KAMATICS · RWG

Aerospace Bearings

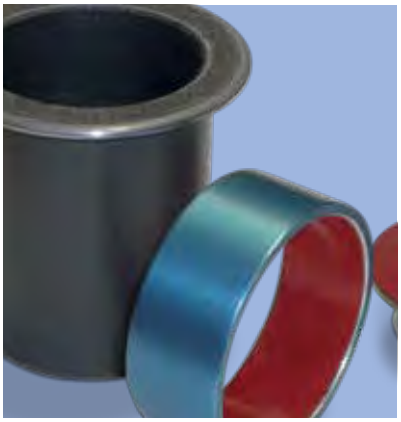

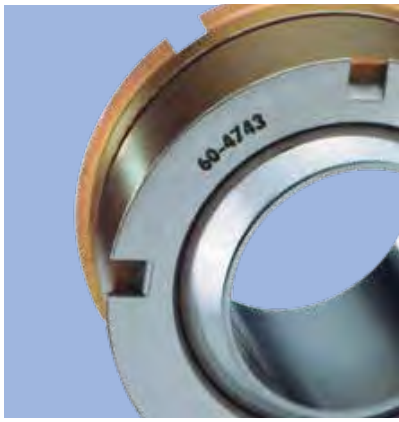

Product Overview

Introduction

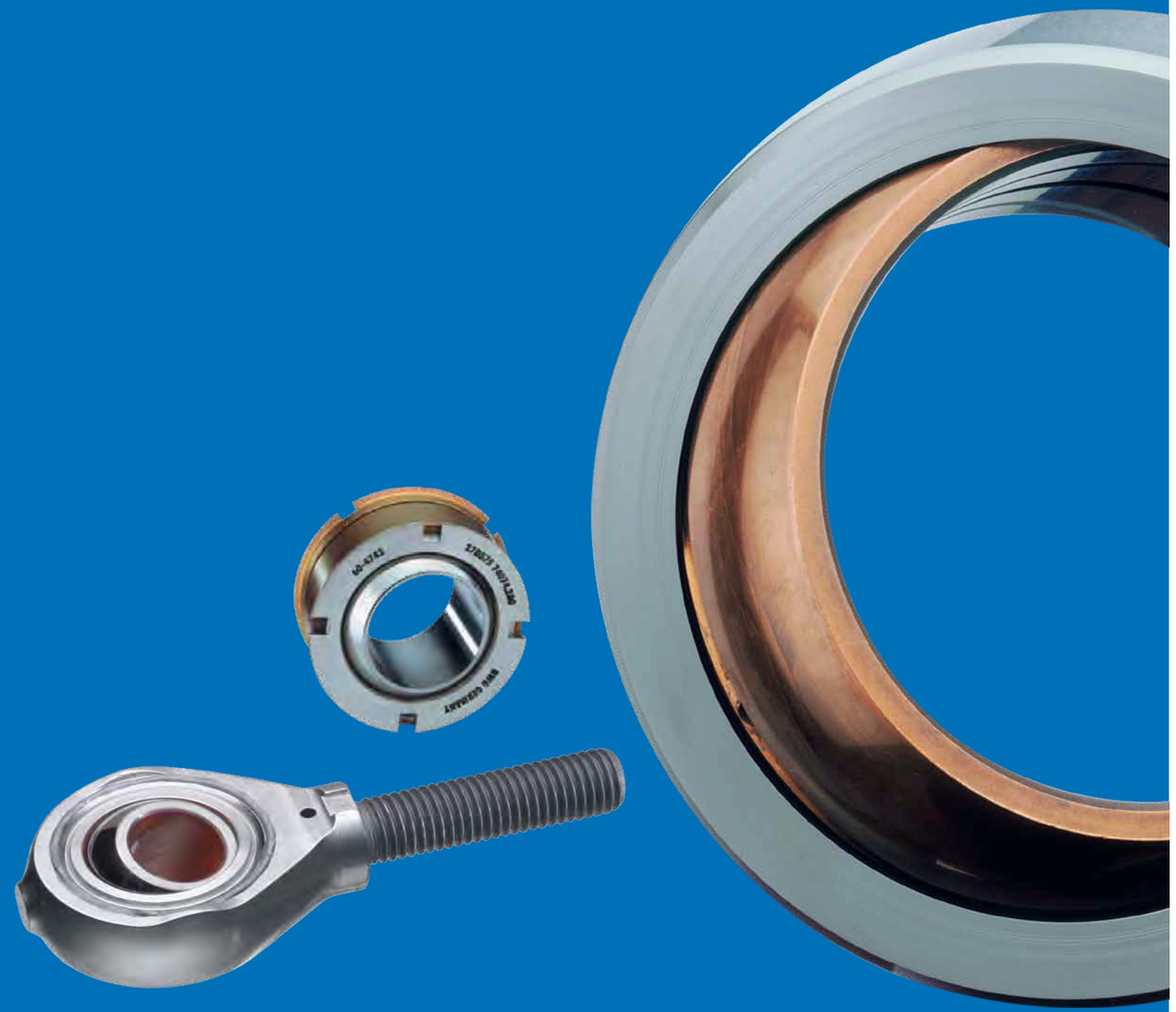

KAMATICS·RWG

Introduction

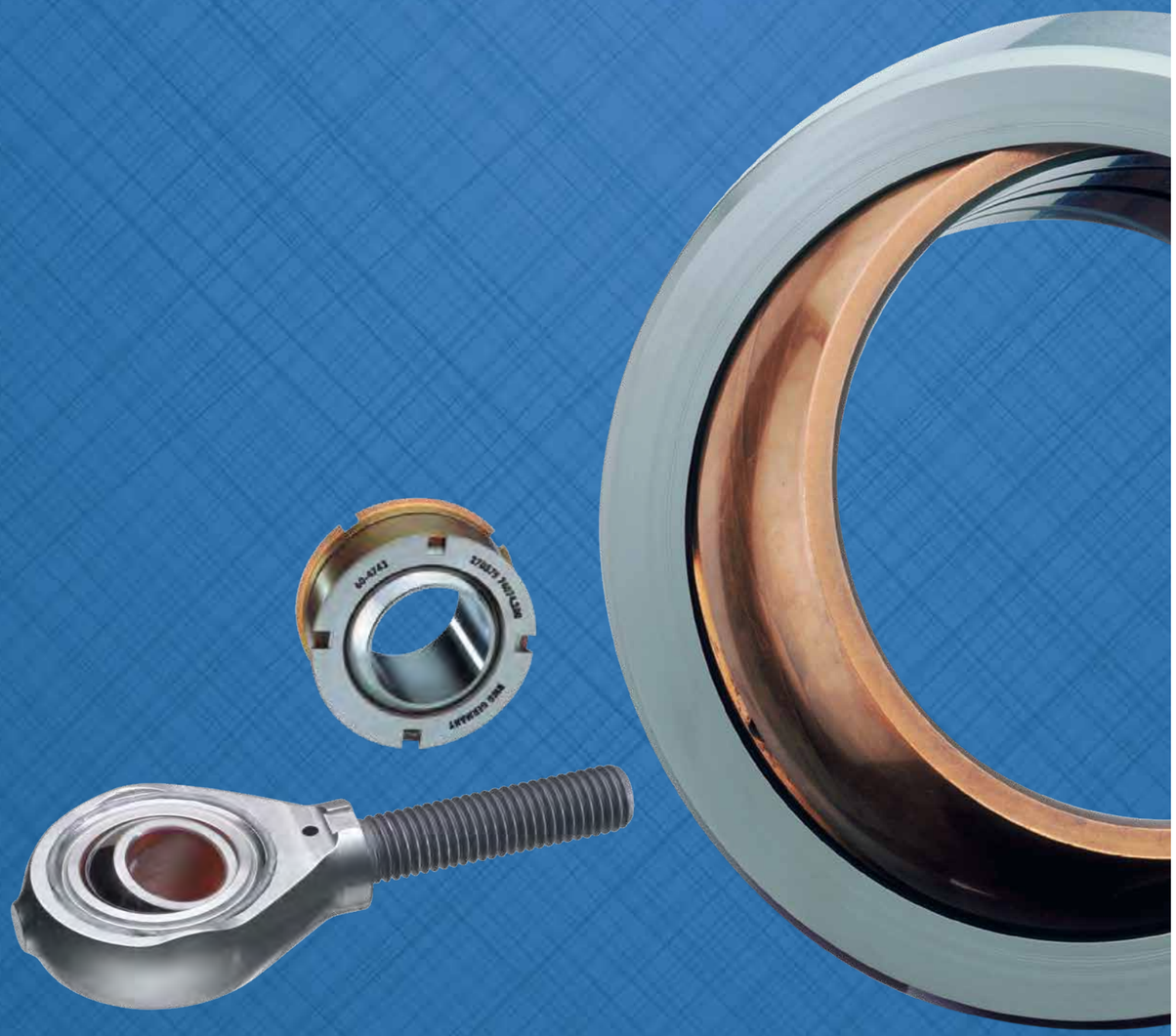

Introduction

KAMATICS · RWG

About

For decades, Kamatics (USA) and RWG (Germany) have been designing, testing, and manufacturing the highest performing bearings and flight critical parts in the industry, excelling under the most demanding conditions. Our proven innovations have kept us in front in our industry and helped clients keep out in front of theirs.

We draw on over 50 years of experience and work hand-in-hand with our customers to tailor the optimal bearing for each application. Our advanced research teams continually test and introduce new technologies and materials to support the evolving demands of the industry.

Our operations perform at the same high level as our products. With facilities in both the USA (Kamatics) and Germany (RWG), it is vital to implement great process and sound automation to ensure quality, reliability, short lead-times, and low cost. At Kaman, we invest heavily in formal training of operators, quality inspectors, engineers, and management personnel.

Our field engineers are on-site all over the globe, providing customers with hands-on, immediate support. We assist in the design of new platforms, help solve problems with legacy platforms, and offer new technologies for future offerings. Our inside sales team and design engineers support field engineering and customers with reports, drawings, technical data and unparalleled service levels.

Introduction

Solutions

Kamatics and RWG develops precision bearings and drive system solutions for demanding aerospace, industrial, hydropower, marine and motorsports applications. Our bearings solve maintenance issues, improve performance, reduce weight, and are engineered to perform in extreme environments.

Rotorcraft

- Rotor Systems and Controls
- Landing Gear and Doors
- Engines and Accessories
- Main Engine and Tail Rotor Driveshaft Systems

Fixed Wing Aircraft

- Flight Controls
- Landing Gear and Doors
- Actuation Systems
- Engine and Accessories

Aftermarket

We are dedicated to supporting our airline and MRO customers by providing world-class service, a state of the art FAA repair station facility, and products readily available from our two authorized distributors.

Space

- Flight Controls
- Power Systems
- Solar Array Deployment Systems
- Hatches and Doors

Marine

- Navigational Lock Systems
- Power Generation Systems
- Steering and Diving Mechanisms
- Water Tight Hatches and Doors

Hydropower

- Gate Systems
- Kaplan Hub Trunnion Wicket Gate Bushing

Oil & Gas

- Down-Hole Drilling
- Oil Sands Shovels
- Risers
- Deck Equipment
- Cranes
- Controllable Pitch Blades

Motorsports

- Steering
- Suspensions

Technologies

Kamatics and RWG products have evolved from the design of 4 base types of bearings to complex high-end bearings. Each one of our bearings is developed, tested, and approved according to the requirements of specific applications.

Self-Lubricating Bearings

Our self-lubricating liner systems have established superior results in providing longer life and lower maintenance costs.

Rolling Element Bearings

Where lowest friction, highest accuracy and higher speeds are required, rolling element bearings are the first choice.

Metal to Metal Bearings

These bearings are traditionally used for high load applications and/or severe environmental conditions such as high or low temperatures.

Flexible Drive Systems

Drive system applications present some of the most challenging and demanding power transmission requirements for flexible coupling elements.

Titanium

In applications that require low overall weight, titanium alloy is a popular choice for a bearing substrate material.

Wear Strips

We offer multiple types of Wear Strips with each providing unique characteristics to prevent metal to metal wear and fretting damage from sliding or rubbing surfaces.

Dry-Film Lubricant

KFL-DM is a unique surface coating that provides durable, lubricious, low friction sliding performance. KFL-DM is a polymer based film coating impregnated with PTFE, and other special fillers.

Introduction
Product Index

Rolling-Element Bearings

PRODUCT	PAGE
EN3045 / EN3046 / EN3047	14-15
EN3281 / EN3282 / EN3283	16-17
EN3284 / EN3285 / EN3286	18-19
EN3287 / EN3288 / EN3289	20-21
EN4033	22-23
FJN	24-25
FT	26-27
ABS0131 / ABS0342	28-29
ABS0132 / ABS0343	30-31
ABS0133 / ABS0344	32-33
ABS0348 / NSA8154	34-35
B500	36-37
MB500	38-39
K / NSA8101 / NSA8111	40-41
K...A / NSA 8102 / NSA8112	42-43
K...B / NSA8103 / NSA8113	44-45
KS	46-47
ABS0136 / ABS0347	48-49
K...BS / NSA8106 / NSA8116	50-51
EN3059 / EN3060 / EN3061	52-53
EN4041	54-55
FTRCE	56-57
FTRCEI	58-59
AGF	60-61
EN3056 / EN3057 / EN3058	62-63
ABS0134 / ABS0345	64-65
ABS0135 / ABS0346	66-67
ABS0363	68-69
DP / NSA8105 / NSA8115	70-71
DP...W	72-73
DS / NSA8104 / NSA8114	74-75
DW	76-77
NSA8124	78-79
EN3053 / EN3054 / EN3055	80-81
EN3290 / EN3291 / EN3292	82-83
DSR / NSA8110	84-85

Spherical Bearings

PRODUCT	PAGE
Fraslip Fabric Liner	
EN4613 R	90-91
EN4613 S	92-93
EN4614 R	94-95
EN4614 S	96-97
FMGB... .4	98-99
FMGN... .4	100-101
FMGS... .4	102-103
FMGU... .4	104-105
EN2584 / FRE	106-107
EN2585 / FLR	108-109
EN3048	110-111
EN4037	112-113
EN4038	114-115
EN4039	116-117
FRA	118-119
Swaged Metal to Metal	
EN2335	120-123
EN4265 / EN4266	124-127
EN6046	128-129
EN6097	130-131
FMGB... .3	132-133
FMGN... .1	134-137
FMGS...	138-141
FMGV... .3	142-143
Loader Slot Metal to Metal	
EN2336	144-147
EN2588	148-151
GE...D	152-155
GE...DN	156-159
GL / GLD	160-163

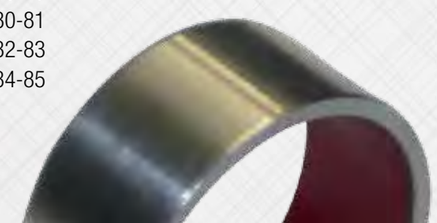

Spherical Bearings Cont.

PRODUCT	PAGE
KAron Molded Liner	
KR-CN / AS14104	164-165
KR-CNG / AS14101	166-167
KR-CW / AS14102	168-169
KR-CWG / AS14103	170-171
KR-CN/4 / AS81820/4	172-173
KR-CNG/1 / AS81820/1	174-175
KR-CW/2 / AS81820/2	176-177
KR-CWG/3 / AS81820/3	178-179
KR-CE (Extended Inner Race / High Misalignment)	180-181
KR-CEG (Extended Inner Race / High Misalignment with Groove)	182-183
KR-C Miniature	184-185

Rod Ends

PRODUCT	PAGE
Ball Bearing	
EN4035	190-191
EN4036	192-193
FC...M / FCN...M	194-195
ASNA2579E	196-197
NSA8159	198-199
REP / RAP	200-201
REP...F	202-203
Metal to Metal	
EN6055	204-207
EN6056	208-209
Fraslip Fabric Liner	
FMW3E_.4 / NSA8143	210-211
FMW3F_.4 / NSA8149	212-213
REM	214-215
REF	216-217

Rod Ends Cont.

PRODUCT	PAGE
KAron Molded Liner	
KR-F / AS81935/2	218-219
KR-M / AS81935/1	220-221
KR-FS / Miniature	222-223
KR-MS / Miniature	224-225

Track Rollers / Cam Followers

PRODUCT	PAGE
KAron Molded Liner	
KRP562 / NAS 562	230-231
KRP567 / KRP 562 with Crowned Outer Race	232-233
KRP502 / AS24465	234-235
KRP503 / AS24466	236-237
KRP522 / KRP 502 with Crowned Outer Race	238-239
KRP523 / Heavy Duty Track Rollers	240-241
KRP527 / Self-Aligning Track Rollers	242-243
KRP505 / AS24461	244-245
KRP506 / AS24462	246-247
KAron Molded Liner Airframe Pivot Bearing	
KRP() Series / AS27640	248-249
KRP() A Series / AS27641	250-251
KRP() B Series / AS27642	252-253
KRP() BS Series / AS27648	254-255
KRP() P Series / AS27644	256-257
KRPB500 / AS27646	258-259

Journal Bearings

PRODUCT	PAGE
Fraslip Fabric Liner	
ABS2041	264-267
ABS2043	268-271
EN4534	272-275
EN4536	276-279
FBPA...A... / FBPA...C...	280-283
FBPA1 / FBPA2	284-285
EN2285	286-289
EN2287	290-293
ABS2042...D	294-297
ABS2042...F	298-301
ABS2044...D	302-305
ABS2044...F	306-309
EN4535 2D	310-313
EN4535 2F	314-317
EN4537 2D	318-321
EN4537 2F	322-325
FBFA...A... / FBFA...C...	326-329
FBFA1 / FBFA2	330-333
NSA8147 / NSA8148	334-337
EN2288	338-341
EN2286	342-345
KAron Molded Liner	
KRJ / AS81934	346-349
KRJ-U / AS81934	350-353

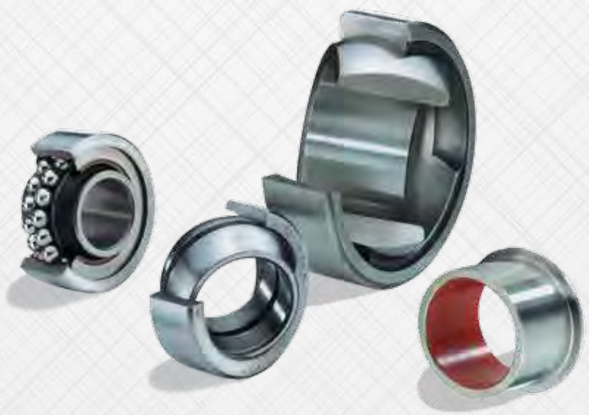

Rolling-Element Bearings

PRODUCT OVERVIEW

KAMATICS·RWG

Rolling-Element Bearings

PRODUCT OVERVIEW

Table of Contents

PRODUCT	PAGE
EN3045 / EN3046 / EN3047	14-15
EN3281 / EN3282 / EN3283	16-17
EN3284 / EN3285 / EN3286	18-19
EN3287 / EN3288 / EN3289	20-21
EN4033	22-23
FJN	24-25
FT	26-27
ABS0131 / ABS0342	28-29
ABS0132 / ABS0343	30-31
ABS0133 / ABS0344	32-33
ABS0348 / NSA8154	34-35
B500	36-37
MB500	38-39
K / NSA8101 / NSA8111	40-41
K...A / NSA 8102 / NSA8112	42-43
K...B / NSA8103 / NSA8113	44-45
KS	46-47
ABS0136 / ABS0347	48-49

PRODUCT	PAGE
K...BS / NSA8106 / NSA8116	50-51
EN3059 / EN3060 / EN3061	52-53
EN4041	54-55
FTRCE	56-57
FTRCEI	58-59
AGF	60-61
EN3056 / EN3057 / EN3058	62-63
ABS0134 / ABS0345	64-65
ABS0135 / ABS0346	66-67
ABS0363	68-69
DP / NSA8105 / NSA8115	70-71
DP...W	72-73
DS / NSA8104 / NSA8114	74-75
DW	76-77
NSA8124	78-79
EN3053 / EN3054 / EN3055	80-81
EN3290 / EN3291 / EN3292	82-83
DSR / NSA8110	84-85

Rolling-Element Bearings

EN3045 / EN3046 / EN3047

- Single Row
- Full Complement

Specifications

Diameter Code	d		Δ dmp		D		Δ Dmp		B		Δ Bmp	
	mm	Inch	mm	Inch	mm	Inch	mm	Inch	mm	Inch	mm	Inch
05	5.000	0.1969	-0.008	-0.0003	16.000	0.6299	-0.008	-0.0003	7.000	0.2756	-0.120	-0.0047
06	6.000	0.2362	-0.008	-0.0003	19.000	0.7480	-0.009	-0.0004	8.000	0.3150	-0.120	-0.0047
08	8.000	0.3150	-0.008	-0.0003	22.000	0.8661	-0.009	-0.0004	9.000	0.3543	-0.120	-0.0047
10	10.000	0.3937	-0.008	-0.0003	26.000	1.0236	-0.009	-0.0004	10.000	0.3937	-0.120	-0.0047
12	12.000	0.4724	-0.008	-0.0003	28.000	1.1024	-0.009	-0.0004	10.000	0.3937	-0.120	-0.0047
15	15.000	0.5906	-0.008	-0.0003	32.000	1.2598	-0.011	-0.0004	11.000	0.4331	-0.120	-0.0047
17	17.000	0.6693	-0.008	-0.0003	35.000	1.3780	-0.011	-0.0004	12.000	0.4724	-0.120	-0.0047
20	20.000	0.7874	-0.010	-0.0004	42.000	1.6535	-0.011	-0.0004	14.000	0.5512	-0.120	-0.0047
25	25.000	0.9843	-0.010	-0.0004	47.000	1.8504	-0.011	-0.0004	14.000	0.5512	-0.120	-0.0047
30	30.000	1.1811	-0.010	-0.0004	55.000	2.1654	-0.013	-0.0005	15.000	0.5906	-0.120	-0.0047

Diameter Code	C		Δ Cmp		d_1 (min.)		r		Δ rmp	
	mm	Inch	mm	Inch	mm	Inch	mm	Inch	mm	Inch
05	5.000	0.1969	-0.120	-0.0047	7.600	0.2992	0.500	0.0197	-0.200 to +0.300	-0.0079 to +0.0118
06	6.000	0.2362	-0.120	-0.0047	8.600	0.3386	0.500	0.0197	-0.200 to +0.300	-0.0079 to +0.0118
08	7.000	0.2756	-0.120	-0.0047	10.600	0.4173	0.500	0.0197	-0.200 to +0.300	-0.0079 to +0.0118
10	8.000	0.3150	-0.120	-0.0047	12.600	0.4961	0.500	0.0197	-0.200 to +0.300	-0.0079 to +0.0118
12	8.000	0.3150	-0.120	-0.0047	14.700	0.5787	0.500	0.0197	-0.200 to +0.300	-0.0079 to +0.0118
15	9.000	0.3543	-0.120	-0.0047	17.700	0.6969	0.500	0.0197	-0.200 to +0.300	-0.0079 to +0.0118
17	10.000	0.3937	-0.120	-0.0047	20.200	0.7953	0.500	0.0197	-0.200 to +0.300	-0.0079 to +0.0118
20	12.000	0.4724	-0.120	-0.0047	23.500	0.9252	0.500	0.0197	-0.200 to +0.300	-0.0079 to +0.0118
25	12.000	0.4724	-0.120	-0.0047	28.600	1.1260	0.500	0.0197	-0.200 to +0.300	-0.0079 to +0.0118
30	13.000	0.5118	-0.120	-0.0047	34.100	1.3425	0.500	0.0197	-0.200 to +0.500	-0.0079 to +0.0197

Schematic Drawing

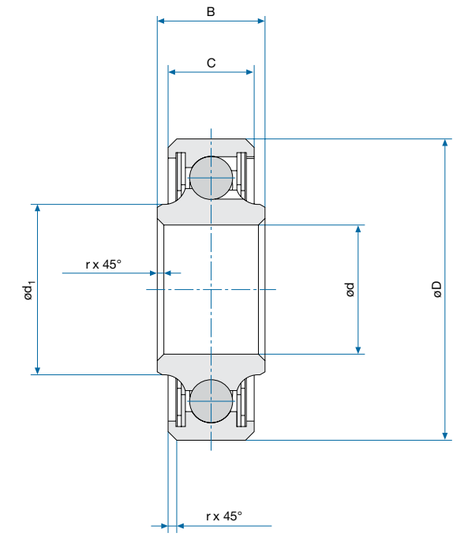

Specifications

EN3045 / EN3046 / EN3047

Diameter Code	Starting Torque Code E / (max.)		Starting Torque Code P / (max.)		Radial Play		Axial Play (max.)		Static Axial Limit Load		Static Radial Limit Load		Weight	
	Ncm	In.-lbs	Ncm	In.-lbs	mm	Inch	mm	Inch	kN	lbs	kN	lbs	g	lbs
05	0.400	0.0354	0.200	0.0177	0.002 to 0.009	0.0001 to 0.0004	0.080	0.0031	3.1	697	6.8	1529	4	0.009
06	0.500	0.0443	0.250	0.0221	0.002 to 0.009	0.0001 to 0.0004	0.080	0.0031	4.2	944	9.2	2068	9	0.020
08	0.650	0.0575	0.300	0.0266	0.002 to 0.009	0.0001 to 0.0004	0.080	0.0031	5.4	1214	11.8	2653	12	0.026
10	0.750	0.0664	0.400	0.0354	0.002 to 0.009	0.0001 to 0.0004	0.080	0.0031	7.7	1731	17.0	3822	21	0.046
12	0.850	0.0752	0.500	0.0443	0.003 to 0.011	0.0001 to 0.0004	0.100	0.0039	8.9	2001	19.5	4384	24	0.053
15	1.000	0.0885	0.600	0.0531	0.003 to 0.011	0.0001 to 0.0004	0.100	0.0039	10.6	2383	23.3	5238	32	0.070
17	1.200	0.1062	0.800	0.0708	0.003 to 0.011	0.0001 to 0.0004	0.100	0.0039	12.2	2743	26.9	6047	42	0.092
20	1.500	0.1328	1.050	0.0929	0.005 to 0.013	0.0002 to 0.0005	0.120	0.0047	18.7	4204	41.2	9262	72	0.158
25	1.800	0.1593	1.350	0.1195	0.005 to 0.013	0.0002 to 0.0005	0.120	0.0047	21.2	4766	46.6	10476	85	0.187
30	2.500	0.2213	1.900	0.1682	0.005 to 0.013	0.0002 to 0.0005	0.120	0.0047	28.5	6407	62.6	14072	123	0.271

Designation

EN3045
Number of Standard

A
Grease Type
A: NATO G 354 / MIL-PRF-23827
B: NATO G 395 / MIL-PRF-81322

20
Diameter Code

E
Protection
E: Sealed
P: Shielded (CRES)

Part Number Example
EN3045 A 20 E

Bearing Materials:

EN3045 Series
EN2031 / 1.3505.9 / AISI E52100

EN3046 Series
EN2031 / 1.3505.9 / AISI E52100
Cadmium Plated Except Bore and raceways

EN3047 Series
EN2030 / 1.3544.9 / AISI 440C

Technical Specification
EN3280

** Inch dimensions are for reference only. | * Permanently marked in non-functional area.*

Contact

USA: KAMATICS CORPORATION 1330 Blue Hills Avenue Bloomfield, CT 06002 USA | **Tel:** +1 860 243 9704 | **E-mail:** KSB@kaman.com
GERMANY: RWG GERMANY GmbH Medbacher Weg 1 D-91315 Höchstadt a. d. Aisch | **Tel:** +49 (91 93) 50105 100 | **E-mail:** RWG@kaman.com

Rolling-Element Bearings

EN3281 / EN3282 / EN3283

- Single Row
- Full Complement

Specifications

Diameter Code	d		Δ dmp		D		Δ Dmp		B		Δ Bmp	
	mm	Inch	mm	Inch	mm	Inch	mm	Inch	mm	Inch	mm	Inch
10	10.000	0.3937	-0.008	-0.0003	22.000	0.8661	-0.009	-0.0004	6.000	0.2362	-0.120	-0.0047
12	12.000	0.4724	-0.008	-0.0003	24.000	0.9449	-0.009	-0.0004	6.000	0.2362	-0.120	-0.0047
15	15.000	0.5906	-0.008	-0.0003	28.000	1.1024	-0.009	-0.0004	7.000	0.2756	-0.120	-0.0047
17	17.000	0.6693	-0.008	-0.0003	30.000	1.1811	-0.009	-0.0004	7.000	0.2756	-0.120	-0.0047
20	20.000	0.7874	-0.010	-0.0004	32.000	1.2598	-0.011	-0.0004	7.000	0.2756	-0.120	-0.0047
25	25.000	0.9843	-0.010	-0.0004	37.000	1.4567	-0.011	-0.0004	7.000	0.2756	-0.120	-0.0047
30	30.000	1.1811	-0.010	-0.0004	42.000	1.6535	-0.011	-0.0004	7.000	0.2756	-0.120	-0.0047
35	35.000	1.3780	-0.012	-0.0005	47.000	1.8504	-0.011	-0.0004	7.000	0.2756	-0.120	-0.0047
40	40.000	1.5748	-0.012	-0.0005	52.000	2.0472	-0.013	-0.0005	7.000	0.2756	-0.120	-0.0047
50	50.000	1.9685	-0.012	-0.0005	65.000	2.5591	-0.013	-0.0005	7.000	0.2756	-0.120	-0.0047
60	60.000	2.3622	-0.015	-0.0006	78.000	3.0709	-0.013	-0.0005	10.000	0.3937	-0.120	-0.0047

Diameter Code	d_1 (min.)		r		Δ rmp		Starting Torque Code P / (max.)		Starting Torque Code E / (max.)	
	mm	Inch	mm	Inch	mm	Inch	Ncm	In.-lbs	Ncm	In.-lbs
10	13.000	0.5118	0.500	0.0197	-0.200 to +0.300	-0.0079 to +0.0118	1.200	0.1062	0.450	0.0398
12	15.000	0.5906	0.500	0.0197	-0.200 to +0.300	-0.0079 to +0.0118	1.300	0.1151	0.500	0.0443
15	17.600	0.6929	0.500	0.0197	-0.200 to +0.300	-0.0079 to +0.0118	1.400	0.1239	0.550	0.0487
17	19.600	0.7717	0.500	0.0197	-0.200 to +0.300	-0.0079 to +0.0118	1.500	0.1328	0.600	0.0531
20	23.000	0.9055	0.500	0.0197	-0.200 to +0.300	-0.0079 to +0.0118	1.600	0.1416	0.650	0.0575
25	28.100	1.1063	0.500	0.0197	-0.200 to +0.300	-0.0079 to +0.0118	1.800	0.1593	0.850	0.0752
30	33.100	1.3031	0.500	0.0197	-0.200 to +0.300	-0.0079 to +0.0118	2.000	0.1770	1.400	0.1239
35	38.300	1.5079	0.500	0.0197	-0.200 to +0.300	-0.0079 to +0.0118	2.300	0.2036	1.800	0.1593
40	43.300	1.7047	0.500	0.0197	-0.200 to +0.300	-0.0079 to +0.0118	2.900	0.2567	2.200	0.1947
50	53.000	2.0866	0.500	0.0197	-0.200 to +0.300	-0.0079 to +0.0118	4.700	0.4160	3.200	0.2832
60	63.500	2.5000	0.500	0.0197	-0.200 to +0.300	-0.0079 to +0.0118	7.700	0.6815	5.500	0.4868

Schematic Drawing

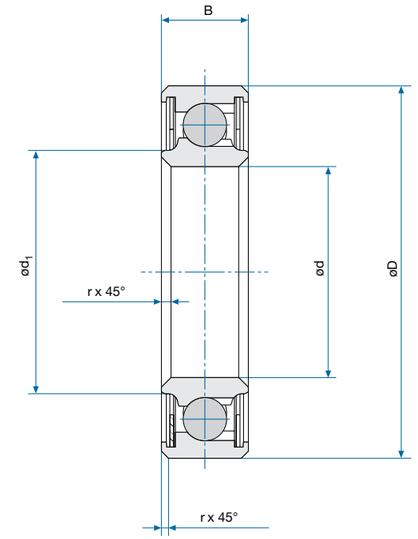

Specifications

EN3281 / EN3282 / EN3283

Diameter Code	Radial Play		Axial Play (max.)		Static Axial Limit Load		Static Radial Limit Load		Weight	
	mm	Inch	mm	Inch	kN	lbs	kN	lbs	g	lbs
10	0.002 to 0.013	0.0001 to 0.0005	0.100	0.0039	4.8	1079	10.6	2383	11	0.024
12	0.003 to 0.018	0.0001 to 0.0007	0.100	0.0039	5.6	1259	12.3	2765	13	0.029
15	0.003 to 0.018	0.0001 to 0.0007	0.100	0.0039	7.4	1664	16.2	3642	16	0.035
17	0.003 to 0.018	0.0001 to 0.0007	0.100	0.0039	8.0	1798	17.6	3956	18	0.040
20	0.005 to 0.020	0.0002 to 0.0008	0.100	0.0039	7.9	1776	17.3	3889	20	0.044
25	0.005 to 0.020	0.0002 to 0.0008	0.100	0.0039	9.8	2203	21.5	4833	23	0.051
30	0.005 to 0.020	0.0002 to 0.0008	0.100	0.0039	11.1	2495	24.5	5508	26	0.057
35	0.006 to 0.020	0.0002 to 0.0005	0.100	0.0039	12.9	2900	28.4	6384	30	0.066
40	0.006 to 0.020	0.0002 to 0.0005	0.100	0.0039	14.5	3260	31.8	7149	38	0.084
50	0.006 to 0.023	0.0002 to 0.0009	0.120	0.0047	19.6	4406	43.1	9689	55	0.121
60	0.008 to 0.028	0.0002 to 0.0011	0.150	0.0059	31.8	7149	70.0	15736	100	0.220

Designation

EN3281
Number of Standard

A
Grease Type
A: NATO G 354 / MIL-PRF-23827
B: NATO G 395 / MIL-PRF-81322

20
Diameter Code

E
Protection
E: Sealed
P: Shielded (CRES)

Part Number Example
EN3281 A 20 E

Bearing Materials:

EN3281 Series
EN2031 / AISI E52100

EN3282 Series
EN2031 / AISI E52100 Cadmium Plated Except Bore and raceways

EN3283 Series
EN2030 / AISI 440C

Technical Specification
EN3280

** Inch dimensions are for reference only. | * Permanently marked in non-functional area.*

Contact

USA: KAMATICS CORPORATION 1330 Blue Hills Avenue Bloomfield, CT 06002 USA | **Tel:** +1 860 243 9704 | **E-mail:** KSB@kaman.com
GERMANY: RWG GERMANY GmbH Medbacher Weg 1 D-91315 Höchstadt a. d. Aisch | **Tel:** +49 (91 93) 50105 100 | **E-mail:** RWG@kaman.com

Rolling-Element Bearings

EN3284 / EN3285 / EN3286

- Single Row
- Full Complement

Specifications

Diameter Code	d		Δ dmp		D		Δ Dmp		B		Δ Bmp	
	mm	Inch	mm	Inch	mm	Inch	mm	Inch	mm	Inch	mm	Inch
05	5.000	0.1969	-0.008	-0.0003	16.000	0.6299	-0.008	-0.0003	7.000	0.2756	-0.120	-0.0047
06	6.000	0.2362	-0.008	-0.0003	19.000	0.7480	-0.009	-0.0004	8.000	0.3150	-0.120	-0.0047
08	8.000	0.3150	-0.008	-0.0003	22.000	0.8661	-0.009	-0.0004	9.000	0.3543	-0.120	-0.0047
10	10.000	0.3937	-0.008	-0.0003	26.000	1.0236	-0.009	-0.0004	10.000	0.3937	-0.120	-0.0047
12	12.000	0.4724	-0.008	-0.0003	28.000	1.1024	-0.009	-0.0004	10.000	0.3937	-0.120	-0.0047
15	15.000	0.5906	-0.008	-0.0003	32.000	1.2598	-0.011	-0.0004	11.000	0.4331	-0.120	-0.0047
17	17.000	0.6693	-0.008	-0.0003	35.000	1.3780	-0.011	-0.0004	12.000	0.4724	-0.120	-0.0047
20	20.000	0.7874	-0.010	-0.0004	42.000	1.6535	-0.011	-0.0004	14.000	0.5512	-0.120	-0.0047
25	25.000	0.9843	-0.010	-0.0004	47.000	1.8504	-0.011	-0.0004	14.000	0.5512	-0.120	-0.0047
30	30.000	1.1811	-0.010	-0.0004	55.000	2.1654	-0.013	-0.0005	15.000	0.5906	-0.120	-0.0047

Diameter Code	C		Δ Cmp		d_1 (min.)		r		Δ rmp		Weight	
	mm	Inch	mm	Inch	mm	Inch	mm	Inch	mm	Inch	g	lbs
05	5.000	0.1969	-0.120	-0.0047	7.600	0.2992	0.500	0.0197	-0.200 to +0.300	-0.0079 to +0.0118	4	0.009
06	6.000	0.2362	-0.120	-0.0047	8.600	0.3386	0.500	0.0197	-0.200 to +0.300	-0.0079 to +0.0118	9	0.020
08	7.000	0.2756	-0.120	-0.0047	10.600	0.4173	0.500	0.0197	-0.200 to +0.300	-0.0079 to +0.0118	12	0.026
10	8.000	0.3150	-0.120	-0.0047	12.600	0.4961	0.500	0.0197	-0.200 to +0.300	-0.0079 to +0.0118	21	0.046
12	8.000	0.3150	-0.120	-0.0047	14.700	0.5787	0.500	0.0197	-0.200 to +0.300	-0.0079 to +0.0118	24	0.053
15	9.000	0.3543	-0.120	-0.0047	17.700	0.6969	0.500	0.0197	-0.200 to +0.300	-0.0079 to +0.0118	32	0.070
17	10.000	0.3937	-0.120	-0.0047	20.200	0.7953	0.500	0.0197	-0.200 to +0.300	-0.0079 to +0.0118	42	0.092
20	12.000	0.4724	-0.120	-0.0047	23.500	0.9252	0.500	0.0197	-0.200 to +0.300	-0.0079 to +0.0118	72	0.158
25	12.000	0.4724	-0.120	-0.0047	28.600	1.1260	0.500	0.0197	-0.200 to +0.300	-0.0079 to +0.0118	85	0.187
30	13.000	0.5118	-0.120	-0.0047	34.100	1.3425	0.500	0.0197	-0.200 to +0.500	-0.0079 to +0.0197	123	0.271

Schematic Drawing

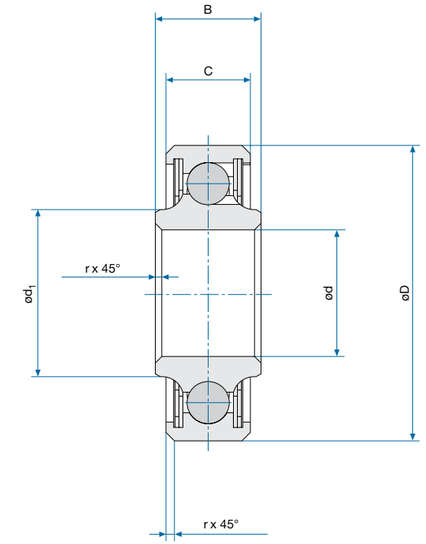

Specifications

EN3284 / EN3285 / EN3286

Diameter Code	Starting Torque Code E / (max.)		Starting Torque Code P / (max.)		Radial Play		Axial Play (max.)		Static Axial Limit Load		Static Radial Limit Load	
	Ncm	In.-lbs	Ncm	In.-lbs	mm	Inch	mm	Inch	kN	lbs	kN	lbs
05	0.400	0.0354	0.200	0.0177	0.002 to 0.013	0.0001 to 0.0005	0.100	0.0039	3.1	697	6.8	1529
06	0.500	0.0443	0.250	0.0221	0.002 to 0.013	0.0001 to 0.0005	0.100	0.0039	4.2	944	9.2	2068
08	0.650	0.0575	0.300	0.0266	0.002 to 0.013	0.0001 to 0.0005	0.100	0.0039	5.4	1214	11.8	2653
10	0.750	0.0664	0.400	0.0354	0.002 to 0.013	0.0001 to 0.0005	0.100	0.0039	7.7	1731	17.0	3822
12	0.850	0.0752	0.500	0.0443	0.003 to 0.018	0.0001 to 0.0007	0.120	0.0047	8.9	2001	19.5	4384
15	1.000	0.0885	0.600	0.0531	0.003 to 0.018	0.0001 to 0.0007	0.120	0.0047	10.6	2383	23.3	5238
17	1.200	0.1062	0.800	0.0708	0.003 to 0.018	0.0001 to 0.0007	0.120	0.0047	12.2	2743	26.9	6047
20	1.500	0.1328	1.050	0.0929	0.005 to 0.020	0.0002 to 0.0008	0.120	0.0047	18.1	4069	41.2	9262
25	1.800	0.1593	1.350	0.1195	0.005 to 0.020	0.0002 to 0.0008	0.120	0.0047	21.2	4766	46.6	10476
30	2.500	0.2213	1.900	0.1682	0.005 to 0.020	0.0002 to 0.0008	0.150	0.0059	28.5	6407	62.6	14072

Designation

EN3284
Number of Standard

A
Grease Type
A: NATO G 354 / MIL-PRF-23827
B: NATO G 395 / MIL-PRF-81322

20
Diameter Code

E
Protection
E: Sealed
P: Shielded (CRES)

Part Number Example
EN3284 A 20 E

Bearing Materials:

EN3284 Series
EN2031 / AISI E52100

EN3285 Series
EN2031 / AISI E52100
Cadmium Plated Except Bore

EN3286 Series
EN2030 / AISI 440C

Technical Specification
EN3280

** Inch dimensions are for reference only. | * Permanently marked in non-functional area.*

Contact

USA: KAMATICS CORPORATION 1330 Blue Hills Avenue Bloomfield, CT 06002 USA | **Tel:** +1 860 243 9704 | **E-mail:** KSB@kaman.com
GERMANY: RWG GERMANY GmbH Medbacher Weg 1 D-91315 Höchstadt a. d. Aisch | **Tel:** +49 (91 93) 50105 100 | **E-mail:** RWG@kaman.com

Rolling-Element Bearings

EN3287 / EN3288 / EN3289

- Self-Aligning
- Full Complement
- Double Row

Specifications

Diameter Code	d		Δ dmp		D		Δ Dmp		B		Δ Bmp	
	mm	Inch	mm	Inch	mm	Inch	mm	Inch	mm	Inch	mm	Inch
05	5.000	0.1969	-0.008	-0.0003	16.000	0.6299	-0.008	-0.0003	12.000	0.4724	-0.120	-0.0047
06	6.000	0.2362	-0.008	-0.0003	19.000	0.7480	-0.009	-0.0004	14.000	0.5512	-0.120	-0.0047
08	8.000	0.3150	-0.008	-0.0003	24.000	0.9449	-0.009	-0.0004	15.000	0.5906	-0.120	-0.0047
10	10.000	0.3937	-0.008	-0.0003	30.000	1.1811	-0.009	-0.0004	20.000	0.7874	-0.120	-0.0047
12	12.000	0.4724	-0.008	-0.0003	32.000	1.2598	-0.011	-0.0004	20.000	0.7874	-0.120	-0.0047
15	15.000	0.5906	-0.008	-0.0003	35.000	1.3780	-0.011	-0.0004	20.000	0.7874	-0.120	-0.0047
17	17.000	0.6693	-0.008	-0.0003	40.000	1.5748	-0.011	-0.0004	22.000	0.8661	-0.120	-0.0047
20	20.000	0.7874	-0.010	-0.0004	47.000	1.8504	-0.011	-0.0004	24.000	0.9449	-0.120	-0.0047

Diameter Code	C		Δ Cmp		d_1 (min.)		r		Δ rmp	
	mm	Inch	mm	Inch	mm	Inch	mm	Inch	mm	Inch
05	8.000	0.3150	-0.120	-0.0047	7.600	0.2992	0.500	0.0197	-0.200 to +0.300	-0.0079 to +0.0118
06	10.000	0.3937	-0.120	-0.0047	8.600	0.3386	0.500	0.0197	-0.200 to +0.300	-0.0079 to +0.0118
08	10.000	0.3937	-0.120	-0.0047	11.100	0.4370	0.500	0.0197	-0.200 to +0.300	-0.0079 to +0.0118
10	14.000	0.5512	-0.120	-0.0047	13.600	0.5354	0.500	0.0197	-0.200 to +0.300	-0.0079 to +0.0118
12	14.000	0.5512	-0.120	-0.0047	15.400	0.6063	0.500	0.0197	-0.200 to +0.300	-0.0079 to +0.0118
15	14.000	0.5512	-0.120	-0.0047	18.500	0.7283	0.500	0.0197	-0.200 to +0.300	-0.0079 to +0.0118
17	16.000	0.6299	-0.120	-0.0047	21.200	0.8346	0.500	0.0197	-0.200 to +0.300	-0.0079 to +0.0118
20	18.000	0.7087	-0.120	-0.0047	23.600	0.9291	0.500	0.0197	-0.200 to +0.300	-0.0079 to +0.0118

Diameter Code	Starting Torque Code E / (max.)		Starting Torque Code P / (max.)		Radial Play Code R		Radial Play Code N	
	Ncm	In.-lbs	Ncm	In.-lbs	mm	Inch	mm	Inch
05	0.800	0.0708	0.400	0.0354	0.002 to 0.006	0.0001 to 0.0002	0.002 to 0.013	0.0001 to 0.0005
06	0.900	0.0797	0.450	0.0398	0.002 to 0.006	0.0001 to 0.0002	0.002 to 0.013	0.0001 to 0.0005
08	1.000	0.0885	0.550	0.0487	0.002 to 0.007	0.0001 to 0.0003	0.002 to 0.013	0.0001 to 0.0005
10	1.200	0.1062	0.750	0.0664	0.002 to 0.007	0.0001 to 0.0003	0.002 to 0.013	0.0001 to 0.0005
12	1.400	0.1239	0.900	0.0797	0.003 to 0.009	0.0001 to 0.0004	0.003 to 0.018	0.0001 to 0.0007
15	1.800	0.1593	1.200	0.1062	0.003 to 0.009	0.0001 to 0.0004	0.003 to 0.018	0.0001 to 0.0007
17	2.500	0.2213	1.800	0.1593	0.003 to 0.009	0.0001 to 0.0004	0.003 to 0.018	0.0001 to 0.0007
20	3.500	0.3098	2.300	0.2036	0.005 to 0.010	0.0002 to 0.0004	0.005 to 0.020	0.0002 to 0.0008

Schematic Drawing

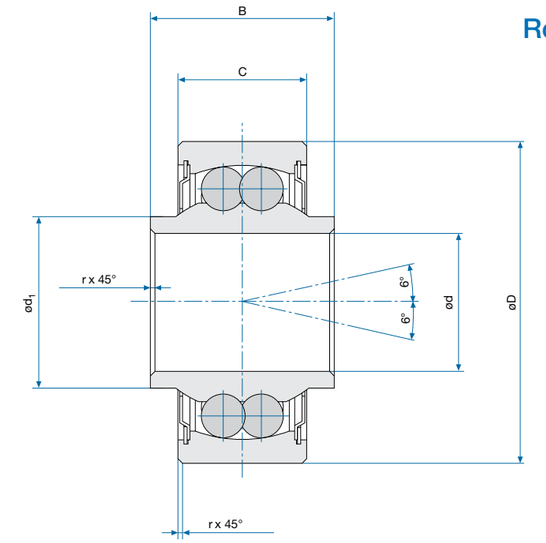

Specifications

EN3287 / EN3288 / EN3289

Diameter Code	Radial Play Code L		Axial Play Code R / (max.)		Axial Play Code N/L / (max.)		Static Axial Limit Load		Static Radial Limit Load		Weight	
	mm	Inch	mm	Inch	mm	Inch	kN	lbs	kN	lbs	g	lbs
05	0.010 to 0.020	0.0004 to 0.0008	0.070	0.0028	0.100	0.0039	1.2	270	3.7	832	9	0.020
06	0.010 to 0.020	0.0004 to 0.0008	0.070	0.0028	0.100	0.0039	1.8	405	5.7	1281	14	0.031
08	0.010 to 0.020	0.0004 to 0.0008	0.080	0.0031	0.100	0.0039	2.8	629	9.1	2046	30	0.066
10	0.010 to 0.020	0.0004 to 0.0008	0.080	0.0031	0.120	0.0047	4.4	989	14.1	3170	57	0.125
12	0.013 to 0.023	0.0005 to 0.0009	0.080	0.0031	0.120	0.0047	5.0	1124	16.1	3619	62	0.136
15	0.013 to 0.023	0.0005 to 0.0009	0.080	0.0031	0.120	0.0047	5.9	1326	18.8	4226	75	0.165
17	0.013 to 0.023	0.0005 to 0.0009	0.080	0.0031	0.160	0.0063	7.6	1708	24.3	5463	110	0.242
20	0.015 to 0.025	0.0006 to 0.0010	0.080	0.0031	0.180	0.0071	10.2	2293	32.6	7328	170	0.374

Designation

EN3287
Number of Standard

A
Grease Type
A: NATO G 354 / MIL-PRF-23827
B: NATO G 395 / MIL-PRF-81322

N
Radial / Axial Play
N: Normal
L: Group 3
R: Special

20
Diameter Code

E
Protection
E: Sealed
P: Shielded (CRES)

Part Number Example
EN3287 A N 20 E

Bearing Materials:

EN3287 Series
EN2031 / AISI E52100

EN3288 Series
EN2031 / AISI E52100
Cadmium Plated Except Bore

EN3289 Series
EN2030 / AISI 440C

Technical Specification
EN3280

** Inch dimensions are for reference only. | * Permanently marked in non-functional area.*

Contact

USA: KAMATICS CORPORATION 1330 Blue Hills Avenue Bloomfield, CT 06002 USA | **Tel:** +1 860 243 9704 | **E-mail:** KSB@kaman.com
GERMANY: RWG GERMANY GmbH Medbacher Weg 1 D-91315 Höchstadt a. d. Aisch | **Tel:** +49 (91 93) 50105 100 | **E-mail:** RWG@kaman.com

Rolling-Element Bearings

EN4033

- Single Row
- Full Complement

Specifications

Diameter Code	d		Δ dmp		D		Δ Dmp		B		Δ Bmp	
	mm	Inch	mm	Inch	mm	Inch	mm	Inch	mm	Inch	mm	Inch
10	10.000	0.3937	-0.008	-0.0003	22.000	0.8661	-0.009	-0.0004	6.000	0.2362	-0.120	-0.0047
12	12.000	0.4724	-0.008	-0.0003	24.000	0.9449	-0.009	-0.0004	6.000	0.2362	-0.120	-0.0047
15	15.000	0.5906	-0.008	-0.0003	28.000	1.1024	-0.009	-0.0004	7.000	0.2756	-0.120	-0.0047
17	17.000	0.6693	-0.008	-0.0003	30.000	1.1811	-0.009	-0.0004	7.000	0.2756	-0.120	-0.0047
20	20.000	0.7874	-0.010	-0.0004	32.000	1.2598	-0.011	-0.0004	7.000	0.2756	-0.120	-0.0047
25	25.000	0.9843	-0.010	-0.0004	37.000	1.4567	-0.011	-0.0004	7.000	0.2756	-0.120	-0.0047
30	30.000	1.1811	-0.010	-0.0004	42.000	1.6535	-0.011	-0.0004	7.000	0.2756	-0.120	-0.0047
35	35.000	1.3780	-0.012	-0.0005	47.000	1.8504	-0.011	-0.0004	7.000	0.2756	-0.120	-0.0047
40	40.000	1.5748	-0.012	-0.0005	52.000	2.0472	-0.013	-0.0005	7.000	0.2756	-0.120	-0.0047
50	50.000	1.9685	-0.012	-0.0005	65.000	2.5591	-0.013	-0.0005	7.000	0.2756	-0.120	-0.0047
60	60.000	2.3622	-0.015	-0.0006	78.000	3.0709	-0.013	-0.0005	10.000	0.3937	-0.120	-0.0047

Diameter Code	d_1 (min.)		r		Δ rmp		Starting Torque Code E / (max.)		Starting Torque Code P / (max.)	
	mm	Inch	mm	Inch	mm	Inch	Ncm	In.-lbs	Ncm	In.-lbs
10	13.000	0.5118	0.500	0.0197	-0.200 to +0.300	-0.0079 to +0.0118	1.200	0.1062	0.450	0.0398
12	15.000	0.5906	0.500	0.0197	-0.200 to +0.300	-0.0079 to +0.0118	1.300	0.1151	0.500	0.0443
15	17.600	0.6929	0.500	0.0197	-0.200 to +0.300	-0.0079 to +0.0118	1.400	0.1239	0.550	0.0487
17	19.600	0.7717	0.500	0.0197	-0.200 to +0.300	-0.0079 to +0.0118	1.500	0.1328	0.600	0.0531
20	23.000	0.9055	0.500	0.0197	-0.200 to +0.300	-0.0079 to +0.0118	1.600	0.1416	0.650	0.0575
25	28.100	1.1063	0.500	0.0197	-0.200 to +0.300	-0.0079 to +0.0118	1.800	0.1593	0.850	0.0752
30	33.100	1.3031	0.500	0.0197	-0.200 to +0.300	-0.0079 to +0.0118	2.000	0.1770	1.400	0.1239
35	38.300	1.5079	0.500	0.0197	-0.200 to +0.300	-0.0079 to +0.0118	2.300	0.2036	1.800	0.1593
40	43.300	1.7047	0.500	0.0197	-0.200 to +0.300	-0.0079 to +0.0118	2.900	0.2567	2.200	0.1947
50	53.000	2.0866	0.500	0.0197	-0.200 to +0.300	-0.0079 to +0.0118	4.700	0.4160	3.200	0.2832
60	63.500	2.5000	0.500	0.0197	-0.200 to +0.300	-0.0079 to +0.0118	7.700	0.6815	5.500	0.4868

Schematic Drawing

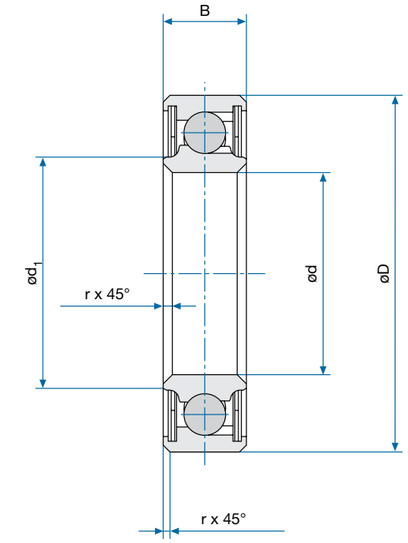

Specifications

EN4033

Diameter Code	Radial Play		Axial Play (max.)		Static Axial Limit Load		Static Radial Limit Load		Weight	
	mm	Inch	mm	Inch	kN	lbs	kN	lbs	g	lbs
10	0.002 to 0.007	0.0001 to 0.0003	0.100	0.0039	4.8	1079	10.6	2383	11	0.024
12	0.002 to 0.007	0.0001 to 0.0003	0.100	0.0039	5.6	1259	12.3	2765	13	0.029
15	0.002 to 0.007	0.0001 to 0.0003	0.100	0.0039	7.4	1664	16.2	3642	16	0.035
17	0.002 to 0.007	0.0001 to 0.0003	0.100	0.0039	8.0	1798	17.6	3956	18	0.040
20	0.002 to 0.009	0.0001 to 0.0004	0.100	0.0039	7.5	1686	17.3	3889	20	0.044
25	0.002 to 0.009	0.0001 to 0.0004	0.100	0.0039	9.8	2203	21.5	4833	23	0.051
30	0.002 to 0.009	0.0001 to 0.0004	0.100	0.0039	11.1	2495	24.5	5508	26	0.057
35	0.002 to 0.009	0.0001 to 0.0004	0.100	0.0039	12.9	2900	28.4	6384	30	0.066
40	0.002 to 0.009	0.0001 to 0.0004	0.100	0.0039	14.5	3260	31.8	7149	38	0.084
50	0.002 to 0.009	0.0001 to 0.0004	0.120	0.0047	15.6	3507	43.1	9689	55	0.121
60	0.002 to 0.009	0.0001 to 0.0004	0.150	0.0059	31.8	7149	70.0	15736	100	0.220

Designation

EN4033
Number of Standard

A
Grease Type
A: NATO G 354 / MIL-PRF-23827
B: NATO G 395 / MIL-PRF-81322

20
Diameter Code

E
Protection
E: Sealed
P: Shielded (CRES)

T
Surface Treatment
No Code: None
T: Passivated

Part Number Example
EN4033 A 20 E T

Bearing Materials:

Material
EN2030 / AISI 440C

Technical Specification
EN3280

** Inch dimensions are for reference only. | * Permanently marked in non-functional area.*

Contact

USA: KAMATICS CORPORATION 1330 Blue Hills Avenue Bloomfield, CT 06002 USA | **Tel:** +1 860 243 9704 | **E-mail:** KSB@kaman.com
GERMANY: RWG GERMANY GmbH Medbacher Weg 1 D-91315 Höchstadt a. d. Aisch | **Tel:** +49 (91 93) 50105 100 | **E-mail:** RWG@kaman.com

Rolling-Element Bearings

FJN

- Single Row
- Full Complement

Specifications

Diameter Code	d		Δ dmp		D		Δ Dmp		B		Δ Bmp	
	mm	Inch	mm	Inch	mm	Inch	mm	Inch	mm	Inch	mm	Inch
FJN5	5.000	0.1969	-0.008	-0.0003	16.000	0.6299	-0.008	-0.0003	7.000	0.2756	-0.120	-0.0047
FJN6	6.000	0.2362	-0.008	-0.0003	19.000	0.7480	-0.009	-0.0004	8.000	0.3150	-0.120	-0.0047
FJN8	8.000	0.3150	-0.008	-0.0003	22.000	0.8661	-0.009	-0.0004	11.000	0.4331	-0.120	-0.0047
FJN10	10.000	0.3937	-0.008	-0.0003	26.000	1.0236	-0.009	-0.0004	12.000	0.4724	-0.120	-0.0047
FJN12	12.000	0.4724	-0.008	-0.0003	28.000	1.1024	-0.009	-0.0004	12.000	0.4724	-0.120	-0.0047
FJN15	15.000	0.5906	-0.008	-0.0003	32.000	1.2598	-0.011	-0.0004	13.000	0.5118	-0.120	-0.0047
FJN17	17.000	0.6693	-0.008	-0.0003	35.000	1.3780	-0.011	-0.0004	14.000	0.5512	-0.120	-0.0047
FJN20	20.000	0.7874	-0.010	-0.0004	42.000	1.6535	-0.011	-0.0004	16.000	0.6299	-0.120	-0.0047
FJN25	25.000	0.9843	-0.010	-0.0004	47.000	1.8504	-0.011	-0.0004	16.000	0.6299	-0.120	-0.0047
FJN30	30.000	1.1811	-0.010	-0.0004	55.000	2.1654	-0.013	-0.0005	19.000	0.7480	-0.120	-0.0047

Diameter Code	C		Δ Cmp		d_1 (min.)		r		Δ rmp	
	mm	Inch	mm	Inch	mm	Inch	mm	Inch	mm	Inch
FJN5	5.000	0.1969	-0.120	-0.0047	7.200	0.2835	0.500	0.0197	-0.200 to +0.300	-0.0079 to +0.0118
FJN6	6.000	0.2362	-0.120	-0.0047	9.200	0.3622	0.500	0.0197	-0.200 to +0.300	-0.0079 to +0.0118
FJN8	7.000	0.2756	-0.120	-0.0047	10.400	0.4094	0.500	0.0197	-0.200 to +0.300	-0.0079 to +0.0118
FJN10	8.000	0.3150	-0.120	-0.0047	13.000	0.5118	0.500	0.0197	-0.200 to +0.300	-0.0079 to +0.0118
FJN12	8.000	0.3150	-0.120	-0.0047	19.800	0.7795	0.500	0.0197	-0.200 to +0.300	-0.0079 to +0.0118
FJN15	9.000	0.3543	-0.120	-0.0047	17.900	0.7047	0.500	0.0197	-0.200 to +0.300	-0.0079 to +0.0118
FJN17	10.000	0.3937	-0.120	-0.0047	20.500	0.8071	0.500	0.0197	-0.200 to +0.300	-0.0079 to +0.0118
FJN20	12.000	0.4724	-0.120	-0.0047	23.350	0.9193	0.500	0.0197	-0.200 to +0.500	-0.0079 to +0.0197
FJN25	12.000	0.4724	-0.120	-0.0047	29.400	1.1575	0.500	0.0197	-0.200 to +0.500	-0.0079 to +0.0197
FJN30	13.000	0.5118	-0.120	-0.0047	35.200	1.3858	0.500	0.0197	-0.200 to +0.500	-0.0079 to +0.0197

Schematic Drawing

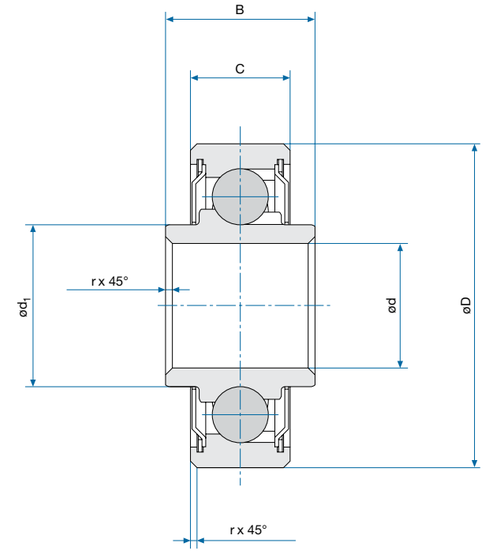

Specifications

FJN

Diameter Code	Starting Torque No Code / (max.)		Starting Torque Code E / (max.)		Radial Play		Static Radial Limit Load		Weight	
	Ncm	In.-lbs	Ncm	In.-lbs	mm	Inch	kN	lbs	g	lbs
FJN5	0.200	0.0177	0.400	0.0354	0.002 to 0.009	0.0001 to 0.0004	7.0	1574	4	0.009
FJN6	0.250	0.0221	0.400	0.0354	0.002 to 0.009	0.0001 to 0.0004	10.0	2248	9	0.020
FJN8	0.300	0.0266	0.500	0.0443	0.003 to 0.011	0.0001 to 0.0004	12.0	2698	13	0.029
FJN10	0.400	0.0354	0.600	0.0531	0.003 to 0.011	0.0001 to 0.0004	17.2	3867	23	0.051
FJN12	0.500	0.0443	0.700	0.0620	0.003 to 0.011	0.0001 to 0.0004	20.2	4541	26	0.057
FJN15	0.600	0.0531	0.800	0.0708	0.003 to 0.011	0.0001 to 0.0004	23.5	5283	35	0.077
FJN17	0.800	0.0708	1.100	0.0974	0.003 to 0.011	0.0001 to 0.0004	26.9	6047	45	0.099
FJN20	1.100	0.0974	1.400	0.1239	0.005 to 0.013	0.0002 to 0.0005	41.5	9329	75	0.165
FJN25	1.300	0.1151	1.700	0.1505	0.005 to 0.013	0.0002 to 0.0005	49.0	11015	88	0.194
FJN30	1.900	0.1682	2.400	0.2124	0.005 to 0.013	0.0002 to 0.0005	62.9	14140	133	0.293

Designation

FJN
Number of Standard

15
Diameter Code

A
Grease Type
A: NATO G 354 / MIL-PRF-23827
B: NATO G 395 / MIL-PRF-81322

E
Protection
E: Sealed
No Code: Shielded

1.3544.9
Material

Bearing Materials:

No Code
EN2031 / 1.3505.9 / AISI E52100

1.3544.9
EN2030 / 1.3544.9 / AISI 440C

Technical Specification
EN2063

Part Number Example
FJN 15 A E 1.3544.9

** Inch dimensions are for reference only. | * Permanently marked in non-functional area.*

Contact

USA: KAMATICS CORPORATION 1330 Blue Hills Avenue Bloomfield, CT 06002 USA | **Tel:** +1 860 243 9704 | **E-mail:** KSB@kaman.com
GERMANY: RWG GERMANY GmbH Medbacher Weg 1 D-91315 Höchstadt a. d. Aisch | **Tel:** +49 (91 93) 50105 100 | **E-mail:** RWG@kaman.com

Rolling-Element Bearings

FT

- Single Row
- Full Complement

Specifications

Diameter Code	d		Δ dmp		D		Δ Dmp		B		Δ Bmp	
	mm	Inch	mm	Inch	mm	Inch	mm	Inch	mm	Inch	mm	Inch
FT10	10.000	0.3937	-0.008	-0.0003	22.000	0.8661	-0.009	-0.0004	6.000	0.2362	-0.120	-0.0047
FT12	12.000	0.4724	-0.008	-0.0003	24.000	0.9449	-0.009	-0.0004	6.000	0.2362	-0.120	-0.0047
FT15	15.000	0.5906	-0.008	-0.0003	28.000	1.1024	-0.009	-0.0004	6.000	0.2362	-0.120	-0.0047
FT16	16.000	0.6299	-0.008	-0.0003	30.000	1.1811	-0.009	-0.0004	6.000	0.2362	-0.120	-0.0047
FT20	20.000	0.7874	-0.010	-0.0004	35.000	1.3780	-0.011	-0.0004	7.000	0.2756	-0.120	-0.0047
FT25	25.000	0.9843	-0.010	-0.0004	40.000	1.5748	-0.011	-0.0004	7.000	0.2756	-0.120	-0.0047
FT28	28.000	1.1024	-0.010	-0.0004	43.000	1.6929	-0.011	-0.0004	7.000	0.2756	-0.120	-0.0047
FT32	32.000	1.2598	-0.012	-0.0005	48.000	1.8898	-0.011	-0.0004	7.000	0.2756	-0.120	-0.0047
FT35	35.000	1.3780	-0.012	-0.0005	51.000	2.0079	-0.013	-0.0005	7.000	0.2756	-0.120	-0.0047
FT40	40.000	1.5748	-0.012	-0.0005	57.000	2.2441	-0.013	-0.0005	8.000	0.3150	-0.120	-0.0047
FT45	45.000	1.7717	-0.012	-0.0005	62.000	2.4409	-0.013	-0.0005	8.000	0.3150	-0.120	-0.0047
FT50	50.000	1.9685	-0.012	-0.0005	68.000	2.6772	-0.013	-0.0005	8.000	0.3150	-0.120	-0.0047
FT55	55.000	2.1654	-0.015	-0.0006	73.000	2.8740	-0.013	-0.0005	8.000	0.3150	-0.120	-0.0047
FT63	63.000	2.4803	-0.015	-0.0006	82.000	3.2283	-0.013	-0.0005	9.000	0.3543	-0.120	-0.0047
FT80	80.000	3.1496	-0.015	-0.0006	100.000	3.9370	-0.015	-0.0006	9.000	0.3543	-0.120	-0.0047
FT90	90.000	3.5433	-0.020	-0.0008	115.000	4.5276	-0.015	-0.0006	9.000	0.3543	-0.120	-0.0047

Diameter Code	d_1 (min.)		r		Δ rmp		Starting Torque No Code / (max.)	
	mm	Inch	mm	Inch	mm	Inch	Ncm	In.-lbs
FT10	14.500	0.5709	0.500	0.0197	-0.20 to +0.30	-0.0079 to +0.0118	0.300	0.0266
FT12	16.500	0.6496	0.500	0.0197	-0.20 to +0.30	-0.0079 to +0.0118	0.350	0.0310
FT15	17.650	0.6949	0.500	0.0197	-0.20 to +0.30	-0.0079 to +0.0118	0.400	0.0354
FT16	18.600	0.7323	0.500	0.0197	-0.20 to +0.30	-0.0079 to +0.0118	0.500	0.0443
FT20	24.500	0.9646	0.500	0.0197	-0.20 to +0.30	-0.0079 to +0.0118	0.600	0.0531
FT25	29.500	1.1614	0.500	0.0197	-0.20 to +0.30	-0.0079 to +0.0118	0.800	0.0708
FT28	33.500	1.3189	0.500	0.0197	-0.20 to +0.30	-0.0079 to +0.0118	1.100	0.0974
FT32	36.800	1.4488	0.500	0.0197	-0.20 to +0.30	-0.0079 to +0.0118	1.400	0.1239
FT35	40.950	1.6122	0.500	0.0197	-0.20 to +0.30	-0.0079 to +0.0118	1.800	0.1593
FT40	45.800	1.8031	0.500	0.0197	-0.20 to +0.30	-0.0079 to +0.0118	2.200	0.1947
FT45	50.800	2.0000	0.500	0.0197	-0.20 to +0.30	-0.0079 to +0.0118	2.600	0.2301
FT50	53.300	2.0984	0.500	0.0197	-0.20 to +0.30	-0.0079 to +0.0118	3.200	0.2832
FT55	61.200	2.4094	0.500	0.0197	-0.20 to +0.30	-0.0079 to +0.0118	3.900	0.3452
FT63	69.700	2.7441	0.500	0.0197	-0.20 to +0.30	-0.0079 to +0.0118	5.500	0.4868
FT80	87.000	3.4252	0.500	0.0197	-0.20 to +0.30	-0.0079 to +0.0118	7.500	0.6638
FT90	96.900	3.8150	0.500	0.0197	-0.20 to +0.30	-0.0079 to +0.0118	11.000	0.9735

Schematic Drawing

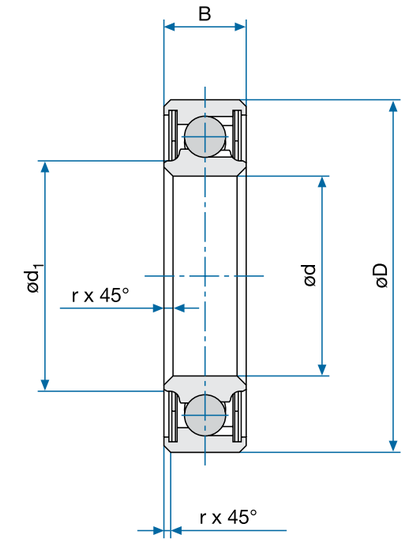

Specifications

FT

Diameter Code	Starting Torque Code E / (max.)		Radial Play		Static Radial Limit Load		Weight	
	Ncm	In.-lbs	mm	Inch	kN	lbs	g	lbs
FT10	0.500	0.0443	0.003 to 0.011	0.0001 to 0.0004	10.6	2383	11	0.024
FT12	0.600	0.0531	0.003 to 0.011	0.0001 to 0.0004	12.3	2765	13	0.029
FT15	0.700	0.0620	0.003 to 0.011	0.0001 to 0.0004	14.5	3260	15	0.033
FT16	0.800	0.0708	0.003 to 0.011	0.0001 to 0.0004	15.2	3417	17	0.037
FT20	0.900	0.0797	0.005 to 0.013	0.0002 to 0.0005	18.6	4181	25	0.055
FT25	1.400	0.1239	0.005 to 0.013	0.0002 to 0.0005	22.2	4991	29	0.064
FT28	1.600	0.1416	0.005 to 0.013	0.0002 to 0.0005	24.2	5440	32	0.070
FT32	2.000	0.1770	0.005 to 0.013	0.0002 to 0.0005	27.0	6070	39	0.086
FT35	2.300	0.2036	0.005 to 0.013	0.0002 to 0.0005	29.0	6519	42	0.092
FT40	2.900	0.2567	0.005 to 0.013	0.0002 to 0.0005	33.2	7463	56	0.123
FT45	3.500	0.3098	0.005 to 0.013	0.0002 to 0.0005	36.7	8250	60	0.132
FT50	4.500	0.3983	0.005 to 0.013	0.0002 to 0.0005	40.2	9037	67	0.147
FT55	6.000	0.5310	0.005 to 0.013	0.0002 to 0.0005	43.6	9801	76	0.167
FT63	7.500	0.6638	0.005 to 0.013	0.0002 to 0.0005	61.7	13870	110	0.242
FT80	12.000	1.0620	0.005 to 0.013	0.0002 to 0.0005	75.7	17017	132	0.290
FT90	16.000	1.4160	0.005 to 0.013	0.0002 to 0.0005	86.5	19445	223	0.491

Designation

FT
Number of Standard

40
Diameter Code

A
Grease Type
A: NATO G 354 / MIL-PRF-23827
B: NATO G 395 / MIL-PRF-81322
G 350: NATO G 350 / MIL-G-3278

E
Protection
E: Sealed
No Code: Shielded (CRES)

1.3544.9
Material

Part Number Example
FT 40 A E 1.3544.9

Bearing Materials:

No Code
EN2031 / 1.3505.9 / AISI E52100

1.3544.9
EN2030 / 1.3544.9 / AISI 440C

** Inch dimensions are for reference only. | * Permanently marked in non-functional area.*

Contact

USA: KAMATICS CORPORATION 1330 Blue Hills Avenue Bloomfield, CT 06002 USA | **Tel:** +1 860 243 9704 | **E-mail:** KSB@kaman.com
GERMANY: RWG GERMANY GmbH Medbacher Weg 1 D-91315 Höchstadt a. d. Aisch | **Tel:** +49 (91 93) 50105 100 | **E-mail:** RWG@kaman.com

Rolling-Element Bearings

ABS0131 / ABS0342

- Single Row
- Full Complement
- Dimensions According to AS27640

Specifications

Diameter Code	d		Δ dmp		D		Δ Dmp		B		Δ Bmp	
	mm	Inch	mm	Inch	mm	Inch	mm	Inch	mm	Inch	mm	Inch
03A	4.826	0.1900	-0.013	-0.0005	15.875	0.6250	-0.013	-0.0005	6.223	0.2450	-0.127	-0.0050
03	4.826	0.1900	-0.013	-0.0005	19.746	0.7774	-0.013	-0.0005	7.544	0.2970	-0.127	-0.0050
04	6.350	0.2500	-0.013	-0.0005	22.896	0.9014	-0.013	-0.0005	12.294	0.4840	-0.127	-0.0050
05	7.938	0.3125	-0.013	-0.0005	31.750	1.2500	-0.013	-0.0005	14.173	0.5580	-0.127	-0.0050
06	9.525	0.3750	-0.013	-0.0005	36.513	1.4375	-0.013	-0.0005	15.748	0.6200	-0.127	-0.0050
08	12.700	0.5000	-0.013	-0.0005	42.863	1.6875	-0.013	-0.0005	15.748	0.6200	-0.127	-0.0050
10	15.875	0.6250	-0.013	-0.0005	49.213	1.9375	-0.013	-0.0005	15.748	0.6200	-0.127	-0.0050

Diameter Code	C		Δ Cmp		d_1 (min.)		r_1		Δ $r_1$mp		r_2	
	mm	Inch	mm	Inch	mm	Inch	mm	Inch	mm	Inch	mm	Inch
03A	5.156	0.2030	-0.127	-0.0050	7.112	0.2800	0.130	0.0051	+0.380	+0.0150	0.250	0.0098
03	6.858	0.2700	-0.127	-0.0050	8.407	0.3310	0.130	0.0051	+0.380	+0.0150	0.560	0.0220
04	8.509	0.3350	-0.127	-0.0050	9.906	0.3900	0.130	0.0051	+0.380	+0.0150	0.810	0.0319
05	9.525	0.3750	-0.127	-0.0050	11.913	0.4690	0.380	0.0150	+0.380	+0.0150	0.810	0.0319
06	11.913	0.4690	-0.127	-0.0050	15.011	0.5910	0.380	0.0150	+0.380	+0.0150	0.810	0.0319
08	12.700	0.5000	-0.127	-0.0050	19.507	0.7680	0.380	0.0150	+0.380	+0.0150	1.120	0.0441
10	12.700	0.5000	-0.127	-0.0050	21.590	0.8500	0.380	0.0150	+0.380	+0.0150	1.120	0.0441

Diameter Code	Δ $r_2$mp		Starting Torque ABS 0131 / (max.)		Starting Torque ABS 0342 / (max.)		Radial Play Code N		Radial Play Code R	
	mm	Inch	Ncm	In.-lbs	Ncm	In.-lbs	mm	Inch	mm	Inch
03A	+0.380	+0.0150	0.470	0.0416	0.700	0.0620	0.010 to 0.0250	0.0004 to 0.0010	0.005 to 0.013	0.0002 to 0.0005
03	+0.380	+0.0150	0.530	0.0469	0.800	0.0708	0.010 to 0.0250	0.0004 to 0.0010	0.005 to 0.013	0.0002 to 0.0005
04	+0.380	+0.0150	0.630	0.0558	0.950	0.0841	0.010 to 0.0250	0.0004 to 0.0010	0.005 to 0.013	0.0002 to 0.0005
05	+0.380	+0.0150	0.730	0.0646	1.100	0.0974	0.010 to 0.0250	0.0004 to 0.0010	0.005 to 0.013	0.0002 to 0.0005
06	+0.380	+0.0150	0.860	0.0761	1.300	0.1151	0.010 to 0.0250	0.0004 to 0.0010	0.005 to 0.013	0.0002 to 0.0005
08	+0.380	+0.0150	1.100	0.0974	1.600	0.1416	0.010 to 0.0250	0.0004 to 0.0010	0.005 to 0.013	0.0002 to 0.0005
10	+0.380	+0.0150	1.330	0.1177	2.000	0.1770	0.010 to 0.0250	0.0004 to 0.0010	0.005 to 0.013	0.0002 to 0.0005

Schematic Drawing

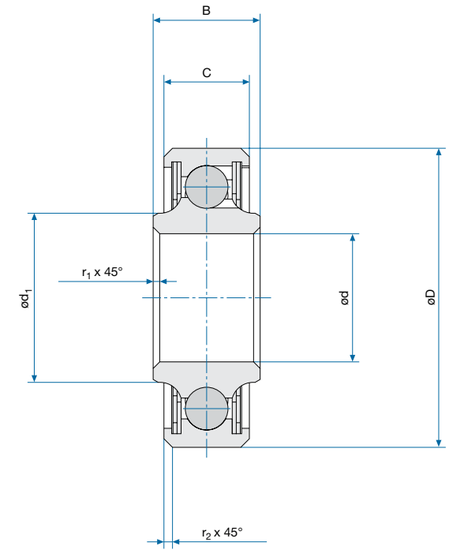

Specifications

ABS0131 / ABS0342

Diameter Code	Axial Play Code N / (max.)		Axial Play Code R / (max.)		Static Radial Limit Load		Static Axial Limit Load		Weight	
	mm	Inch	mm	Inch	kN	lbs	kN	lbs	g	lbs
03A	0.180	0.0071	0.100	0.0039	6.94	1560	3.11	700	5	0.011
03	0.180	0.0071	0.100	0.0039	8.36	1880	4.00	900	14	0.031
04	0.180	0.0071	0.100	0.0039	11.92	2680	5.34	1200	18	0.040
05	0.180	0.0071	0.100	0.0039	25.00	5620	11.12	2500	41	0.090
06	0.230	0.0091	0.160	0.0063	35.19	7910	15.57	3500	68	0.150
08	0.230	0.0091	0.160	0.0063	52.49	11800	23.13	5200	95	0.209
10	0.230	0.0091	0.160	0.0063	62.72	14100	27.58	6200	127	0.279

Designation

ABS0131
Number of Standard

03
Diameter Code

N
Radial / Axial Play
N: Normal
R: Reduced

Shields
CRES

Part Number Example
ABS0131 03 N

ABS0342
Number of Standard

N
Radial / Axial Play
N: Normal
R: Reduced

03
Diameter Code

Sealed Type
Seals (PTFE); Seal Retainers (CRES)

Part Number Example
ABS0342 N 03

Bearing Materials:

Materials
EN2030 / 1.3544.9 / AISI 440C
Cadmium Plated Except Bore

Lubrication
NATO G 395 / MIL-PRF-81322

Technical Specification
SAE AS7949 / DAN446

** Inch dimensions are for reference only. | * Permanently marked in non-functional area.*

Contact

USA: KAMATICS CORPORATION 1330 Blue Hills Avenue Bloomfield, CT 06002 USA | **Tel:** +1 860 243 9704 | **E-mail:** KSB@kaman.com
GERMANY: RWG GERMANY GmbH Medbacher Weg 1 D-91315 Höchstadt a. d. Aisch | **Tel:** +49 (91 93) 50105 100 | **E-mail:** RWG@kaman.com

Rolling-Element Bearings

ABS0132 / ABS0343

- Single Row
- Full Complement
- Dimensions According to AS27641

Specifications

Diameter Code	d		Δ dmp		D		Δ Dmp		B		Δ Bmp	
	mm	Inch	mm	Inch	mm	Inch	mm	Inch	mm	Inch	mm	Inch
03	4.826	0.1900	-0.013	-0.0005	15.875	0.6250	-0.013	-0.0005	7.543	0.2970	-0.127	-0.0050
04	6.350	0.2500	-0.013	-0.0005	19.050	0.7500	-0.013	-0.0005	7.137	0.2810	-0.127	-0.0050
05	7.937	0.3125	-0.013	-0.0005	20.637	0.8125	-0.013	-0.0005	7.543	0.2970	-0.127	-0.0050
06	9.525	0.3750	-0.013	-0.0005	22.225	0.8750	-0.013	-0.0005	7.950	0.3130	-0.127	-0.0050
08	12.700	0.5000	-0.013	-0.0005	28.575	1.1250	-0.013	-0.0005	9.525	0.3750	-0.127	-0.0050
10	15.875	0.6250	-0.013	-0.0005	34.925	1.3750	-0.013	-0.0005	10.312	0.4060	-0.127	-0.0050
12	19.050	0.7500	-0.013	-0.0005	41.275	1.6250	-0.013	-0.0005	11.100	0.4370	-0.127	-0.0050
16	25.400	1.0000	-0.013	-0.0005	50.800	2.0000	-0.013	-0.0005	12.700	0.5000	-0.127	-0.0050
20	31.750	1.2500	-0.013	-0.0005	57.150	2.2500	-0.013	-0.0005	12.700	0.5000	-0.127	-0.0050

Diameter Code	C		Δ Cmp		d_1 (min.)		r_1		Δ $r_1$mp		r_2	
	mm	Inch	mm	Inch	mm	Inch	mm	Inch	mm	Inch	mm	Inch
03	5.943	0.2340	-0.127	-0.0050	7.540	0.2969	0.127	0.0050	+0.380	+0.0150	0.406	0.0160
04	5.562	0.2190	-0.127	-0.0050	9.650	0.3799	0.127	0.0050	+0.380	+0.0150	0.406	0.0160
05	5.943	0.2340	-0.127	-0.0050	10.540	0.4150	0.380	0.0150	+0.380	+0.0150	0.406	0.0160
06	6.350	0.2500	-0.127	-0.0050	12.570	0.4949	0.380	0.0150	+0.380	+0.0150	0.406	0.0160
08	7.950	0.3130	-0.127	-0.0050	15.650	0.6161	0.380	0.0150	+0.380	+0.0150	0.406	0.0160
10	8.737	0.3440	-0.127	-0.0050	19.510	0.7681	0.380	0.0150	+0.380	+0.0150	0.813	0.0320
12	9.525	0.3750	-0.127	-0.0050	23.340	0.9189	0.380	0.0150	+0.380	+0.0150	0.813	0.0320
16	11.125	0.4380	-0.127	-0.0050	31.520	1.2409	0.380	0.0150	+0.380	+0.0150	0.813	0.0320
20	11.125	0.4380	-0.127	-0.0050	37.540	1.4780	0.380	0.0150	+0.380	+0.0150	0.813	0.0320

Diameter Code	Δ $r_2$mp		Starting Torque ABS0132 / (max.)		Starting Torque ABS0343 / (max.)		Radial Play Code N		Radial Play Code R	
	mm	Inch	Ncm	In.-lbs	Ncm	In.-lbs	mm	Inch	mm	Inch
03	+0.380	+0.0150	0.470	0.0416	0.700	0.0620	0.010 to 0.025	0.0004 to 0.0010	0.005 to 0.013	0.0002 to 0.0005
04	+0.380	+0.0150	0.530	0.0469	0.800	0.0708	0.010 to 0.025	0.0004 to 0.0010	0.005 to 0.013	0.0002 to 0.0005
05	+0.380	+0.0150	0.630	0.0558	0.950	0.0841	0.010 to 0.025	0.0004 to 0.0010	0.005 to 0.013	0.0002 to 0.0005
06	+0.380	+0.0150	0.700	0.0620	1.050	0.0929	0.010 to 0.025	0.0004 to 0.0010	0.005 to 0.013	0.0002 to 0.0005
08	+0.380	+0.0150	0.760	0.0673	1.150	0.1018	0.010 to 0.025	0.0004 to 0.0010	0.005 to 0.013	0.0002 to 0.0005
10	+0.380	+0.0150	0.930	0.0823	1.400	0.1239	0.010 to 0.025	0.0004 to 0.0010	0.005 to 0.013	0.0002 to 0.0005
12	+0.380	+0.0150	1.200	0.1062	1.800	0.1593	0.010 to 0.025	0.0004 to 0.0010	0.005 to 0.013	0.0002 to 0.0005
16	+0.380	+0.0150	1.870	0.1655	2.800	0.2478	0.010 to 0.025	0.0004 to 0.0010	0.005 to 0.013	0.0002 to 0.0005
20	+0.380	+0.0150	2.600	0.2301	3.900	0.3452	0.010 to 0.025	0.0004 to 0.0010	0.005 to 0.013	0.0002 to 0.0005

Schematic Drawing

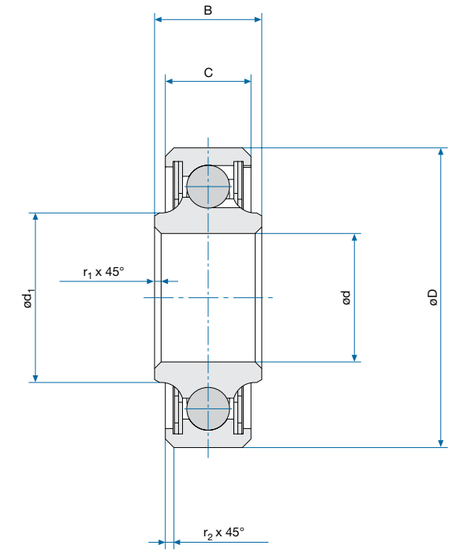

Specifications

ABS0132 / ABS0343

Diameter Code	Axial Play Code N / (max.)		Axial Play Code R / (max.)		Static Radial Limit Load		Static Axial Limit Load		Weight	
	mm	Inch	mm	Inch	kN	lbs	kN	lbs	g	lbs
03	0.127	0.0050	0.102	0.0040	6.9	1560	3.1	700	5	0.011
04	0.127	0.0050	0.102	0.0040	8.4	1880	4.0	900	9	0.020
05	0.127	0.0050	0.102	0.0040	9.7	2190	4.5	1000	9	0.020
06	0.127	0.0050	0.102	0.0040	11.1	2500	4.9	1100	14	0.031
08	0.179	0.0070	0.127	0.0050	17.4	3910	7.6	1700	23	0.051
10	0.179	0.0070	0.127	0.0050	29.8	6700	13.3	3000	36	0.079
12	0.179	0.0070	0.127	0.0050	39.1	8790	17.4	3900	59	0.130
16	0.179	0.0070	0.127	0.0050	52.9	11900	23.1	5200	100	0.220
20	0.179	0.0070	0.127	0.0050	61.4	13800	27.1	6100	118	0.260

Designation

ABS0132
Number of Standard

03
Diameter Code

N
Radial / Axial Play
N: Normal
R: Reduced

Shields
CRES

Part Number Example
ABS0132 03 N

ABS0343
Number of Standard

N
Radial / Axial Play
N: Normal
R: Reduced

03
Diameter Code

Sealed Type
Seals (PTFE); Seal Retainers (CRES)

Part Number Example
ABS0343 N 03

Bearing Materials:

Materials
EN2030 / 1.3544.9 / AISI 440C
Cadmium Plated Except Bore

Lubrication
NATO G 395 / MIL-G-81322

Technical Specification
SAE AS7949 / DAN446

** Inch dimensions are for reference only. | * Permanently marked in non-functional area.*

Contact

USA: KAMATICS CORPORATION 1330 Blue Hills Avenue Bloomfield, CT 06002 USA | **Tel:** +1 860 243 9704 | **E-mail:** KSB@kaman.com
GERMANY: RWG GERMANY GmbH Medbacher Weg 1 D-91315 Höchstadt a. d. Aisch | **Tel:** +49 (91 93) 50105 100 | **E-mail:** RWG@kaman.com

Rolling-Element Bearings

ABS0133 / ABS0344

- Single Row
- Full Complement
- Dimensions According to AS27642

Specifications

Diameter Code	d		Δ dmp		D		Δ Dmp		B		Δ Bmp	
	mm	Inch	mm	Inch	mm	Inch	mm	Inch	mm	Inch	mm	Inch
16	25.400	1.0000	-0.013	-0.0005	44.450	1.7500	-0.025	-0.0010	11.100	0.4370	-0.127	-0.0050
21	33.350	1.3130	-0.025	-0.0010	52.388	2.0625	-0.025	-0.0010	11.100	0.4370	-0.127	-0.0050
23	36.525	1.4380	-0.025	-0.0010	55.563	2.1875	-0.025	-0.0010	11.100	0.4370	-0.127	-0.0050
25	39.700	1.5630	-0.025	-0.0010	58.738	2.3125	-0.025	-0.0010	11.100	0.4370	-0.127	-0.0050
29	46.050	1.8130	-0.025	-0.0010	65.088	2.5625	-0.025	-0.0010	11.100	0.4370	-0.127	-0.0050
33	52.400	2.0630	-0.025	-0.0010	71.438	2.8125	-0.025	-0.0010	11.100	0.4370	-0.127	-0.0050
37	58.750	2.3130	-0.025	-0.0010	77.788	3.0625	-0.025	-0.0010	11.100	0.4370	-0.127	-0.0050
47	74.625	2.9380	-0.025	-0.0010	98.425	3.8750	-0.025	-0.0010	13.487	0.5310	-0.127	-0.0050
49	77.800	3.0630	-0.025	-0.0010	101.600	4.0000	-0.025	-0.0010	13.487	0.5310	-0.127	-0.0050

Diameter Code	C		Δ Cmp		d_1 (min.)		r_1		Δ $r_1$mp		Starting Torque ABS0344 / (max.)	
	mm	Inch	mm	Inch	mm	Inch	mm	Inch	mm	Inch	Ncm	In.-lbs
16	9.525	0.3750	-0.127	-0.0050	28.981	1.1410	0.610	0.0240	+0.400	+0.0157	2.500	0.2213
21	9.525	0.3750	-0.127	-0.0050	36.932	1.4540	0.610	0.0240	+0.400	+0.0157	3.200	0.2832
23	9.525	0.3750	-0.127	-0.0050	40.005	1.5750	0.610	0.0240	+0.400	+0.0157	3.800	0.3363
25	9.525	0.3750	-0.127	-0.0050	43.002	1.6930	0.610	0.0240	+0.400	+0.0157	4.300	0.3806
29	9.525	0.3750	-0.127	-0.0050	49.048	1.9310	0.610	0.0240	+0.400	+0.0157	5.900	0.5222
33	9.525	0.3750	-0.127	-0.0050	56.667	2.2310	0.610	0.0240	+0.400	+0.0157	6.800	0.6018
37	9.525	0.3750	-0.127	-0.0050	62.687	2.4680	0.610	0.0240	+0.400	+0.0157	9.100	0.8054
47	11.913	0.4690	-0.127	-0.0050	78.562	3.0930	0.990	0.0390	+0.400	+0.0157	9.700	0.8585
49	11.913	0.4690	-0.127	-0.0050	81.839	3.2220	0.990	0.0390	+0.400	+0.0157	10.200	0.9027

Diameter Code	Starting Torque ABS 0133 / (max.)		Radial Play Code R		Radial Play Code N		Axial Play Code R / (max.)	
	Ncm	In.-lbs	mm	Inch	mm	Inch	mm	Inch
16	1.670	0.1478	0.003 to 0.013	0.0001 to 0.0005	0.008 to 0.025	0.0003 to 0.0010	0.127 max.	0.0050 max.
21	2.130	0.1885	0.003 to 0.013	0.0001 to 0.0005	0.008 to 0.025	0.0003 to 0.0010	0.127 max.	0.0050 max.
23	2.530	0.2239	0.003 to 0.013	0.0001 to 0.0005	0.008 to 0.025	0.0003 to 0.0010	0.127 max.	0.0050 max.
25	2.860	0.2531	0.003 to 0.013	0.0001 to 0.0005	0.008 to 0.025	0.0003 to 0.0010	0.127 max.	0.0050 max.
29	3.930	0.3478	0.003 to 0.013	0.0001 to 0.0005	0.008 to 0.025	0.0003 to 0.0010	0.127 max.	0.0050 max.
33	4.530	0.4009	0.003 to 0.013	0.0001 to 0.0005	0.008 to 0.025	0.0003 to 0.0010	0.127 max.	0.0050 max.
37	6.060	0.5363	0.003 to 0.013	0.0001 to 0.0005	0.008 to 0.025	0.0003 to 0.0010	0.127 max.	0.0050 max.
47	6.460	0.5717	0.003 to 0.013	0.0001 to 0.0005	0.008 to 0.025	0.0003 to 0.0010	0.127 max.	0.0050 max.
49	6.800	0.6018	0.003 to 0.013	0.0001 to 0.0005	0.008 to 0.025	0.0003 to 0.0010	0.127 max.	0.0050 max.

Schematic Drawing

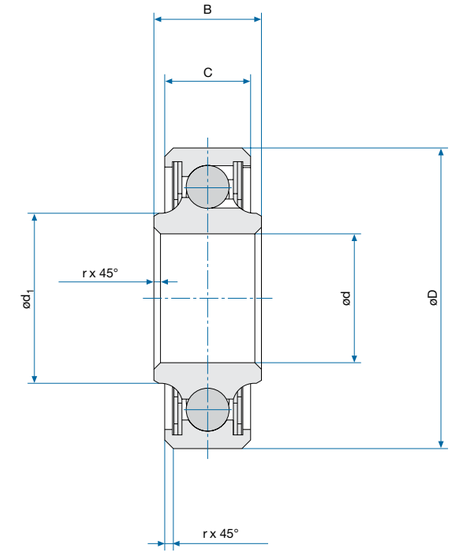

Specifications

ABS0133 / ABS0344

Diameter Code	Axial Play Code N / (max.)		Static Radial Limit Load		Static Axial Limit Load		Weight	
	mm	Inch	kN	lbs	kN	lbs	g	lbs
16	0.179 max.	0.0070 max.	36.0	8085	16.0	3600	64	0.141
21	0.179 max.	0.0070 max.	43.8	9840	19.6	4400	73	0.161
23	0.179 max.	0.0070 max.	46.7	10500	20.9	4700	77	0.169
25	0.179 max.	0.0070 max.	50.3	11300	22.2	5000	86	0.189
29	0.179 max.	0.0070 max.	56.5	12700	24.9	5600	95	0.209
33	0.179 max.	0.0070 max.	64.1	14400	28.5	6400	104	0.229
37	0.179 max.	0.0070 max.	70.3	15800	31.1	7000	118	0.260
47	0.179 max.	0.0070 max.	114.3	25700	48.5	10900	222	0.488
49	0.179 max.	0.0070 max.	122.3	27500	53.8	12100	240	0.528

Designation

ABS0133
Number of Standard

25
Diameter Code

N
Radial / Axial Play
N: Normal
R: Reduced

Shields
CRES

Part Number Example
ABS0133 25 N

ABS0344
Number of Standard

N
Radial / Axial Play
N: Normal
R: Reduced

03
Diameter Code

Sealed Type
Seals (PTFE); Seal Retainers (CRES)

Part Number Example
ABS0344 N 03

Bearing Materials:

Materials
EN2030 / 1.3544.9 / AISI 440C
Cadmium Plated Except Bore

Lubrication
NATO G 395 / MIL-G-81322

Technical Specification
SAE AS7949 / DAN446

** Inch dimensions are for reference only. | * Permanently marked in non-functional area.*

Contact

USA: KAMATICS CORPORATION 1330 Blue Hills Avenue Bloomfield, CT 06002 USA | **Tel:** +1 860 243 9704 | **E-mail:** KSB@kaman.com
GERMANY: RWG GERMANY GmbH Medbacher Weg 1 D-91315 Höchstadt a. d. Aisch | **Tel:** +49 (91 93) 50105 100 | **E-mail:** RWG@kaman.com

Rolling-Element Bearings

ABS0348 / NSA8154

- Single Row
- Full Complement
- Dimensions According to AS21428

Specifications

Diameter Code	d		Δ dmp		D		Δ Dmp		B		Δ Bmp	
	mm	Inch	mm	Inch	mm	Inch	mm	Inch	mm	Inch	mm	Inch
08	12.700	0.5000	-0.013	-0.0005	23.813	0.9375	-0.013	-0.0005	7.137	0.2810	-0.064	-0.0025
10	15.875	0.6250	-0.013	-0.0005	26.988	1.0625	-0.013	-0.0005	7.137	0.2810	-0.064	-0.0025
12	19.050	0.7500	-0.013	-0.0005	30.162	1.1875	-0.013	-0.0005	7.137	0.2810	-0.064	-0.0025
14	22.225	0.8750	-0.013	-0.0005	33.338	1.3125	-0.013	-0.0005	7.137	0.2810	-0.064	-0.0025
17	26.988	1.0625	-0.013	-0.0005	38.100	1.5000	-0.013	-0.0005	7.137	0.2810	-0.064	-0.0025
21	33.338	1.3125	-0.013	-0.0005	44.450	1.7500	-0.013	-0.0005	7.137	0.2810	-0.064	-0.0025
25	39.688	1.5625	-0.013	-0.0005	50.800	2.0000	-0.013	-0.0005	7.137	0.2810	-0.064	-0.0025
29	46.038	1.8125	-0.020	-0.0008	57.150	2.2500	-0.018	-0.0007	7.137	0.2810	-0.064	-0.0025
33	52.388	2.0625	-0.020	-0.0008	66.675	2.6250	-0.018	-0.0007	7.137	0.2810	-0.064	-0.0025
37	58.738	2.3125	-0.020	-0.0008	73.025	2.8750	-0.018	-0.0007	7.137	0.2810	-0.064	-0.0025

Designation

ABS0348
Number of Standard

R
Radial Play

10
Diameter Code

Sealed Type
Seals (PTFE); Seal Retainers (CRES)

Part Number Example
ABS0348 R 10

ABS0344
Number of Standard

10
Diameter Code

E
Sealed Type
E: Sealed
No Code: Shielded (CRES)

Part Number Example
NSA8154 10 E

Bearing Materials:

Materials
EN2030 / 1.3544.9 / AISI 440C
Cadmium Plated Except Bore

Lubrication
NATO G 395 / MIL-PRF-81322

Technical Specification
SAE AS7949 / DAN446

** Inch dimensions are for reference only. | * Permanently marked in non-functional area.*

Schematic Drawing

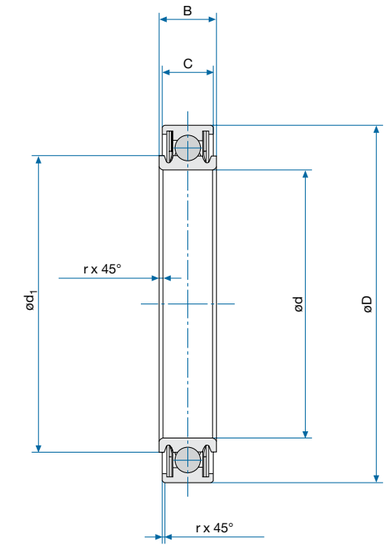

Specifications

ABS0348 / NSA8154

Diameter Code	C		Δ Cmp		r		Δ rmp		d_1 (min.)		Starting Torque (max.)	
	mm	Inch	mm	Inch	mm	Inch	mm	Inch	mm	Inch	Ncm	In.-lbs
08	6.350	0.2500	-0.127	-0.0050	0.380	0.0150	+0.508	+0.0200	16.130	0.6350	1.000	0.0885
10	6.350	0.2500	-0.127	-0.0050	0.380	0.0150	+0.508	+0.0200	19.740	0.7772	1.100	0.0974
12	6.350	0.2500	-0.127	-0.0050	0.380	0.0150	+0.508	+0.0200	22.730	0.8949	1.200	0.1062
14	6.350	0.2500	-0.127	-0.0050	0.380	0.0150	+0.508	+0.0200	25.810	1.0161	1.400	0.1239
17	6.350	0.2500	-0.127	-0.0050	0.380	0.0150	+0.508	+0.0200	30.890	1.2161	1.600	0.1416
21	6.350	0.2500	-0.127	-0.0050	0.380	0.0150	+0.508	+0.0200	36.860	1.4512	2.000	0.1770
25	6.350	0.2500	-0.127	-0.0050	0.380	0.0150	+0.508	+0.0200	43.230	1.7020	2.500	0.2213
29	6.350	0.2500	-0.127	-0.0050	0.380	0.0150	+0.508	+0.0200	50.040	1.9701	3.600	0.3186
33	6.350	0.2500	-0.127	-0.0050	0.380	0.0150	+0.508	+0.0200	58.060	2.2858	4.700	0.4160
37	6.350	0.2500	-0.127	-0.0050	0.380	0.0150	+0.508	+0.0200	64.190	2.5272	7.000	0.6195

Diameter Code	Radial Play		Axial Play (max.)		Static Radial Limit Load		Static Axial Limit Load		Weight	
	mm	Inch	mm	Inch	kN	lbs	kN	lbs	g	lbs
08	0.003 to 0.013	0.0001 to 0.0005	0.100	0.0039	12.5	2820	5.6	1260	13	0.029
10	0.003 to 0.013	0.0001 to 0.0005	0.100	0.0039	14.6	3280	6.7	1500	14	0.031
12	0.003 to 0.013	0.0001 to 0.0005	0.100	0.0039	16.7	3750	7.6	1700	18	0.040
14	0.003 to 0.013	0.0001 to 0.0005	0.100	0.0039	18.8	4220	8.5	1900	23	0.051
17	0.003 to 0.013	0.0001 to 0.0005	0.100	0.0039	22.2	5000	9.8	2200	27	0.059
21	0.003 to 0.013	0.0001 to 0.0005	0.100	0.0039	26.5	5950	12.0	2700	41	0.090
25	0.003 to 0.013	0.0001 to 0.0005	0.100	0.0039	30.6	6880	14.2	3200	45	0.099
29	0.003 to 0.013	0.0001 to 0.0005	0.100	0.0039	35.4	7960	16.0	3600	50	0.110
33	0.003 to 0.013	0.0001 to 0.0005	0.100	0.0039	41.0	9220	17.8	4000	68	0.150
37	0.003 to 0.013	0.0001 to 0.0005	0.100	0.0039	45.1	10150	19.6	4400	77	0.169

Contact

USA: KAMATICS CORPORATION 1330 Blue Hills Avenue Bloomfield, CT 06002 USA | **Tel:** +1 860 243 9704 | **E-mail:** KSB@kaman.com
GERMANY: RWG GERMANY GmbH Medbacher Weg 1 D-91315 Höchstadt a. d. Aisch | **Tel:** +49 (91 93) 50105 100 | **E-mail:** RWG@kaman.com

Rolling-Element Bearings

B500

- Single Row
- Full Complement
- Dimensions According to AS27646

Schematic Drawing

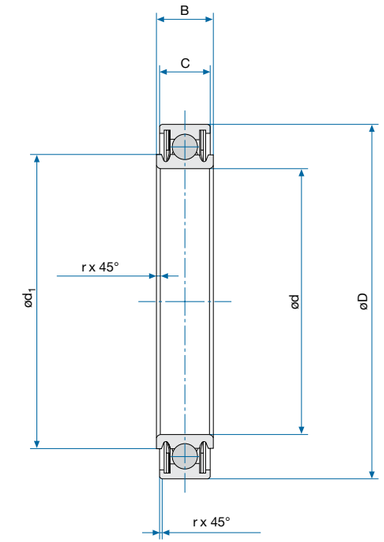

Specifications

Diameter Code	d		Δ dmp		D		Δ Dmp		B		Δ Bmp	
	mm	Inch	mm	Inch	mm	Inch	mm	Inch	mm	Inch	mm	Inch
B 538	15.875	0.6250	± 0.018	± 0.0007	26.988	1.0625	-0.025	-0.0010	7.137	0.2810	-0.127	-0.0050
B 539	19.050	0.7500	± 0.018	± 0.0007	30.162	1.1875	-0.025	-0.0010	7.137	0.2810	-0.127	-0.0050
B 540	22.225	0.8750	± 0.018	± 0.0007	33.338	1.3125	-0.025	-0.0010	7.137	0.2810	-0.127	-0.0050
B 541	26.988	1.0625	± 0.018	± 0.0007	38.100	1.5000	-0.025	-0.0010	7.137	0.2810	-0.127	-0.0050
B 542	33.338	1.3125	± 0.018	± 0.0007	44.450	1.7500	-0.025	-0.0010	7.137	0.2810	-0.127	-0.0050
B 543	39.688	1.5625	± 0.018	± 0.0007	50.800	2.0000	-0.025	-0.0010	7.137	0.2810	-0.127	-0.0050
B 544	46.038	1.8125	± 0.025	± 0.0010	57.150	2.2500	-0.038	-0.0015	7.137	0.2810	-0.127	-0.0050
B 545	52.388	2.0625	± 0.025	± 0.0010	66.675	2.6250	-0.038	-0.0015	7.137	0.2810	-0.127	-0.0050
B 546	58.738	2.3125	± 0.025	± 0.0010	73.025	2.8750	-0.038	-0.0015	7.137	0.2810	-0.127	-0.0050

Diameter Code	C		Δ Cmp		d_1 (min.)		r	
							+0.508	+0.020
	mm	Inch	mm	Inch	mm	Inch	mm	Inch
B 538	6.350	0.2500	-0.127	-0.0050	19.736	0.7770	0.380	0.0150
B 539	6.350	0.2500	-0.127	-0.0050	22.733	0.8950	0.380	0.0150
B 540	6.350	0.2500	-0.127	-0.0050	25.806	1.0160	0.380	0.0150
B 541	6.350	0.2500	-0.127	-0.0050	30.886	1.2160	0.380	0.0150
B 542	6.350	0.2500	-0.127	-0.0050	36.855	1.4510	0.380	0.0150
B 543	6.350	0.2500	-0.127	-0.0050	43.231	1.7020	0.380	0.0150
B 544	6.350	0.2500	-0.127	-0.0050	50.038	1.9700	0.380	0.0150
B 545	6.350	0.2500	-0.127	-0.0050	58.064	2.2860	0.380	0.0150
B 546	6.350	0.2500	-0.127	-0.0050	64.186	2.5270	0.380	0.0150

Specifications

B500

Diameter Code	Radial Play		Static Radial Limit Load		Weight	
	mm	Inch	kN	lbs	g	lbs
B 538	0.020 to 0.046	0.0008 to 0.0018	14.6	3280	13	0.029
B 539	0.020 to 0.046	0.0008 to 0.0018	16.7	3750	18	0.040
B 540	0.020 to 0.046	0.0008 to 0.0018	18.8	4220	22	0.048
B 541	0.020 to 0.046	0.0008 to 0.0018	22.2	5000	27	0.059
B 542	0.020 to 0.046	0.0008 to 0.0018	26.5	5950	40	0.088
B 543	0.020 to 0.046	0.0008 to 0.0018	30.6	6880	45	0.099
B 544	0.020 to 0.046	0.0008 to 0.0018	35.5	7980	49	0.108
B 545	0.020 to 0.046	0.0008 to 0.0018	41.0	9220	68	0.150
B 546	0.020 to 0.046	0.0008 to 0.0018	45.1	10150	77	0.169

Designation

B
Number of Standard

500
Diameter Code

DD
Sealed Type
DD: Sealed
P: Shielded

G
Grease Type
G: NATO G 354 / MIL-PRF-23827
No Code: NATO G 395 / MIL-PRF-81322

1.3544.9
Material

Part Number Example
B 500 DD G 1.3544.9

Bearing Materials:

No Code
EN2031 / 1.3505.9 / AISI E52100
Cadmium Plated Except Bore

1.3544.9
EN2030 / 1.3544.9 / AISI 440C
Cadmium Plated Except Bore

Technical Specification
SAE AS7949

** Inch dimensions are for reference only. | * Permanently marked in non-functional area.*

Contact

USA: KAMATICS CORPORATION 1330 Blue Hills Avenue Bloomfield, CT 06002 USA | **Tel:** +1 860 243 9704 | **E-mail:** KSB@kaman.com
GERMANY: RWG GERMANY GmbH Medbacher Weg 1 D-91315 Höchstadt a. d. Aisch | **Tel:** +49 (91 93) 50105 100 | **E-mail:** RWG@kaman.com

Rolling-Element Bearings

MB500

- Single Row
- Full Complement
- Dimensions According to AS21428

Specifications

Diameter Code	d		Δ dmp		D		Δ Dmp		B		Δ Bmp	
	mm	Inch	mm	Inch	mm	Inch	mm	Inch	mm	Inch	mm	Inch
MB 538	15.875	0.6250	-0.013	-0.0005	26.988	1.0625	-0.013	-0.0005	7.137	0.2810	-0.064	-0.0025
MB 539	19.050	0.7500	-0.013	-0.0005	30.162	1.1875	-0.013	-0.0005	7.137	0.2810	-0.064	-0.0025
MB 540	22.225	0.8750	-0.013	-0.0005	33.338	1.3125	-0.013	-0.0005	7.137	0.2810	-0.064	-0.0025
MB 541	26.988	1.0625	-0.013	-0.0005	38.100	1.5000	-0.013	-0.0005	7.137	0.2810	-0.064	-0.0025
MB 542	33.338	1.3125	-0.013	-0.0005	44.450	1.7500	-0.013	-0.0005	7.137	0.2810	-0.064	-0.0025
MB 543	39.688	1.5625	-0.013	-0.0005	50.800	2.0000	-0.013	-0.0005	7.137	0.2810	-0.064	-0.0025
MB 544	46.038	1.8125	-0.020	-0.0008	57.150	2.2500	-0.018	-0.0007	7.137	0.2810	-0.064	-0.0025
MB 545	52.388	2.0625	-0.020	-0.0008	66.675	2.6250	-0.018	-0.0007	7.137	0.2810	-0.064	-0.0025
MB 546	58.738	2.3125	-0.020	-0.0008	73.025	2.8750	-0.018	-0.0007	7.137	0.2810	-0.064	-0.0025

Diameter Code	C		Δ Cmp		r		Δ rmp		d_1 (min.)		Starting Torque Code DD / (max.)	
	mm	Inch	mm	Inch	mm	Inch	mm	Inch	mm	Inch	Ncm	In.-lbs
MB 538	6.350	0.2500	-0.127	-0.0050	0.380	0.0150	+0.508	+0.0200	19.736	0.7770	1.412	0.1250
MB 539	6.350	0.2500	-0.127	-0.0050	0.380	0.0150	+0.508	+0.0200	22.733	0.8950	1.412	0.1250
MB 540	6.350	0.2500	-0.127	-0.0050	0.380	0.0150	+0.508	+0.0200	25.806	1.0160	2.118	0.1875
MB 541	6.350	0.2500	-0.127	-0.0050	0.380	0.0150	+0.508	+0.0200	30.886	1.2160	2.825	0.2500
MB 542	6.350	0.2500	-0.127	-0.0050	0.380	0.0150	+0.508	+0.0200	36.855	1.4510	2.825	0.2500
MB 543	6.350	0.2500	-0.127	-0.0050	0.380	0.0150	+0.508	+0.0200	43.231	1.7020	3.531	0.3125
MB 544	6.350	0.2500	-0.127	-0.0050	0.380	0.0150	+0.508	+0.0200	50.038	1.9700	3.531	0.3125
MB 545	6.350	0.2500	-0.127	-0.0050	0.380	0.0150	+0.508	+0.0200	58.064	2.2860	4.237	0.3750
MB 546	6.350	0.2500	-0.127	-0.0050	0.380	0.0150	+0.508	+0.0200	64.186	2.5270	4.237	0.3750

Schematic Drawing

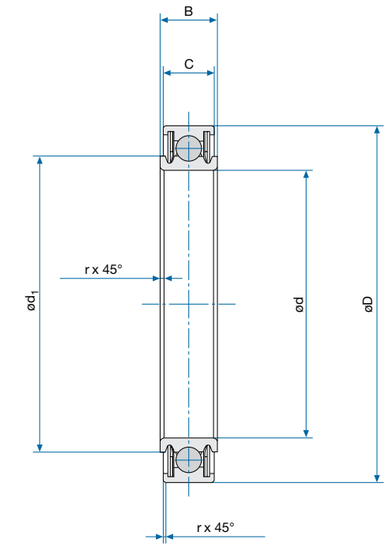

Specifications

MB500

Diameter Code	Radial Play		Axial Play		Static Radial Limit Load		Static Axial Limit Load		Weight	
	mm	Inch	mm	Inch	kN	lbs	kN	lbs	g	lbs
MB 538	0.003 to 0.013	0.0001 to 0.0005	0.100	0.0039	14.6	3280	6.7	1500	14	0.031
MB 539	0.003 to 0.013	0.0001 to 0.0005	0.100	0.0039	16.7	3750	7.6	1700	18	0.040
MB 540	0.003 to 0.013	0.0001 to 0.0005	0.100	0.0039	18.8	4220	8.5	1900	23	0.051
MB 541	0.003 to 0.013	0.0001 to 0.0005	0.100	0.0039	22.2	5000	9.8	2200	27	0.059
MB 542	0.003 to 0.013	0.0001 to 0.0005	0.100	0.0039	26.5	5950	12.0	2700	41	0.090
MB 543	0.003 to 0.013	0.0001 to 0.0005	0.100	0.0039	30.6	6880	14.2	3200	45	0.099
MB 544	0.003 to 0.013	0.0001 to 0.0005	0.100	0.0039	35.4	7960	16.0	3600	50	0.110
MB 545	0.003 to 0.013	0.0001 to 0.0005	0.100	0.0039	41.0	9220	17.8	4000	68	0.150
MB 546	0.003 to 0.013	0.0001 to 0.0005	0.100	0.0039	45.1	10150	19.6	4400	77	0.169

Designation

MB
Number of Standard

500
Diameter Code

DD
Sealed Type
DD: Sealed
P: Shielded

G
Grease Type
G: NATO G 354 / MIL-PRF-23827
No Code: NATO G 395 / MIL-PRF-81322

1.3544.9
Material

Part Number Example
MB500 DD G 1.3544.9

Bearing Materials:

No Code
EN2031 / 1.3505.9 / AISI E52100
Cadmium Plated Except Bore

1.3544.9
EN2030 / 1.3544.9 / AISI 440C
Cadmium Plated Except Bore

Technical Specification
SAE AS7949

** Inch dimensions are for reference only. | * Permanently marked in non-functional area.*

Contact

USA: KAMATICS CORPORATION 1330 Blue Hills Avenue Bloomfield, CT 06002 USA | **Tel:** +1 860 243 9704 | **E-mail:** KSB@kaman.com
GERMANY: RWG GERMANY GmbH Medbacher Weg 1 D-91315 Höchstadt a. d. Aisch | **Tel:** +49 (91 93) 50105 100 | **E-mail:** RWG@kaman.com

Rolling-Element Bearings

K / NSA8101 / NSA8111

- Single Row
- Full Complement
- Dimensions According to AS27640

Specifications

Diameter Code	d		Δ dmp		D		Δ Dmp		B		Δ Bmp	
	mm	Inch	mm	Inch	mm	Inch	mm	Inch	mm	Inch	mm	Inch
03	4.826	0.1900	-0.012	-0.0005	19.745	0.7774	-0.012	-0.0005	7.543	0.2970	-0.127	-0.0050
04	6.350	0.2500	-0.012	-0.0005	22.895	0.9014	-0.012	-0.0005	12.293	0.4840	-0.127	-0.0050
05	7.937	0.3125	-0.012	-0.0005	31.750	1.2500	-0.012	-0.0005	14.173	0.5580	-0.127	-0.0050
06	9.525	0.3750	-0.012	-0.0005	36.512	1.4375	-0.012	-0.0005	15.748	0.6200	-0.127	-0.0050
08	12.700	0.5000	-0.012	-0.0005	42.862	1.6875	-0.012	-0.0005	15.748	0.6200	-0.127	-0.0050
10	15.875	0.6250	-0.012	-0.0005	49.212	1.9375	-0.012	-0.0005	15.748	0.6200	-0.127	-0.0050

Diameter Code	C		Δ Cmp		d_1 (min.)		r_1		Δ $r_1$mp		r_2	
	mm	Inch	mm	Inch	mm	Inch	mm	Inch	mm	Inch	mm	Inch
03	6.858	0.2700	-0.127	-0.0050	8.407	0.3310	0.127	0.0050	+0.380	+0.0150	0.559	0.0220
04	8.509	0.3350	-0.127	-0.0050	9.900	0.3900	0.127	0.0050	+0.380	+0.0150	0.813	0.0320
05	9.525	0.3750	-0.127	-0.0050	11.910	0.4690	0.380	0.0150	+0.380	+0.0150	0.813	0.0320
06	11.912	0.4690	-0.127	-0.0050	15.000	0.5910	0.380	0.0150	+0.380	+0.0150	0.813	0.0320
08	12.700	0.5000	-0.127	-0.0050	19.500	0.7680	0.380	0.0150	+0.380	+0.0150	1.118	0.0440
10	12.700	0.5000	-0.127	-0.0050	21.600	0.8500	0.380	0.0150	+0.380	+0.0150	1.118	0.0440

Diameter Code	Δ $r_2$mp		Radial Play No Code		Radial Play Code R	
	mm	Inch	mm	Inch	mm	Inch
03	+0.380	+0.0150	0.010 to 0.0250	0.0004 to 0.0010	0.005 to 0.013	0.0002 to 0.0005
04	+0.380	+0.0150	0.010 to 0.0250	0.0004 to 0.0010	0.005 to 0.013	0.0002 to 0.0005
05	+0.380	+0.0150	0.010 to 0.0250	0.0004 to 0.0010	0.005 to 0.013	0.0002 to 0.0005
06	+0.380	+0.0150	0.010 to 0.0250	0.0004 to 0.0010	0.005 to 0.013	0.0002 to 0.0005
08	+0.380	+0.0150	0.010 to 0.0250	0.0004 to 0.0010	0.005 to 0.013	0.0002 to 0.0005
10	+0.380	+0.0150	0.010 to 0.0250	0.0004 to 0.0010	0.005 to 0.013	0.0002 to 0.0005

Schematic Drawing

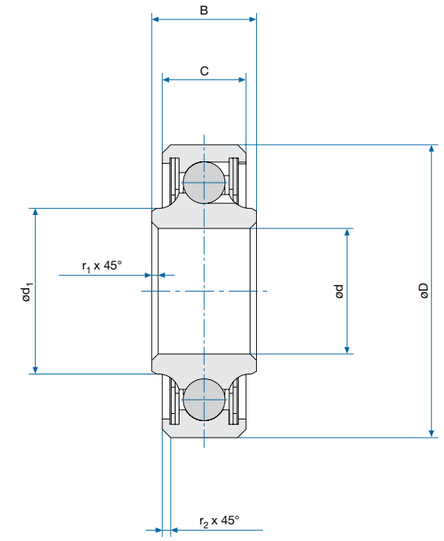

Specifications

K / NSA8101 / NSA8111

Diameter Code	Axial Play Max. for NSA only		Static Radial Limit Load		Static Axial Limit Load		Weight	
	mm	Inch	kN	lbs	kN	lbs	g	lbs
03	0.127	0.0050	7.5	1691	3.6	809	14	0.031
04	0.152	0.0060	10.7	2412	4.8	1079	18	0.040
05	0.152	0.0060	22.5	5058	10.0	2248	41	0.090
06	0.152	0.0060	31.7	7117	14.0	3147	68	0.150
08	0.178	0.0070	47.2	10620	20.8	4681	95	0.209
10	0.178	0.0070	56.5	12690	24.8	5580	127	0.279

Designation

NSA8111
Number of Standard

03
Diameter Code

Material
EN2030 / 1.3544.9 / AISI 440C Cadmium Plated Except Bore

NSA 8101
Sealed

NSA 8111
Shielded (CRES)

Lubrication
NATO G 354 / MIL-PRF-23827

Technical Specification
SAE AS7949

Part Number Example
NSA8111 03

K
Number of Standard

P
Protection
P: Sealed
No Code: Shielded (CRES)

15
Diameter Code

R
Radial Play
R: Reduced
No Code: Normal

G
Grease Type
G: NATO G 354 / MIL-PRF-23827
No Code: NATO G 395 / MIL-PRF-81322

1.3544.9
Material

No Code
EN2031 / 1.3505.9 / AISI E52100 Cadmium Plated Except Bore

1.3544.9
EN2030 / 1.3544.9 / AISI 440C Cadmium Plated Except Bore

Technical Specification
SAE AS7949

Part Number Example
K P 15 R G 1.3544.9

** Inch dimensions are for reference only. | * Permanently marked in non-functional area.*

Contact

USA: KAMATICS CORPORATION 1330 Blue Hills Avenue Bloomfield, CT 06002 USA | **Tel:** +1 860 243 9704 | **E-mail:** KSB@kaman.com
GERMANY: RWG GERMANY GmbH Medbacher Weg 1 D-91315 Höchstadt a. d. Aisch | **Tel:** +49 (91 93) 50105 100 | **E-mail:** RWG@kaman.com

Rolling-Element Bearings

K...A / NSA 8102 / NSA8112

- Single Row
- Full Complement
- Dimensions According to AS27641

Specifications

Diameter Code	d		Δ dmp		D		Δ Dmp		B		C	
									-0.127	-0.0050	-0.127	-0.0050
	mm	Inch	mm	Inch	mm	Inch	mm	Inch	mm	Inch	mm	Inch
03	4.826	0.1900	-0.012	-0.0005	15.875	0.6250	-0.012	-0.0005	7.544	0.2970	5.940	0.2339
04	6.350	0.2500	-0.012	-0.0005	19.050	0.7500	-0.012	-0.0005	7.137	0.2810	5.562	0.2190
05	7.937	0.3125	-0.012	-0.0005	20.637	0.8125	-0.012	-0.0005	7.544	0.2970	5.943	0.2340
06	9.525	0.3750	-0.012	-0.0005	22.225	0.8750	-0.012	-0.0005	7.950	0.3130	6.350	0.2500
08	12.700	0.5000	-0.012	-0.0005	28.575	1.1250	-0.012	-0.0005	9.525	0.3750	7.950	0.3130
10	15.875	0.6250	-0.012	-0.0005	34.925	1.3750	-0.012	-0.0005	10.312	0.4060	8.737	0.3440
12	19.050	0.7500	-0.012	-0.0005	41.275	1.6250	-0.012	-0.0005	11.100	0.4370	9.525	0.3750
16	25.400	1.0000	-0.012	-0.0005	50.800	2.0000	-0.012	-0.0005	12.700	0.5000	11.125	0.4380
20	31.750	1.2500	-0.012	-0.0005	57.150	2.2500	-0.012	-0.0005	12.700	0.5000	11.125	0.4380

Diameter Code	d_1 (min.)		r_1		Δ $r_1$mp		r_2		Δ $r_2$mp		Weight	
	mm	Inch	mm	Inch	mm	Inch	mm	Inch	mm	Inch	g	lbs
03	7.550	0.2972	0.127	0.0050	+0.380	+0.0150	0.406	0.0160	+0.380	+0.0150	5	0.011
04	9.650	0.3799	0.127	0.0050	+0.380	+0.0150	0.406	0.0160	+0.380	+0.0150	9	0.020
05	10.540	0.4150	0.380	0.0150	+0.380	+0.0150	0.406	0.0160	+0.380	+0.0150	9	0.020
06	12.570	0.4949	0.380	0.0150	+0.380	+0.0150	0.406	0.0160	+0.380	+0.0150	14	0.031
08	15.650	0.6161	0.380	0.0150	+0.380	+0.0150	0.406	0.0160	+0.380	+0.0150	23	0.051
10	19.507	0.7680	0.380	0.0150	+0.380	+0.0150	0.813	0.0320	+0.380	+0.0150	36	0.079
12	23.300	0.9173	0.380	0.0150	+0.380	+0.0150	0.813	0.0320	+0.380	+0.0150	59	0.130
16	31.520	1.2409	0.380	0.0150	+0.380	+0.0150	0.813	0.0320	+0.380	+0.0150	100	0.220
20	37.540	1.4780	0.380	0.0150	+0.380	+0.0150	0.813	0.0320	+0.380	+0.0150	118	0.260

Schematic Drawing

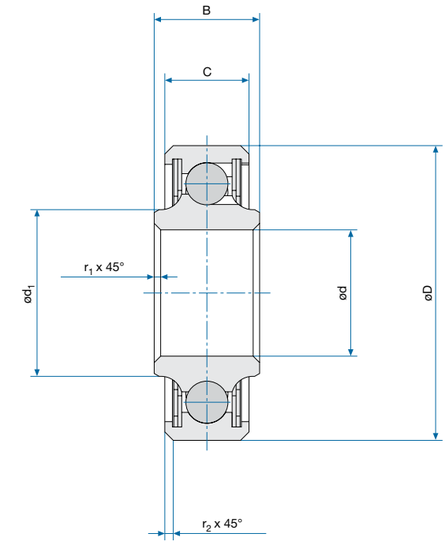

Specifications

K...A / NSA 8102 / NSA8112

Diameter Code	Radial Play No Code		Radial Play Code R		Axial Play Max. for NSA only		Static Radial Limit Load		Static Axial Limit Load	
	mm	Inch	mm	Inch	mm	Inch	kN	lbs	kN	lbs
03	0.010 to 0.0250	0.0004 to 0.0010	0.005 to 0.013	0.0002 to 0.0005	0.127	0.0050	5.3	1180	2.8	629
04	0.010 to 0.0250	0.0004 to 0.0010	0.005 to 0.013	0.0002 to 0.0005	0.152	0.0060	7.5	1693	3.6	809
05	0.010 to 0.0250	0.0004 to 0.0010	0.005 to 0.013	0.0002 to 0.0005	0.152	0.0060	8.8	1969	4.0	899
06	0.010 to 0.0250	0.0004 to 0.0010	0.005 to 0.013	0.0002 to 0.0005	0.152	0.0060	10.0	2248	4.4	989
08	0.010 to 0.0250	0.0004 to 0.0010	0.005 to 0.013	0.0002 to 0.0005	0.178	0.0070	15.7	3518	6.8	1529
10	0.010 to 0.0250	0.0004 to 0.0010	0.005 to 0.013	0.0002 to 0.0005	0.178	0.0070	26.8	6029	12.1	2720
12	0.010 to 0.0250	0.0004 to 0.0010	0.005 to 0.013	0.0002 to 0.0005	0.178	0.0070	35.2	7911	15.5	3489
16	0.010 to 0.0250	0.0004 to 0.0010	0.005 to 0.013	0.0002 to 0.0005	0.178	0.0070	47.6	10707	20.8	4680
20	0.010 to 0.0250	0.0004 to 0.0010	0.005 to 0.013	0.0002 to 0.0005	0.178	0.0070	55.2	12418	24.4	5490

Designation

NSA8112
Number of Standard

03
Diameter Code

Material
EN2030 / 1.3544.9 / AISI 440C Cadmium Plated Except Bore

NSA 8102
Seals (PTFE);
Seal Retainers (CRES)

NSA 8112
Shielded (CRES)

Lubrication
NATO G 354 / MIL-PRF-23827

Technical Specification
SAE AS7949

Part Number Example
NSA8112 03

K A
Number of Standard

P
Protection
P: Sealed
No Code: Shielded (CRES)

3
Diameter Code

R
Radial Play
R: Reduced
No Code: Normal

G
Grease Type
G: NATO G 354 / MIL-PRF-23827
No Code: NATO G 395 / MIL-PRF-81322

1.3544.9
Material

No Code
EN2031 / 1.3505.9 / AISI E52100 Cadmium Plated Except Bore

1.3544.9
EN2030 / 1.3544.9 / AISI 440C Cadmium Plated Except Bore

Technical Specification
SAE AS7949

Part Number Example
K P 3 A R G 1.3544.9

** Inch dimensions are for reference only. | * Permanently marked in non-functional area.*

Contact

USA: KAMATICS CORPORATION 1330 Blue Hills Avenue Bloomfield, CT 06002 USA | **Tel:** +1 860 243 9704 | **E-mail:** KSB@kaman.com
GERMANY: RWG GERMANY GmbH Medbacher Weg 1 D-91315 Höchstadt a. d. Aisch | **Tel:** +49 (91 93) 50105 100 | **E-mail:** RWG@kaman.com

Rolling-Element Bearings

K...B / NSA8103 / NSA8113

- Single Row
- Full Complement
- Dimensions According to AS27642

Specifications

Diameter Code	d		Δ dmp		D		Δ Dmp		B		Δ Bmp	
	mm	Inch	mm	Inch	mm	Inch	mm	Inch	mm	Inch	mm	Inch
16	25.400	1.0000	-0.025	-0.0010	44.450	1.7500	-0.025	-0.0010	11.100	0.4370	-0.127	-0.0050
21	33.350	1.3130	-0.025	-0.0010	52.388	2.0625	-0.025	-0.0010	11.100	0.4370	-0.127	-0.0050
23	36.525	1.4380	-0.025	-0.0010	55.563	2.1875	-0.025	-0.0010	11.100	0.4370	-0.127	-0.0050
25	39.700	1.5630	-0.025	-0.0010	58.738	2.3125	-0.025	-0.0010	11.100	0.4370	-0.127	-0.0050
29	46.050	1.8130	-0.025	-0.0010	65.088	2.5625	-0.025	-0.0010	11.100	0.4370	-0.127	-0.0050
33	52.400	2.0630	-0.025	-0.0010	71.438	2.8125	-0.025	-0.0010	11.100	0.4370	-0.127	-0.0050
37	58.750	2.3130	-0.025	-0.0010	77.788	3.0625	-0.025	-0.0010	11.100	0.4370	-0.127	-0.0050
47	74.625	2.9380	-0.025	-0.0010	98.425	3.8750	-0.025	-0.0010	13.487	0.5310	-0.127	-0.0050
49	77.800	3.0630	-0.025	-0.0010	101.600	4.0000	-0.025	-0.0010	13.487	0.5310	-0.127	-0.0050

Diameter Code	Radial Play Code R		Radial Play Code N		Axial Play Max. for NSA only		Static Radial Limit Load		Static Axial Limit Load	
	mm	Inch	mm	Inch	mm	Inch	kN	lbs	kN	lbs
16	0.003 to 0.013	0.0001 to 0.0005	0.008 to 0.025	0.0003 to 0.0010	0.178	0.0070	33.0	7418	6.5	1468
21	0.003 to 0.013	0.0001 to 0.0005	0.008 to 0.025	0.0003 to 0.0010	0.178	0.0070	39.4	8857	17.6	3959
23	0.003 to 0.013	0.0001 to 0.0005	0.008 to 0.025	0.0003 to 0.0010	0.178	0.0070	42.1	9455	18.8	4231
25	0.003 to 0.013	0.0001 to 0.0005	0.008 to 0.025	0.0003 to 0.0010	0.178	0.0070	45.3	10172	20.0	4500
29	0.003 to 0.013	0.0001 to 0.0005	0.008 to 0.025	0.0003 to 0.0010	0.178	0.0070	50.8	11429	22.4	5040
33	0.003 to 0.013	0.0001 to 0.0005	0.008 to 0.025	0.0003 to 0.0010	0.178	0.0070	57.7	12960	25.6	5759
37	0.003 to 0.013	0.0001 to 0.0005	0.008 to 0.025	0.0003 to 0.0010	0.178	0.0070	63.3	14219	28.0	6301
47	0.003 to 0.013	0.0001 to 0.0005	0.008 to 0.025	0.0003 to 0.0010	0.178	0.0070	98.9	22228	43.64	9810
49	0.003 to 0.013	0.0001 to 0.0005	0.008 to 0.025	0.0003 to 0.0010	0.178	0.0070	110.1	24750	48.44	10889

Schematic Drawing

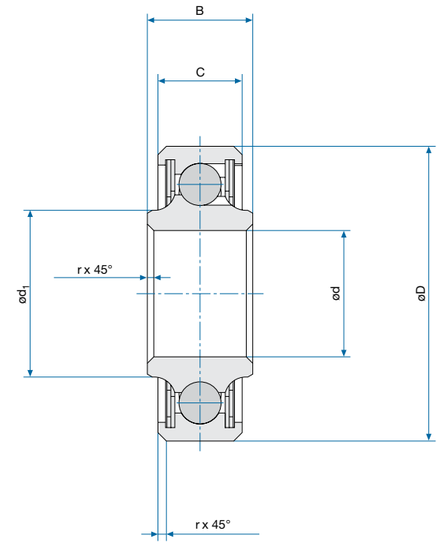

Specifications

K...B / NSA8103 / NSA8113

Diameter Code	C		Δ Cmp		d_1 (min.)		r		Δ rmp		Weight	
	mm	Inch	mm	Inch	mm	Inch	mm	Inch	mm	Inch	g	lbs
16	9.525	0.3750	-0.127	-0.0050	29.181	1.1489	0.610	0.0240	+0.400	+0.0157	64	0.141
21	9.525	0.3750	-0.127	-0.0050	36.930	1.4539	0.610	0.0240	+0.400	+0.0157	73	0.161
23	9.525	0.3750	-0.127	-0.0050	39.980	1.5740	0.610	0.0240	+0.400	+0.0157	77	0.169
25	9.525	0.3750	-0.127	-0.0050	43.000	1.6929	0.610	0.0240	+0.400	+0.0157	86	0.189
29	9.525	0.3750	-0.127	-0.0050	49.050	1.9311	0.610	0.0240	+0.400	+0.0157	95	0.209
33	9.525	0.3750	-0.127	-0.0050	56.650	2.2303	0.610	0.0240	+0.400	+0.0157	104	0.229
37	9.525	0.3750	-0.127	-0.0050	62.690	2.4681	0.610	0.0240	+0.400	+0.0157	118	0.260
47	11.912	0.4690	-0.127	-0.0050	78.562	3.0930	0.991	0.0390	+0.400	+0.0157	222	0.488
49	11.912	0.4690	-0.127	-0.0050	82.800	3.2598	0.991	0.0390	+0.400	+0.0157	240	0.528

Designation

NSA8113
Number of Standard

03
Diameter Code

Material
EN2030 / 1.3544.9 / AISI 440C Cadmium Plated Except Bore

NSA8103
Seals (PTFE);
Seal Retainers (CRES)

NSA8113
Shielded (CRES)

Lubrication
NATO G 354 / MIL-PRF-23827

Technical Specification
SAE AS7949

Part Number Example
NSA8113 03

K B
Number of Standard

P
Protection
P: Sealed
No Code: Shielded (CRES)

25
Diameter Code

R
Radial Play
R: Reduced
No Code: Normal

G
Grease Type
G: NATO G 354 / MIL-PRF-23827
No Code: NATO G 395 / MIL-PRF-81322

1.3544.9
Material

No Code
EN2031 / 1.3505.9 / AISI E52100 Cadmium Plated Except Bore

1.3544.9
EN2030 / 1.3544.9 / AISI 440C Cadmium Plated Except Bore

Technical Specification
SAE AS7949

Part Number Example
K P 25 B R G 1.3544.9

** Inch dimensions are for reference only. | * Permanently marked in non-functional area.*

Contact

USA: KAMATICS CORPORATION 1330 Blue Hills Avenue Bloomfield, CT 06002 USA | **Tel:** +1 860 243 9704 | **E-mail:** KSB@kaman.com
GERMANY: RWG GERMANY GmbH Medbacher Weg 1 D-91315 Höchstadt a. d. Aisch | **Tel:** +49 (91 93) 50105 100 | **E-mail:** RWG@kaman.com

Rolling-Element Bearings

KS

- Self-Aligning
- Single Row
- Full Complement
- Dimensions According to AS27645

Specifications

Diameter Code	d		Δ dmp		D		Δ Dmp		B		Δ Bmp	
	mm	Inch	mm	Inch	mm	Inch	mm	Inch	mm	Inch	mm	Inch
KS3L	4.826	0.1900	-0.012	-0.0005	15.875	0.6250	-0.012	-0.0005	6.223	0.2450	-0.127	-0.0050
KS3	4.826	0.1900	-0.012	-0.0005	19.746	0.7774	-0.012	-0.0005	7.544	0.2970	-0.127	-0.0050
KS4	6.350	0.2500	-0.012	-0.0005	22.895	0.9014	-0.012	-0.0005	12.293	0.4840	-0.127	-0.0050
KS4A	6.350	0.2500	-0.012	-0.0005	19.050	0.7500	-0.012	-0.0005	7.137	0.2810	-0.127	-0.0050
KS5	7.937	0.3125	-0.012	-0.0005	31.750	1.2500	-0.012	-0.0005	14.173	0.5580	-0.127	-0.0050
KS5A	7.937	0.3125	-0.012	-0.0005	20.637	0.8125	-0.012	-0.0005	7.543	0.2970	-0.127	-0.0050
KS6	9.525	0.3750	-0.012	-0.0005	36.512	1.4375	-0.012	-0.0005	15.748	0.6200	-0.127	-0.0050
KS6A	9.525	0.3750	-0.012	-0.0005	22.225	0.8750	-0.012	-0.0005	7.950	0.3130	-0.127	-0.0050
KS8	12.700	0.5000	-0.012	-0.0005	42.862	1.6875	-0.012	-0.0005	15.748	0.6200	-0.127	-0.0050
KS10	15.875	0.6250	-0.012	-0.0005	49.212	1.9375	-0.012	-0.0005	20.650	0.8130	-0.127	-0.0050

Diameter Code	C		Δ Cmp		d_1 (min.)		r_1		r_2		Weight	
							+0.380	+0.0150	+0.380	+0.0150		
	mm	Inch	mm	Inch	mm	Inch	mm	Inch	mm	Inch	g	lbs
KS3L	5.156	0.2030	-0.127	-0.0050	6.426	0.2530	0.127	0.0050	0.406	0.0160	5	0.010
KS3	6.858	0.2700	-0.127	-0.0050	7.366	0.2900	0.127	0.0050	0.559	0.0220	14	0.030
KS4	8.509	0.3350	-0.127	-0.0050	9.906	0.3900	0.127	0.0050	0.813	0.0320	18	0.040
KS4A	5.563	0.2190	-0.127	-0.0050	8.153	0.3210	0.127	0.0050	0.406	0.0160	5	0.010
KS5	9.525	0.3750	-0.127	-0.0050	14.249	0.5610	0.380	0.0150	0.813	0.0320	45	0.100
KS5A	5.943	0.2340	-0.127	-0.0050	9.677	0.3810	0.380	0.0150	0.406	0.0160	9	0.020
KS6	11.912	0.4690	-0.127	-0.0050	15.418	0.6070	0.380	0.0150	0.813	0.0320	68	0.150
KS6A	6.350	0.2500	-0.127	-0.0050	11.506	0.4530	0.406	0.0160	0.406	0.0160	14	0.030
KS8	12.700	0.5000	-0.127	-0.0050	20.091	0.7910	0.380	0.0150	1.118	0.0440	104	0.230
KS10	15.875	0.6250	-0.127	-0.0050	23.266	0.9160	0.380	0.0150	1.118	0.0440	168	0.370

Schematic Drawing

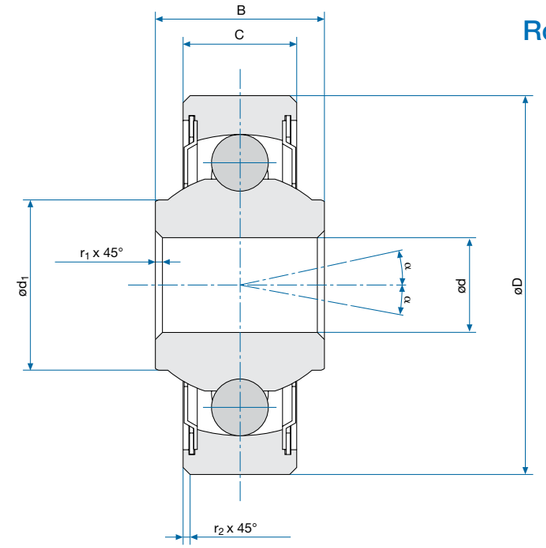

Specifications

KS

Diameter Code	Radial Play		Code R		Axial Play (max.)		Static Radial Limit Load		Static Axial Limit Load		α
	mm	Inch	mm	Inch	mm	Inch	kN	lbs	kN	lbs	
KS3L	0.000 to 0.025	0.0000 to 0.0010	0.003 to 0.013	0.0001 to 0.0005	0.584	0.0230	2.4	550	0.4	100	10°
KS3	0.000 to 0.025	0.0000 to 0.0010	0.003 to 0.013	0.0001 to 0.0005	0.584	0.0230	4.0	900	0.9	200	10°
KS4	0.000 to 0.025	0.0000 to 0.0010	0.003 to 0.013	0.0001 to 0.0005	0.635	0.0250	6.3	1410	1.3	300	10°
KS4A	0.000 to 0.025	0.0000 to 0.0010	0.003 to 0.013	0.0001 to 0.0005	0.635	0.0250	4.0	900	0.9	200	8°
KS5	0.000 to 0.025	0.0000 to 0.0010	0.003 to 0.013	0.0001 to 0.0005	0.711	0.0280	9.7	2190	1.3	300	10°
KS5A	0.000 to 0.025	0.0000 to 0.0010	0.003 to 0.013	0.0001 to 0.0005	0.635	0.0250	4.4	1000	0.9	200	8°
KS6	0.000 to 0.025	0.0000 to 0.0010	0.003 to 0.013	0.0001 to 0.0005	0.762	0.0300	13.3	2980	1.8	400	10°
KS6A	0.000 to 0.025	0.0000 to 0.0010	0.003 to 0.013	0.0001 to 0.0005	0.762	0.0300	5.0	1120	0.9	200	8°
KS8	0.000 to 0.025	0.0000 to 0.0010	0.003 to 0.013	0.0001 to 0.0005	0.813	0.0320	16.3	3670	2.2	500	10°
KS10	0.000 to 0.025	0.0000 to 0.0010	0.003 to 0.013	0.0001 to 0.0005	0.864	0.0340	23.7	5320	2.7	600	10°

Designation

KS
Number of Standard

P
Protection
P: Sealed
No Code: Shielded (CRES)

03
Diameter Code

R
Radial Play
R: Reduced
No Code: Normal

G
Grease Type
G: NATO G 354 / MIL-PRF-23827
No Code: NATO G 395 / MIL-PRF-81322

1.3544.9
Material

Part Number Example
KS P 3 R G 1.3544.99

Bearing Materials:

No Code
EN2031 / 1.3505.9 / AISI E52100
Cadmium Plated Except Bore

1.3544.9
EN2030 / 1.3544.9 / AISI 440C
Cadmium Plated Except Bore

Technical Specification
SAE AS7949

** Inch dimensions are for reference only. | * Permanently marked in non-functional area.*

Contact

USA: KAMATICS CORPORATION 1330 Blue Hills Avenue Bloomfield, CT 06002 USA | **Tel:** +1 860 243 9704 | **E-mail:** KSB@kaman.com
GERMANY: RWG GERMANY GmbH Medbacher Weg 1 D-91315 Höchstadt a. d. Aisch | **Tel:** +49 (91 93) 50105 100 | **E-mail:** RWG@kaman.com

Rolling-Element Bearings

ABS0136 / ABS0347

- Single Row
- Self-Aligning
- Full Complement
- Dimensions According to AS27648

Specifications

Diameter Code	d		Δ dmp		D		Δ Dmp		B		Δ Bmp	
	mm	Inch	mm	Inch	mm	Inch	mm	Inch	mm	Inch	mm	Inch
16	25.400	1.0000	-0.013	-0.0005	49.212	1.9375	-0.025	-0.0010	11.100	0.4370	-0.127	-0.0050
21	33.350	1.3130	-0.025	-0.0010	57.150	2.2500	-0.025	-0.0010	11.100	0.4370	-0.127	-0.0050
23	36.525	1.4380	-0.025	-0.0010	60.325	2.3750	-0.025	-0.0010	11.100	0.4370	-0.127	-0.0050
25	39.700	1.5630	-0.025	-0.0010	63.500	2.5000	-0.025	-0.0010	11.100	0.4370	-0.127	-0.0050
29	46.050	1.8130	-0.025	-0.0010	69.850	2.7500	-0.025	-0.0010	11.100	0.4370	-0.127	-0.0050
33	52.400	2.0630	-0.025	-0.0010	76.200	3.0000	-0.025	-0.0010	11.100	0.4370	-0.127	-0.0050
37	58.750	2.3130	-0.025	-0.0010	82.550	3.2500	-0.025	-0.0010	11.100	0.4370	-0.127	-0.0050
47	74.625	2.9380	-0.025	-0.0010	104.775	4.1250	-0.025	-0.0010	13.487	0.5310	-0.127	-0.0050
49	77.800	3.0630	-0.025	-0.0010	107.950	4.2500	-0.025	-0.0010	13.487	0.5310	-0.127	-0.0050

Diameter Code	C		Δ Cmp		d_1 (min.)		r		Δ rmp	
	mm	Inch	mm	Inch	mm	Inch	mm	Inch	mm	Inch
16	9.525	0.3750	-0.127	-0.0050	28.981	1.1410	0.610	0.0240	+0.380	+0.0150
21	9.525	0.3750	-0.127	-0.0050	36.932	1.4540	0.610	0.0240	+0.380	+0.0150
23	9.525	0.3750	-0.127	-0.0050	40.005	1.5750	0.610	0.0240	+0.380	+0.0150
25	9.525	0.3750	-0.127	-0.0050	43.002	1.6930	0.610	0.0240	+0.380	+0.0150
29	9.525	0.3750	-0.127	-0.0050	49.047	1.9310	0.610	0.0240	+0.380	+0.0150
33	9.525	0.3750	-0.127	-0.0050	56.667	2.2310	0.610	0.0240	+0.380	+0.0150
37	9.525	0.3750	-0.127	-0.0050	62.687	2.4680	0.610	0.0240	+0.380	+0.0150
47	11.912	0.4690	-0.127	-0.0050	78.562	3.0930	0.990	0.0390	+0.380	+0.0150
49	11.912	0.4690	-0.127	-0.0050	81.839	3.2220	0.990	0.0390	+0.380	+0.0150

Diameter Code	Swivel Torque		Starting Torque				Radial Play	
			ABS0136 / (max.)		ABS0347 / (max.)			
	Nm	In.-lbs	Ncm	In.-lbs	Ncm	In.-lbs	mm	Inch
16	0.300 to 1.500	2.655 to 13.275	1.670	0.1478	2.500	0.2213	0.008 to 0.025	0.0003 to 0.0010
21	0.300 to 1.500	2.655 to 13.275	2.130	0.1885	3.200	0.2832	0.008 to 0.025	0.0003 to 0.0010
23	0.300 to 1.500	2.655 to 13.275	2.530	0.2239	3.800	0.3363	0.008 to 0.025	0.0003 to 0.0010
25	0.300 to 1.500	2.655 to 13.275	2.860	0.2531	4.300	0.3806	0.008 to 0.025	0.0003 to 0.0010
29	0.300 to 1.500	2.655 to 13.275	3.930	0.3478	5.900	0.5222	0.008 to 0.025	0.0003 to 0.0010
33	0.500 to 2.500	4.425 to 22.125	4.530	0.4009	6.800	0.6018	0.008 to 0.025	0.0003 to 0.0010
37	0.500 to 2.500	4.425 to 22.125	6.060	0.5363	9.100	0.8054	0.008 to 0.025	0.0003 to 0.0010
47	0.500 to 2.500	4.425 to 22.125	6.460	0.5717	9.700	0.8585	0.008 to 0.025	0.0003 to 0.0010
49	0.500 to 2.500	4.425 to 22.125	6.800	0.6018	10.200	0.9027	0.008 to 0.025	0.0003 to 0.0010

Schematic Drawing

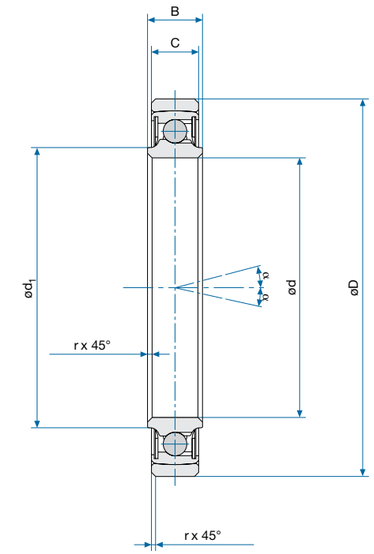

Specifications

ABS0136 / ABS0347

Diameter Code	Axial Play (max.)		Static Radial Limit Load		Static Axial Limit Load		Weight		α
	mm	Inch	kN	lbs	kN	lbs	g	lbs	
16	0.179	0.0070	36.0	8085	7.1	1600	82	0.180	7°25´
21	0.179	0.0070	43.8	9840	8.9	2000	91	0.200	6°30´
23	0.179	0.0070	46.7	10500	9.8	2200	100	0.220	6°
25	0.179	0.0070	50.3	11300	10.2	2300	113	0.249	5°45´
29	0.179	0.0070	56.5	12700	11.6	2600	123	0.271	5°
33	0.179	0.0070	64.1	14400	12.9	2900	136	0.299	5°
37	0.179	0.0070	70.3	15800	14.2	3200	150	0.330	4°30´
47	0.179	0.0070	109.9	24700	22.2	5000	290	0.638	4°30´
49	0.179	0.0070	122.3	27500	24.5	5500	313	0.689	4°

Designation

ABS0136
Number of Standard

25
Diameter Code

N
Radial / Axial Play
N: Normal

Shields
CRES

Part Number Example
ABS0136 25 N

ABS0347
Number of Standard

N
Radial / Axial Play
N: Normal

25
Diameter Code

Sealed Type
Seals (PTFE); Seal Retainers (CRES)

Part Number Example
ABS0347 N 25

Bearing Materials:

Materials
EN2030 / 1.3544.9 / AISI 440C
Cadmium Plated Except Bore

Lubrication
NATO G 395 / MIL-PRF-81322

Technical Specification
SAE AS7949 / DAN446

** Inch dimensions are for reference only. | * Permanently marked in non-functional area.*

Contact

USA: KAMATICS CORPORATION 1330 Blue Hills Avenue Bloomfield, CT 06002 USA | **Tel:** +1 860 243 9704 | **E-mail:** KSB@kaman.com
GERMANY: RWG GERMANY GmbH Medbacher Weg 1 D-91315 Höchstadt a. d. Aisch | **Tel:** +49 (91 93) 50105 100 | **E-mail:** RWG@kaman.com

Rolling-Element Bearings

K...BS / NSA8106 / NSA8116

- Single Row
- Self-Aligning
- Full Complement
- Dimensions According to AS27648

Specifications

Diameter Code	d		Δ dmp		D		Δ Dmp		B		Δ Bmp	
	mm	Inch	mm	Inch	mm	Inch	mm	Inch	mm	Inch	mm	Inch
16	25.400	1.0000	-0.013	-0.0005	49.212	1.9375	-0.025	-0.0010	11.100	0.4370	-0.120	-0.0047
21	33.350	1.3130	-0.025	-0.0010	57.150	2.2500	-0.025	-0.0010	11.100	0.4370	-0.120	-0.0047
23	36.525	1.4380	-0.025	-0.0010	60.325	2.3750	-0.025	-0.0010	11.100	0.4370	-0.120	-0.0047
25	39.700	1.5630	-0.025	-0.0010	63.500	2.5000	-0.025	-0.0010	11.100	0.4370	-0.120	-0.0047
29	46.050	1.8130	-0.025	-0.0010	69.850	2.7500	-0.025	-0.0010	11.100	0.4370	-0.120	-0.0047
33	52.400	2.0630	-0.025	-0.0010	76.200	3.0000	-0.025	-0.0010	11.100	0.4370	-0.120	-0.0047
37	58.750	2.3130	-0.025	-0.0010	82.550	3.2500	-0.025	-0.0010	11.100	0.4370	-0.120	-0.0047
47	74.625	2.9380	-0.025	-0.0010	104.775	4.1250	-0.025	-0.0010	13.487	0.5310	-0.120	-0.0047
48	76.200	3.0000	-0.025	-0.0010	107.950	4.2500	-0.025	-0.0010	13.487	0.5310	-0.120	-0.0047
49	77.800	3.0630	-0.025	-0.0010	107.950	4.2500	-0.025	-0.0010	13.487	0.5310	-0.120	-0.0047

Diameter Code	C		Δ Cmp		d_1 (min.)		r		Δ rmp		α
	mm	Inch	mm	Inch	mm	Inch	mm	Inch	mm	Inch	
16	9.525	0.3750	-0.120	-0.0047	28.981	1.1410	0.610	0.0240	+0.380	+0.0150	7°25´
21	9.525	0.3750	-0.120	-0.0047	36.931	1.4540	0.610	0.0240	+0.380	+0.0150	6°30´
23	9.525	0.3750	-0.120	-0.0047	40.005	1.5750	0.610	0.0240	+0.380	+0.0150	6°
25	9.525	0.3750	-0.120	-0.0047	43.002	1.6930	0.610	0.0240	+0.380	+0.0150	5°45´
29	9.525	0.3750	-0.120	-0.0047	95.047	3.7420	0.610	0.0240	+0.380	+0.0150	5°
33	9.525	0.3750	-0.120	-0.0047	56.667	2.2310	0.610	0.0240	+0.380	+0.0150	5°
37	9.525	0.3750	-0.120	-0.0047	62.687	2.4680	0.610	0.0240	+0.380	+0.0150	4°30´
47	11.912	0.4690	-0.120	-0.0047	78.562	3.0930	0.991	0.0390	+0.380	+0.0150	4°30´
48	11.912	0.4690	-0.120	-0.0047	81.839	3.2220	0.991	0.0390	+0.380	+0.0150	4°
49	11.912	0.4690	-0.120	-0.0047	81.839	3.2220	0.991	0.0390	+0.380	+0.0150	4°

Schematic Drawing

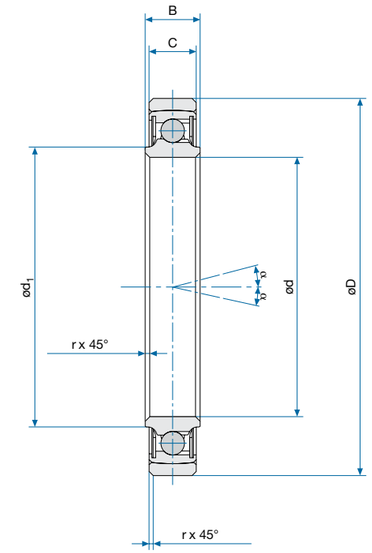

Specifications

K...BS / NSA8106 / NSA8116

Diameter Code	Radial Play		Static Radial Limit Load		Static Axial Limit Load		Weight	
	mm	Inch	kN	lbs	kN	lbs	g	lbs
16	0.008 to 0.025	0.0003 to 0.0010	32.4	7275	6.4	1440	82	0.180
21	0.008 to 0.025	0.0003 to 0.0010	39.4	8860	8.0	1800	91	0.200
23	0.008 to 0.025	0.0003 to 0.0010	42.0	9450	8.8	1980	100	0.220
25	0.008 to 0.025	0.0003 to 0.0010	45.2	10170	9.2	2070	113	0.249
29	0.008 to 0.025	0.0003 to 0.0010	50.8	11430	10.4	2340	123	0.271
33	0.008 to 0.025	0.0003 to 0.0010	57.7	12960	11.6	2610	136	0.299
37	0.008 to 0.025	0.0003 to 0.0010	63.3	14220	12.8	2880	150	0.330
47	0.008 to 0.025	0.0003 to 0.0010	98.9	22230	20.0	4500	290	0.638
48	0.008 to 0.025	0.0003 to 0.0010	110.1	24750	22.0	4950	313	0.689
49	0.008 to 0.025	0.0003 to 0.0010	110.1	24750	22.0	4950	313	0.689

Designation

NSA8116
Number of Standard

25
Diameter Code

Material
EN2030 / 1.3544.9 / AISI 440C Cadmium Plated Except Bore

NSA 8106
Seals (PTFE);
Seal Retainers (CRES)

NSA 8116
Shielded (CRES)

Lubrication
NATO G 354 / MIL-PRF-23827

Technical Specification
SAE AS7949

Part Number Example
NSA8116 25

K BS
Number of Standard

P
Protection
P: Sealed
No Code: Shielded (CRES)

25
Diameter Code

G
Grease Type
G: NATO G 354 / MIL-PRF-23827
No Code: NATO G 395 / MIL-PRF-81322

1.3544.9
Material

Lubrication
NATO G 395 / MIL-PRF-81322

No Code
EN2031 / 1.3505.9 / AISI E52100 Cadmium Plated Except Bore

1.3544.9
EN2030 / 1.3544.9 / AISI 440C Cadmium Plated Except Bore

Technical Specification
SAE AS7949

Part Number Example
K P 25 BS G 1.3544.9

** Inch dimensions are for reference only. | * Permanently marked in non-functional area.*

Contact

USA: KAMATICS CORPORATION 1330 Blue Hills Avenue Bloomfield, CT 06002 USA | **Tel:** +1 860 243 9704 | **E-mail:** KSB@kaman.com
GERMANY: RWG GERMANY GmbH Medbacher Weg 1 D-91315 Höchstadt a. d. Aisch | **Tel:** +49 (91 93) 50105 100 | **E-mail:** RWG@kaman.com

Rolling-Element Bearings

EN3059 / EN3060 / EN3061

- Single Row
- Flanged Type
- Self-Aligning
- Full Complement

Specifications

Diameter Code	d		Δ dmp		D		B		C		d_1	
					±0.200	±0.0079	±0.150	±0.0059	-0.100	-0.0039	±0.050	±0.0020
	mm	Inch	mm	Inch	mm	Inch	mm	Inch	mm	Inch	mm	Inch
16	16.000	0.6299	-0.008	-0.0003	58.000	2.2835	8.000	0.3150	6.000	0.2362	33.000	1.2992
20	20.000	0.7874	-0.010	-0.0004	63.000	2.4803	9.000	0.3543	7.000	0.2756	38.000	1.4961
25	25.000	0.9843	-0.010	-0.0004	68.000	2.6772	9.000	0.3543	7.000	0.2756	43.000	1.6929
32	32.000	1.2598	-0.012	-0.0005	77.000	3.0315	9.000	0.3543	7.000	0.2756	52.000	2.0472
35	35.000	1.3780	-0.012	-0.0005	80.000	3.1496	9.000	0.3543	7.000	0.2756	55.000	2.1654
40	40.000	1.5748	-0.012	-0.0005	86.000	3.3858	10.000	0.3937	8.000	0.3150	61.000	2.4016
45	45.000	1.7717	-0.012	-0.0005	91.000	3.5827	10.000	0.3937	8.000	0.3150	66.000	2.5984
50	50.000	1.9685	-0.012	-0.0005	97.000	3.8189	10.000	0.3937	8.000	0.3150	72.000	2.8346
63	63.000	2.4803	-0.015	-0.0006	111.000	4.3701	11.000	0.4331	9.000	0.3543	86.000	3.3858

Designation

EN3061
Number of Standard

A
Grease Type
A: NATO G 354 / MIL-PRF-23827
B: NATO G 395 / MIL-PRF-81322

16
Diameter Code

E
Protection
E: Sealed
P: Shielded

D
Flange Type (See Schematic Drawing)

T
Surface Treatment
T: Passivated
No Code: None

Part Number Example
EN3061 A 16 E D T

Bearing Materials:

EN3059
Bearing: EN2031 / 1.3505.9 / AISI E52100
Flange: EN2213 / 1.7734.5 Cadmium Plated

EN3060
Bearing: EN2031 / 1.3505.9 / AISI E52100 Cadmium Plated
Flange: EN2213 / 1.7734.5 Cadmium Plated

EN3061
Bearing: EN2030 / 1.3544.9 / AISI 440C
Flange: EN2539 / 1.4548.3 / 17-4PH H1100

Technical Specification
EN3727

** Inch dimensions are for reference only. | * Permanently marked in non-functional area.*

Schematic Drawing

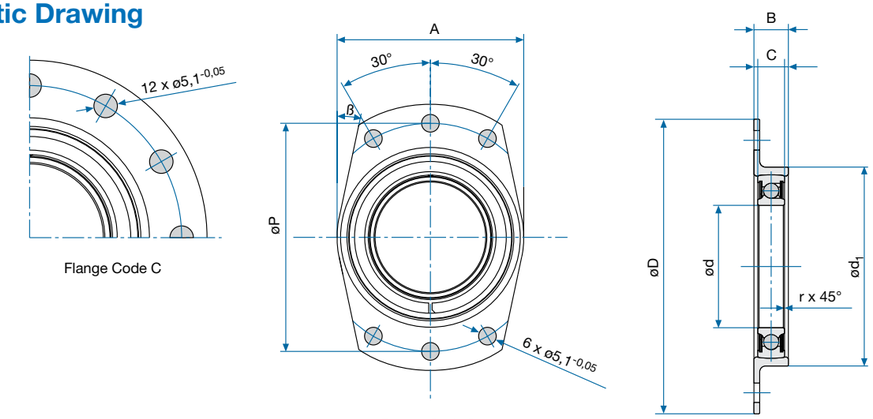

Specifications

EN3059 / EN3060 / EN3061

Diameter Code	A		P nominal		r		Tilting Torque		ß	Tilting Angle
	±0.250	±0.0098								
	mm	Inch	mm	Inch	mm	Inch	Ncm	In.-lbs	±1°	min.
16	35.000	1.3780	47.000	1.8504	0.300 to 0.800	0.0118 to 0.0315	0.800 to 3.000	7.0806 to 26.5523	-	4°
20	41.000	1.6142	52.000	2.0472	0.300 to 0.800	0.0118 to 0.0315	0.800 to 3.000	7.0806 to 26.5523	7°	3°30´
25	46.000	1.8110	57.000	2.2441	0.300 to 0.800	0.0118 to 0.0315	0.800 to 3.000	7.0806 to 26.5523	7°	3°
32	54.000	2.1260	66.000	2.5984	0.300 to 0.800	0.0118 to 0.0315	1.000 to 4.000	8.8508 to 35.4030	12°	2°30´
35	58.000	2.2835	69.000	2.7165	0.300 to 0.800	0.0118 to 0.0315	1.000 to 4.000	8.8508 to 35.4030	12°	2°20´
40	64.000	2.5197	75.000	2.9528	0.300 to 0.800	0.0118 to 0.0315	1.300 to 4.500	11.5060 to 39.8284	15°	2°
45	68.000	2.6772	80.000	3.1496	0.300 to 0.800	0.0118 to 0.0315	1.300 to 4.500	11.5060 to 39.8284	15°	2°
50	74.000	2.9134	86.000	3.3858	0.300 to 0.800	0.0118 to 0.0315	1.500 to 5.000	13.2761 to 44.2538	15°	1°40´
63	90.000	3.5433	100.000	3.9370	0.300 to 0.800	0.0118 to 0.0315	2.000 to 6.000	17.7015 to 53.1045	22°	1°30´

Diameter Code	Starting Torque				Radial Play		Axial Play (max.)		Static Radial Limit Load		Weight Flange Code C		Weight Flange Code D	
	Code E		Code P											
	Ncm	In.-lbs	Ncm	In.-lbs	mm	Inch	mm	Inch	kN	lbs	g	lbs	g	lbs
16	1.200	0.1062	0.800	0.0708	0.003 to 0.011	0.0001 to 0.0004	0.120	0.0047	15.2	3417	47	0.103	38	0.084
20	1.400	0.1239	0.900	0.0797	0.005 to 0.013	0.0002 to 0.0005	0.120	0.0047	18.7	4204	62	0.136	50	0.110
25	2.100	0.1859	1.200	0.1062	0.005 to 0.013	0.0002 to 0.0005	0.120	0.0047	20.6	4631	70	0.154	58	0.128
32	3.000	0.2655	2.100	0.1859	0.005 to 0.013	0.0002 to 0.0005	0.120	0.0047	24.5	5508	94	0.207	78	0.172
35	3.500	0.3098	2.700	0.2390	0.005 to 0.013	0.0002 to 0.0005	0.120	0.0047	25.5	5732	100	0.220	86	0.189
40	4.400	0.3894	3.300	0.2921	0.005 to 0.013	0.0002 to 0.0005	0.120	0.0047	29.5	6632	125	0.275	104	0.229
45	5.300	0.4691	3.900	0.3452	0.005 to 0.013	0.0002 to 0.0005	0.120	0.0047	32.4	7284	137	0.301	114	0.251
50	6.800	0.6018	4.800	0.4248	0.005 to 0.013	0.0002 to 0.0005	0.120	0.0047	35.3	7935	155	0.341	129	0.284
63	11.300	1.0001	8.300	0.7346	0.005 to 0.013	0.0002 to 0.0005	0.120	0.0047	39.2	8812	210	0.462	178	0.392

Contact

USA: KAMATICS CORPORATION 1330 Blue Hills Avenue Bloomfield, CT 06002 USA | **Tel:** +1 860 243 9704 | **E-mail:** KSB@kaman.com
GERMANY: RWG GERMANY GmbH Medbacher Weg 1 D-91315 Höchstadt a. d. Aisch | **Tel:** +49 (91 93) 50105 100 | **E-mail:** RWG@kaman.com

Rolling-Element Bearings

EN4041

- Single Row
- Flanged Type
- Self-Aligning
- Full Complement

Specifications

Diameter Code	d		Δ dmp		D		B		C		d_1	
					±0.200	±0.0079	±0.150	±0.0059	-0.120	-0.0047	±0.050	±0.0020
	mm	Inch	mm	Inch	mm	Inch	mm	Inch	mm	Inch	mm	Inch
32	32.000	1.2598	-0.012	-0.0005	77.000	3.0315	9.000	0.3543	7.000	0.2756	52.000	2.0472
35	35.000	1.3780	-0.012	-0.0005	80.000	3.1496	9.000	0.3543	7.000	0.2756	55.000	2.1654
40	40.000	1.5748	-0.012	-0.0005	86.000	3.3858	10.000	0.3937	8.000	0.3150	61.000	2.4016
45	45.000	1.7717	-0.012	-0.0005	91.000	3.5827	10.000	0.3937	8.000	0.3150	66.000	2.5984
50	50.000	1.9685	-0.012	-0.0005	97.000	3.8189	10.000	0.3937	8.000	0.3150	72.000	2.8346
63	63.000	2.4803	-0.015	-0.0006	111.000	4.3701	11.000	0.4331	9.000	0.3543	86.000	3.3858

Diameter Code	d_2		A		P nominal		L		L_1		ß	Tilting Angle
	-0.100	-0.0039	±1.000	±0.0394			±0.150	±0.0059	±0.100	±0.0039		
	mm	Inch	mm	Inch	mm	Inch	mm	Inch	mm	Inch	±1°	min.
32	35.000	1.3780	55.000	2.1654	66.000	2.5984	19.000	0.7480	5.000	0.1969	12°	2°30´
35	38.000	1.4961	58.000	2.2835	69.000	2.7165	19.000	0.7480	5.000	0.1969	12°	2°20´
40	43.000	1.6929	64.000	2.5197	75.000	2.9528	20.000	0.7874	5.000	0.1969	15°	2°
45	48.000	1.8898	68.000	2.6772	80.000	3.1496	20.000	0.7874	5.000	0.1969	15°	2°
50	53.000	2.0866	74.000	2.9134	86.000	3.3858	20.000	0.7874	5.000	0.1969	15°	1°40´
63	67.000	2.6378	90.000	3.5433	100.000	3.9370	21.000	0.8268	5.000	0.1969	22°	1°30´

Diameter Code	r		Tilting Torque		Starting Torque			
					Code E		Code P	
	mm	Inch	Nm	In.-lbs	Ncm	In.-lbs	Ncm	In.-lbs
32	0.300 to 0.800	0.0118 to 0.0315	1.000 to 4.000	8.8508 to 35.4030	3.000	0.2655	2.100	0.1859
35	0.300 to 0.800	0.0118 to 0.0315	1.000 to 4.000	8.8508 to 35.4030	3.500	0.3098	2.700	0.2390
40	0.300 to 0.800	0.0118 to 0.0315	1.300 to 4.500	11.5060 to 39.8284	4.400	0.3894	3.300	0.2921
45	0.300 to 0.800	0.0118 to 0.0315	1.300 to 4.500	11.5060 to 39.8284	5.300	0.4691	3.900	0.3452
50	0.300 to 0.800	0.0118 to 0.0315	1.500 to 5.000	13.2761 to 44.2538	6.800	0.6018	4.800	0.4248
63	0.300 to 0.800	0.0118 to 0.0315	2.000 to 6.000	17.7015 to 53.1045	11.300	1.0001	8.300	0.7346

Schematic Drawing

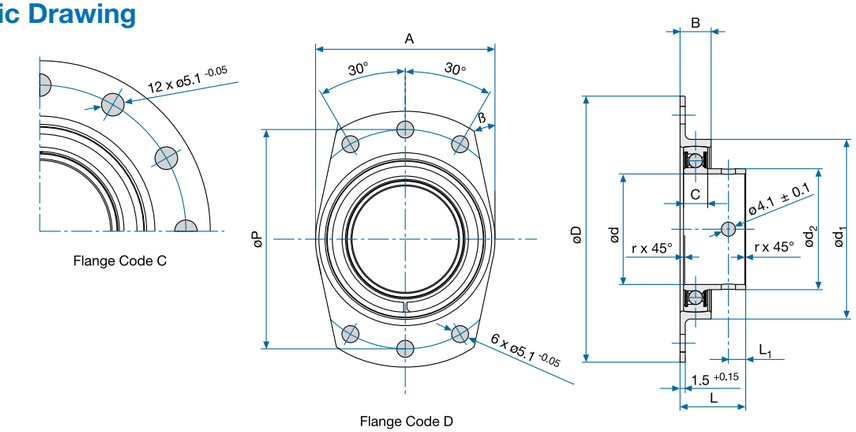

Specifications

EN4041

Diameter Code	Radial Play		Axial Play (max.)		Static Radial Limit Load		Weight Flange Code D		Weight Flange Code C	
	mm	Inch	mm	Inch	kN	lbs	g	lbs	g	lbs
32	0.002 to 0.007	0.0001 to 0.0003	0.120	0.0047	24.5	5508	91	0.200	107	0.235
35	0.002 to 0.009	0.0001 to 0.0004	0.120	0.0047	25.5	5732	97	0.213	125	0.275
40	0.002 to 0.009	0.0001 to 0.0004	0.120	0.0047	29.5	6632	121	0.266	143	0.315
45	0.002 to 0.009	0.0001 to 0.0004	0.120	0.0047	32.4	7284	136	0.299	155	0.341
50	0.002 to 0.009	0.0001 to 0.0004	0.120	0.0047	35.3	7935	152	0.334	175	0.385
63	0.002 to 0.009	0.0001 to 0.0004	0.120	0.0047	39.2	8812	205	0.451	235	0.517

Designation

EN4041
Number of Standard

A
Grease Type
A: NATO G 354 / MIL-PRF-23827
B: NATO G 395 / MIL-PRF-81322

32
Diameter Code

P
Protection
E: Sealed
P: Shielded (CRES)

C
Flange Type (See Schematic Drawing)

T
Surface Treatment
C: Passivated
No Code: None

Part Number Example
EN4041 A 32 P C T

Bearing Materials:

Series
EN4041

Material
EN2031 / 1.3505.9 / AISI E52100

Flange
EN2539 / 1.4548.3 / 17-4PH H1100

Technical Specification
EN3727

** Inch dimensions are for reference only. | * Permanently marked in non-functional area.*

Contact

USA: KAMATICS CORPORATION 1330 Blue Hills Avenue Bloomfield, CT 06002 USA | **Tel:** +1 860 243 9704 | **E-mail:** KSB@kaman.com
GERMANY: RWG GERMANY GmbH Medbacher Weg 1 D-91315 Höchstadt a. d. Aisch | **Tel:** +49 (91 93) 50105 100 | **E-mail:** RWG@kaman.com

Rolling-Element Bearings

FTRCE

- Single Row
- Flanged Type
- Self-Aligning
- Full Complement

Specifications

Diameter Code	d		Δ dmp		D		B		C		d_1	
					±0.250	±0.0098	±0.150	±0.0059	-0.100	-0.0039	±0.050	±0.0020
	mm	Inch	mm	Inch	mm	Inch	mm	Inch	mm	Inch	mm	Inch
16	16.000	0.6299	-0.008	-0.0003	58.000	2.2835	8.000	0.3150	6.000	0.2362	33.000	1.2992
20	20.000	0.7874	-0.010	-0.0004	63.000	2.4803	9.000	0.3543	7.000	0.2756	38.000	1.4961
25	25.000	0.9843	-0.010	-0.0004	68.000	2.6772	9.000	0.3543	7.000	0.2756	43.000	1.6929
32	32.000	1.2598	-0.012	-0.0005	77.000	3.0315	9.000	0.3543	7.000	0.2756	52.000	2.0472
35	35.000	1.3780	-0.012	-0.0005	80.000	3.1496	9.000	0.3543	7.000	0.2756	55.000	2.1654
40	40.000	1.5748	-0.012	-0.0005	86.000	3.3858	10.000	0.3937	8.000	0.3150	61.000	2.4016
45	45.000	1.7717	-0.012	-0.0005	91.000	3.5827	10.000	0.3937	8.000	0.3150	66.000	2.5984
50	50.000	1.9685	-0.012	-0.0005	97.000	3.8189	10.000	0.3937	8.000	0.3150	72.000	2.8346
63	63.000	2.4803	-0.015	-0.0006	111.000	4.3701	11.000	0.4331	9.000	0.3543	86.000	3.3858

Diameter Code	d_2		A		P		r	
			±0.250	±0.0098	±0.100	±0.0039		
	mm	Inch	mm	Inch	mm	Inch	mm	Inch
16	18.600	0.7323	35.000	1.3780	47.000	1.8504	0.300 to 0.800	0.0118 to 0.0315
20	22.700	0.8937	41.000	1.6142	52.000	2.0472	0.300 to 0.800	0.0118 to 0.0315
25	27.700	1.0906	46.000	1.8110	57.000	2.2441	0.300 to 0.800	0.0118 to 0.0315
32	35.300	1.3898	54.000	2.1260	66.000	2.5984	0.300 to 0.800	0.0118 to 0.0315
35	39.050	1.5374	58.000	2.2835	69.000	2.7165	0.300 to 0.800	0.0118 to 0.0315
40	43.000	1.6929	64.000	2.5197	75.000	2.9528	0.300 to 0.800	0.0118 to 0.0315
45	48.350	1.9035	68.000	2.6772	80.000	3.1496	0.300 to 0.800	0.0118 to 0.0315
50	53.300	2.0984	74.000	2.9134	86.000	3.3858	0.300 to 0.800	0.0118 to 0.0315
63	67.600	2.6614	90.000	3.5433	100.000	3.9370	0.300 to 0.800	0.0118 to 0.0315

Diameter Code	Tilting Torque		Starting Torque				ß	Titling Angle
			Code E / (max.)		No Code / (max.)			
	Ncm	In.-lbs	Ncm	In.-lbs	Ncm	In.-lbs		
16	0.800 to 3.000	0.0708 to 0.2655	1.150	0.1018	0.800	0.0708	–	4°
20	0.800 to 3.000	0.0708 to 0.2655	1.350	0.1195	0.900	0.0797	7°	3°30´
25	0.800 to 3.000	0.0708 to 0.2655	2.100	0.1859	1.200	0.1062	7°	3°
32	1.000 to 4.000	0.0885 to 0.3540	3.000	0.2655	2.100	0.1859	12°	2°30´
35	1.000 to 4.000	0.0885 to 0.3540	3.450	0.3053	2.700	0.2390	15°	2°20´
40	1.300 to 4.500	0.1151 to 0.3983	4.350	0.3850	3.300	0.2921	15°	2°
45	1.300 to 4.500	0.1151 to 0.3983	5.250	0.4646	3.900	0.3452	15°	2°
50	1.500 to 5.000	0.1328 to 0.4425	6.750	0.5974	4.800	0.4248	15°	1°40´
63	2.000 to 6.000	0.1770 to 0.5310	11.250	0.9956	8.300	0.7346	22°	1°30´

Schematic Drawing

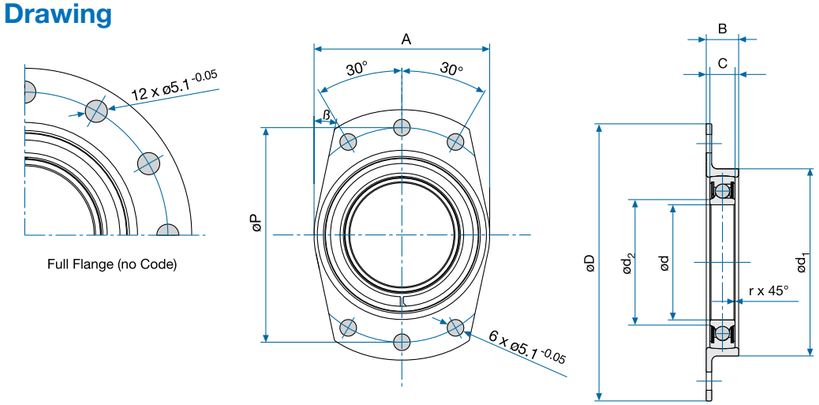

Specifications

FTRCE

Diameter Code	Radial Play		Axial Play (max.)		Static Radial Limit Load		Weight Full Flange No Code		Weight Full Flange Code C	
	mm	Inch	mm	Inch	kN	lbs	g	lbs	g	lbs
16	0.003 to 0.011	0.0001 to 0.0004	0.120	0.0047	15.2	3417	47	0.103	31	0.068
20	0.005 to 0.013	0.0002 to 0.0005	0.120	0.0047	18.7	4204	62	0.136	52	0.114
25	0.005 to 0.013	0.0002 to 0.0005	0.120	0.0047	20.6	4631	70	0.154	60	0.132
32	0.005 to 0.013	0.0002 to 0.0005	0.120	0.0047	24.5	5508	94	0.207	80	0.176
35	0.005 to 0.013	0.0002 to 0.0005	0.120	0.0047	25.5	5732	100	0.220	85	0.187
40	0.005 to 0.013	0.0002 to 0.0005	0.120	0.0047	29.5	6632	125	0.275	110	0.242
45	0.005 to 0.013	0.0002 to 0.0005	0.120	0.0047	32.4	7284	137	0.301	120	0.264
50	0.005 to 0.013	0.0002 to 0.0005	0.120	0.0047	35.3	7935	155	0.341	135	0.297
63	0.005 to 0.013	0.0002 to 0.0005	0.120	0.0047	39.2	8812	210	0.462	185	0.407

Designation

FTRCE
Number of Standard

40
Diameter Code

A
Grease Type
A: NATO G 354 / MIL-PRF-23827
B: NATO G 395 / MIL-PRF-81322

E
Protection
No Code: Shielded
E: Sealed

C
Flange Type (See Schematic Drawing)

1.3544.9
Material

Bearing Materials:

No Code
Flange: EN 2213 / 1.7734.5 Cadmium Plated
Rings + Balls: EN2031 / 1.3505.9 / AISI E52100

1.3544.9
Flange: EN2136 / 1.4044.6 / AISI 431 Cadmium Plated
Rings + Balls: EN2030 / 1.3544.9 / AISI 440C

Part Number Example
FTRCE 40 A E C 1.3544.9

** Inch dimensions are for reference only. | * Permanently marked in non-functional area.*

Contact

USA: KAMATICS CORPORATION 1330 Blue Hills Avenue Bloomfield, CT 06002 USA | **Tel:** +1 860 243 9704 | **E-mail:** KSB@kaman.com
GERMANY: RWG GERMANY GmbH Medbacher Weg 1 D-91315 Höchstadt a. d. Aisch | **Tel:** +49 (91 93) 50105 100 | **E-mail:** RWG@kaman.com

Rolling-Element Bearings

FTRCEI

- Single Row
- Flanged Type
- Self-Aligning
- Full Complement

Specifications

Diameter Code	d		Δ dmp		D		B		C	
					-0.250	-0.0098	±0.150	±0.0059	-0.100	-0.0039
	mm	Inch	mm	Inch	mm	Inch	mm	Inch	mm	Inch
32	32.000	1.2598	-0.011 to + 0.003	-0.0004 to +0.0001	77.000	3.0315	9.000	0.3543	7.000	0.2756
35	35.000	1.3780	-0.011 to + 0.003	-0.0004 to +0.0001	80.000	3.1496	9.000	0.3543	7.000	0.2756
40	40.000	1.5748	-0.011 to + 0.003	-0.0004 to +0.0001	86.000	3.3858	10.000	0.3937	8.000	0.3150
45	45.000	1.7717	-0.011 to + 0.003	-0.0004 to +0.0001	91.000	3.5827	10.000	0.3937	8.000	0.3150
50	50.000	1.9685	-0.011 to + 0.003	-0.0004 to +0.0001	97.000	3.8189	10.000	0.3937	8.000	0.3150
63	63.000	2.4803	-0.012 to + 0.003	-0.0005 to +0.0001	111.000	4.3701	11.000	0.4331	9.000	0.3543

Diameter Code	d_1		d_2		A		P		L		L_1	
	±0.050	±0.0020	-0.100	-0.0039	±0.250	±0.0039	±0.100	±0.0039	±0.150	±0.0059	±0.100	±0.0039
	mm	Inch	mm	Inch	mm	Inch	mm	Inch	mm	Inch	mm	Inch
32	52.000	2.0472	35.000	1.3780	54.000	2.1260	66.000	2.5984	19.000	0.7480	5.000	0.1969
35	55.000	2.1654	38.000	1.4961	58.000	2.2835	69.000	2.7165	19.000	0.7480	5.000	0.1969
40	61.000	2.4016	43.000	1.6929	64.000	2.5197	75.000	2.9528	20.000	0.7874	5.000	0.1969
45	66.000	2.5984	48.000	1.8898	68.000	2.6772	80.000	3.1496	20.000	0.7874	5.000	0.1969
50	72.000	2.8346	53.000	2.0866	74.000	2.9134	86.000	3.3858	20.000	0.7874	5.000	0.1969
63	86.000	3.3858	67.000	2.6378	90.000	3.5433	100.000	3.9370	21.000	0.8268	5.000	0.1969

Diameter Code	r		Tilting Torque		Starting Torque			
					Code E / (max.)		Code P / (max.)	
	mm	Inch	Ncm	In.-lbs	Ncm	In.-lbs	Ncm	In.-lbs
32	0.300 to 0.800	0.0118 to 0.0315	5.000 to 10.000	0.4425 to 0.8850	3.000	0.2655	2.100	0.1859
35	0.300 to 0.800	0.0118 to 0.0315	5.000 to 11.000	0.4425 to 0.9735	3.450	0.3053	2.700	0.2390
40	0.300 to 0.800	0.0118 to 0.0315	8.000 to 14.000	0.7080 to 1.2390	4.350	0.3850	3.300	0.2921
45	0.300 to 0.800	0.0118 to 0.0315	9.000 to 15.000	0.7965 to 1.3275	5.250	0.4646	3.900	0.3452
50	0.300 to 0.800	0.0118 to 0.0315	9.000 to 18.000	0.7965 to 1.5929	6.750	0.5974	4.800	0.4248
63	0.300 to 0.800	0.0118 to 0.0315	10.000 to 20.000	0.8850 to 1.7699	11.250	0.9956	8.250	0.7301

Schematic Drawing

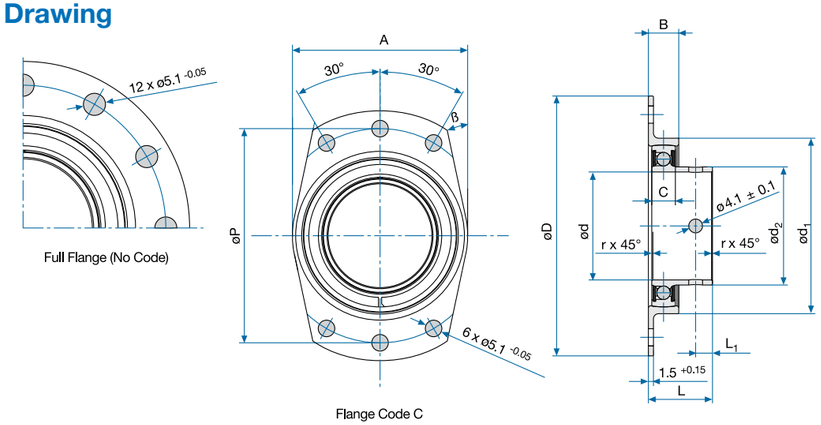

Specifications

FTRCEI

Diameter Code	Radial Play		Axial Play (max.)		Static Radial Limit Load		Weight Flange Code C		Weight Flange No Code		ß	Tilting Angle
	mm	Inch	mm	Inch	kN	In.-lbs	g	lbs	g	lbs		
32	0.005 to 0.013	0.0002 to 0.0005	0.120	0.0047	25.0	5620	91	0.200	107	0.235	12°	2°30´
35	0.005 to 0.013	0.0002 to 0.0005	0.120	0.0047	27.0	6070	97	0.213	125	0.275	15°	2°20´
40	0.005 to 0.013	0.0002 to 0.0005	0.120	0.0047	30.0	6744	121	0.266	143	0.315	15°	2°
45	0.005 to 0.013	0.0002 to 0.0005	0.120	0.0047	33.0	7418	136	0.299	155	0.341	15°	2°
50	0.005 to 0.013	0.0002 to 0.0005	0.120	0.0047	36.0	8093	152	0.334	175	0.385	15°	1°40´
63	0.005 to 0.013	0.0002 to 0.0005	0.120	0.0047	40.0	8992	205	0.451	235	0.517	22°	1°30´

Designation

FTRCEI
Number of Standard

32
Diameter Code

A
Grease Type
A: NATO G 354 / MIL-PRF-23827
B: NATO G 395 / MIL-PRF-81322

E
Protection
No Code: Shielded
E: Sealed

C
Flange Type (See Schematic Drawing)

1.3544.9
Material

Part Number Example
FTRCEI 32 A E C 1.3544.9

Bearing Materials:

No Code
Flange: EN2213 / 1.7734.5
Cadmium Plated
Rings + Balls: EN2031 / 1.3505.9 / AISI E52100

1.3544.9
Flange: EN2136 / 1.4044.6 / AISI 431
Cadmium Plated
Rings + Balls: EN2030 / 1.3544.9 / AISI 440C

** Inch dimensions are for reference only. | * Permanently marked in non-functional area.*

Contact

USA: KAMATICS CORPORATION 1330 Blue Hills Avenue Bloomfield, CT 06002 USA | **Tel:** +1 860 243 9704 | **E-mail:** KSB@kaman.com
GERMANY: RWG GERMANY GmbH Medbacher Weg 1 D-91315 Höchstadt a. d. Aisch | **Tel:** +49 (91 93) 50105 100 | **E-mail:** RWG@kaman.com

Rolling-Element Bearings

AGF

- Double Row
- Full Complement

Specifications

Diameter Code	d		Δ dmp		D		Δ Dmp		B		Δ Bmp	
	mm	Inch	mm	Inch	mm	Inch	mm	Inch	mm	Inch	mm	Inch
6	6.000	0.2362	-0.007 to +0.008	-0.0003 to +0.0003	19.000	0.7480	-0.008	-0.0003	17.000	0.6693	-0.120	-0.0047
8	8.000	0.3150	-0.007 to +0.008	-0.0003 to +0.0003	22.000	0.8661	-0.008	-0.0003	23.000	0.9055	-0.120	-0.0047
10	10.000	0.3937	-0.007 to +0.008	-0.0003 to +0.0003	24.000	0.9449	-0.008	-0.0003	23.000	0.9055	-0.120	-0.0047
12	12.000	0.4724	-0.008 to +0.010	-0.0003 to +0.0004	26.000	1.0236	-0.008	-0.0003	23.000	0.9055	-0.120	-0.0047
16	16.000	0.6299	-0.008 to +0.010	-0.0003 to +0.0004	30.000	1.1811	-0.008	-0.0003	23.000	0.9055	-0.120	-0.0047

Designation

AGF
Number of Standard

8
Diameter Code

A
Grease Type
A: NATO G 354 / MIL-PRF-23827
B: NATO G 395 / MIL-PRF-81322

C
Surface Treatment
No Code: None
C: Cadmium Plated Except Bore

E
Protection
No Code: Shielded
E: Sealed

1.3544.9
Material

Bearing Materials:

No Code
EN2031 / 1.3505.9 / AISI E52100

1.3544.9
EN2030 / 1.3544.9 / AISI 440C

Part Number Example
AGF 8 A C E 1.3544.9

** Inch dimensions are for reference only. | * Permanently marked in non-functional area.*

Schematic Drawing

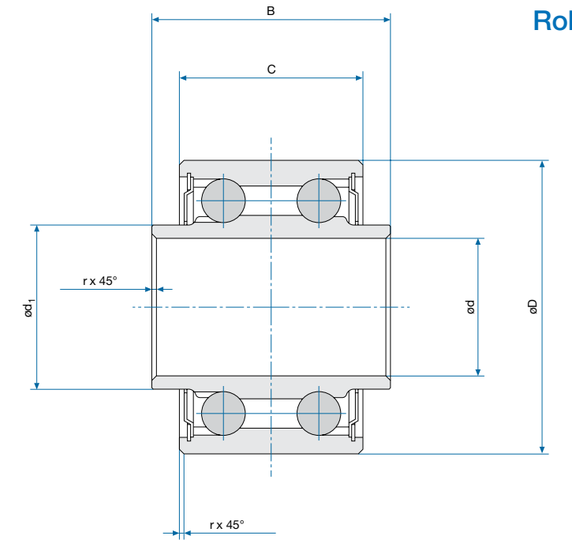

Specifications

AGF

Diameter Code	C		Δ Cmp		d_1		r		Δ rmp	
	mm	Inch	mm	Inch	mm	Inch	mm	Inch	mm	Inch
6	12.000	0.4724	-0.120	-0.0047	8.400	0.3307	0.500	0.0197	-0.200 to +0.300	-0.0079 to +0.0118
8	17.000	0.6693	-0.120	-0.0047	10.700	0.4213	0.500	0.0197	-0.200 to +0.300	-0.0079 to +0.0118
10	17.000	0.6693	-0.120	-0.0047	14.100	0.5551	0.500	0.0197	-0.200 to +0.300	-0.0079 to +0.0118
12	17.000	0.6693	-0.120	-0.0047	15.300	0.6024	0.500	0.0197	-0.200 to +0.300	-0.0079 to +0.0118
16	17.000	0.6693	-0.120	-0.0047	19.000	0.7480	0.500	0.0197	-0.200 to +0.300	-0.0079 to +0.0118

Diameter Code	Starting Torque				Diagonal Play		Static Limit Radial Load		Weight	
	Code E / (max.)		No Code / (max.)							
	Ncm	In.-lbs	Ncm	In.-lbs	mm	Inch	kN	lbs	g	lbs
6	0.500	0.0443	0.300	0.0266	0.050 to 0.250	0.0020 to 0.0098	16.6	3732	22	0.048
8	0.600	0.0531	0.400	0.0354	0.050 to 0.250	0.0020 to 0.0098	20.8	4676	34	0.075
10	0.900	0.0797	0.600	0.0531	0.050 to 0.250	0.0020 to 0.0098	24.0	5395	42	0.092
12	1.100	0.0974	0.700	0.0620	0.050 to 0.250	0.0020 to 0.0098	26.3	5912	46	0.101
16	1.400	0.1239	0.900	0.0797	0.050 to 0.250	0.0020 to 0.0098	31.8	7149	57	0.125

Contact

USA: KAMATICS CORPORATION 1330 Blue Hills Avenue Bloomfield, CT 06002 USA | **Tel:** +1 860 243 9704 | **E-mail:** KSB@kaman.com
GERMANY: RWG GERMANY GmbH Medbacher Weg 1 D-91315 Höchstadt a. d. Aisch | **Tel:** +49 (91 93) 50105 100 | **E-mail:** RWG@kaman.com

Rolling-Element Bearings

EN3056 / EN3057 / EN3058

- Double Row
- Full Complement

Specifications

Diameter Code	d		Δ dmp		D		Δ Dmp	
	mm	Inch	mm	Inch	mm	Inch	mm	Inch
08	8.000	0.3150	-0.007 to +0.008	-0.0003 to +0.0003	22.000	0.8661	-0.008	-0.0003
10	10.000	0.3937	-0.007 to +0.008	-0.0003 to +0.0003	26.000	1.0236	-0.008	-0.0003
12	12.000	0.4724	-0.008 to +0.010	-0.0003 to +0.0004	28.000	1.1024	-0.008	-0.0003
15	15.000	0.5906	-0.008 to +0.010	-0.0003 to +0.0004	32.000	1.2598	-0.009	-0.0004
17	17.000	0.6693	-0.008 to +0.010	-0.0003 to +0.0004	35.000	1.3780	-0.009	-0.0004
20	20.000	0.7874	-0.009 to +0.012	-0.0004 to +0.0005	42.000	1.6535	-0.009	-0.0004

Diameter Code	B		Δ Bmp		C		Δ Cmp		d_1	
	mm	Inch	mm	Inch	mm	Inch	mm	Inch	mm	Inch
08	22.000	0.8661	-0.120	-0.0047	17.000	0.6693	-0.120	-0.0047	10.600	0.4173
10	24.000	0.9449	-0.120	-0.0047	18.000	0.7087	-0.120	-0.0047	12.600	0.4961
12	24.000	0.9449	-0.120	-0.0047	18.000	0.7087	-0.120	-0.0047	14.700	0.5787
15	26.000	1.0236	-0.120	-0.0047	20.000	0.7874	-0.120	-0.0047	17.700	0.6969
17	28.000	1.1024	-0.120	-0.0047	22.000	0.8661	-0.120	-0.0047	20.200	0.7953
20	32.000	1.2598	-0.120	-0.0047	26.000	1.0236	-0.120	-0.0047	23.500	0.9252

Diameter Code	r		Δ rmp		Starting Torque			
					Code E / (max.)		Code P / (max.)	
	mm	Inch	mm	Inch	Ncm	In.-lbs	Ncm	In.-lbs
08	0.500	0.0197	-0.200 to +0.300	-0.0079 to +0.0118	0.600	0.0531	0.400	0.0354
10	0.500	0.0197	-0.200 to +0.300	-0.0079 to +0.0118	0.900	0.0797	0.600	0.0531
12	0.500	0.0197	-0.200 to +0.300	-0.0079 to +0.0118	1.100	0.0974	0.700	0.0620
15	0.500	0.0197	-0.200 to +0.300	-0.0079 to +0.0118	1.400	0.1239	0.900	0.0797
17	0.500	0.0197	-0.200 to +0.300	-0.0079 to +0.0118	1.700	0.1505	1.100	0.0974
20	0.500	0.0197	-0.200 to +0.500	-0.0079 to +0.0197	2.300	0.2036	1.500	0.1328

Schematic Drawing

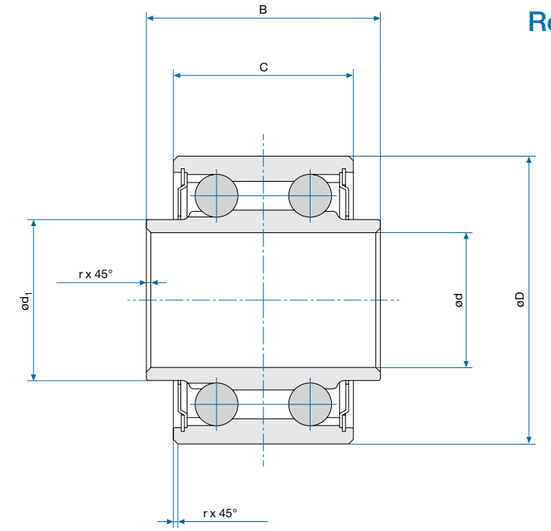

Specifications

EN3056 / EN3057 / EN3058

Diameter Code	Diagonal Play		Static Radial Limit Load		Static Axial Limit Load		Weight	
	mm	Inch	kN	lbs	kN	lbs	g	lbs
08	0.050 to 0.250	0.0020 to 0.0098	24.0	5395	10.9	2450	30	0.066
10	0.050 to 0.250	0.0020 to 0.0098	34.4	7733	15.6	3507	52	0.114
12	0.050 to 0.250	0.0020 to 0.0098	40.4	9082	18.4	4136	60	0.132
15	0.050 to 0.250	0.0020 to 0.0098	47.0	10566	21.4	4811	80	0.176
17	0.050 to 0.250	0.0020 to 0.0098	53.8	12094	24.5	5508	100	0.220
20	0.050 to 0.250	0.0020 to 0.0098	83.0	18658	37.7	8475	165	0.363

Designation

EN3056
Number of Standard

A
Grease Type
A: NATO G 354 / MIL-PRF-23827
B: NATO G 395 / MIL-PRF-81322

10
Diameter Code

P
Protection
No Code: Shielded
E: Sealed

Bearing Materials:

EN3056 Series
EN2031 / 1.3505.9 / AISI E52100

EN3057 Series
EN2031 / 1.3505.9 / AISI E52100
Cadmium Plated Except Bore

EN3058 Series
EN2030 / 1.3544.9 / AISI 440C

Technical Specification
EN3280

Part Number Example
EN3056 A 10 P

** Inch dimensions are for reference only. | * Permanently marked in non-functional area.*

Contact

USA: KAMATICS CORPORATION 1330 Blue Hills Avenue Bloomfield, CT 06002 USA | **Tel:** +1 860 243 9704 | **E-mail:** KSB@kaman.com
GERMANY: RWG GERMANY GmbH Medbacher Weg 1 D-91315 Höchstadt a. d. Aisch | **Tel:** +49 (91 93) 50105 100 | **E-mail:** RWG@kaman.com

Rolling-Element Bearings

ABS0134 / ABS0345

- Self-Aligning
- Double Row
- Full Complement
- Dimensions According to AS27643

Specifications

Diameter Code	d		Δ dmp		D		Δ Dmp		B		Δ Bmp	
	mm	Inch	mm	Inch	mm	Inch	mm	Inch	mm	Inch	mm	Inch
03	4.826	0.1900	-0.012	-0.0005	19.745	0.7774	-0.012	-0.0005	12.700	0.5000	-0.120	-0.0047
04	6.350	0.2500	-0.012	-0.0005	22.895	0.9014	-0.012	-0.0005	17.449	0.6870	-0.120	-0.0047
05	7.937	0.3125	-0.012	-0.0005	31.750	1.2500	-0.012	-0.0005	20.624	0.8120	-0.120	-0.0047
06	9.525	0.3750	-0.012	-0.0005	36.512	1.4375	-0.012	-0.0005	23.798	0.9369	-0.120	-0.0047
08	12.700	0.5000	-0.012	-0.0005	42.862	1.6875	-0.012	-0.0005	25.400	1.0000	-0.120	-0.0047
10	15.875	0.6250	-0.012	-0.0005	49.212	1.9375	-0.012	-0.0005	28.575	1.1250	-0.120	-0.0047

Diameter Code	C		Δ Cmp		d_1		r_1 x 45°		r_2 x 45°	
							+0.380	+0.0150	+0.380	+0.0150
	mm	Inch	mm	Inch	mm	Inch	mm	Inch	mm	Inch
03	9.956	0.3920	-0.120	-0.0047	7.700	0.3031	0.120	0.0047	0.120	0.0047
04	11.785	0.4640	-0.120	-0.0047	10.922	0.4300	0.120	0.0047	0.120	0.0047
05	16.662	0.6560	-0.120	-0.0047	13.081	0.5150	0.380	0.0150	0.380	0.0150
06	19.050	0.7500	-0.120	-0.0047	14.326	0.5640	0.380	0.0150	0.380	0.0150
08	20.624	0.8120	-0.120	-0.0047	19.650	0.7736	0.380	0.0150	0.380	0.0150
10	23.790	0.9366	-0.120	-0.0047	22.072	0.8690	0.380	0.0150	0.380	0.0150

Diameter Code	Starting Torque				Radial Play Code N		Radial Play Code R	
	ABS0134 / (max.)		ABS0345 / (max.)					
	Ncm	In.-lbs	Ncm	In.-lbs	mm	Inch	mm	Inch
03	0.600	0.0531	0.900	0.0797	0.000 to 0.025	0.0000 to 0.0010	0.005 to 0.013	0.0002 to 0.0005
04	0.670	0.0593	1.000	0.0885	0.000 to 0.025	0.0000 to 0.0010	0.005 to 0.013	0.0002 to 0.0005
05	0.870	0.0770	1.300	0.1151	0.000 to 0.025	0.0000 to 0.0010	0.005 to 0.013	0.0002 to 0.0005
06	1.070	0.0947	1.600	0.1416	0.000 to 0.025	0.0000 to 0.0010	0.005 to 0.013	0.0002 to 0.0005
08	1.530	0.1354	2.300	0.2036	0.000 to 0.025	0.0000 to 0.0010	0.005 to 0.013	0.0002 to 0.0005
10	2.000	0.1770	3.000	0.2655	0.000 to 0.025	0.0000 to 0.0010	0.005 to 0.013	0.0002 to 0.0005

Schematic Drawing

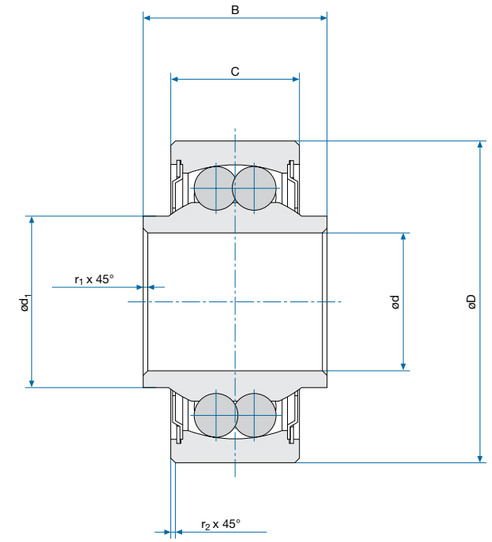

Specifications

ABS0134 / ABS0345

Diameter Code	Axial Play (max.)		Static Radial Limit Load		Static Axial Limit Load		Weight	
	mm	Inch	kN	lbs	kN	lbs	g	lbs
03	0.140	0.0055	6.3	1421	0.9	200	18	0.040
04	0.140	0.0055	7.9	1780	1.3	299	27	0.059
05	0.152	0.0060	16.6	3741	2.7	600	73	0.161
06	0.152	0.0060	22.7	5101	3.6	800	109	0.240
08	0.152	0.0060	31.9	7164	4.5	1000	163	0.359
10	0.178	0.0070	40.0	8999	5.8	1299	240	0.528

Designation

ABS0134
Number of Standard

03
Diameter Code

N
Radial Play
N: Normal
R: Reduced

Shields
CRES

Part Number Example
ABS0134 03 N

ABS0345
Number of Standard

N
Radial Play
N: Normal
R: Reduced

03
Diameter Code

Sealed Type
Seals (PTFE); Seal Retainers (CRES)

Part Number Example
ABS0345 N 03

Bearing Materials:

Materials
EN2030 / 1.3544.9 / AISI 440C Cadmium Plated Except Bore

Lubrication
NATO G 395 / MIL-PRF-81322

Technical Specification
SAE AS7949 / DAN446

** Inch dimensions are for reference only. | * Permanently marked in non-functional area.*

Contact

USA: KAMATICS CORPORATION 1330 Blue Hills Avenue Bloomfield, CT 06002 USA | **Tel:** +1 860 243 9704 | **E-mail:** KSB@kaman.com
GERMANY: RWG GERMANY GmbH Medbacher Weg 1 D-91315 Höchstadt a. d. Aisch | **Tel:** +49 (91 93) 50105 100 | **E-mail:** RWG@kaman.com

Rolling-Element Bearings

ABS0135 / ABS0346

- Double Row
- Full Complement
- Dimensions According to AS27644

Specifications

Diameter Code	d		Δ dmp		D		Δ Dmp		B		Δ Bmp	
	mm	Inch	mm	Inch	mm	Inch	mm	Inch	mm	Inch	mm	Inch
03	4.826	0.1900	-0.013	-0.0005	19.746	0.7774	-0.013	-0.0005	12.573	0.4950	-0.127	-0.0050
04	6.350	0.2500	-0.013	-0.0005	22.896	0.9014	-0.013	-0.0005	15.748	0.6200	-0.127	-0.0050
05	7.938	0.3125	-0.013	-0.0005	31.750	1.2500	-0.013	-0.0005	18.923	0.7450	-0.127	-0.0050
06	9.525	0.3750	-0.013	-0.0005	36.513	1.4375	-0.013	-0.0005	22.098	0.8700	-0.127	-0.0050
08	12.700	0.5000	-0.013	-0.0005	42.863	1.6875	-0.013	-0.0005	23.673	0.9320	-0.127	-0.0050
10	15.875	0.6250	-0.013	-0.0005	49.213	1.9375	-0.013	-0.0005	25.273	0.9950	-0.127	-0.0050

Diameter Code	C		Δ Cmp		d_1		r_1 x 45°		Δ $r_1$mp	
	mm	Inch	mm	Inch	mm	Inch	mm	Inch	mm	Inch
03	12.014	0.4730	-0.127	-0.0050	7.670	0.3020	0.130	0.0051	+0.380	+0.0150
04	12.471	0.4910	-0.127	-0.0050	10.410	0.4098	0.130	0.0051	+0.380	+0.0150
05	17.450	0.6870	-0.127	-0.0050	11.910	0.4689	0.380	0.0150	+0.380	+0.0150
06	20.168	0.7940	-0.127	-0.0050	14.000	0.5512	0.380	0.0150	+0.380	+0.0150
08	21.742	0.8560	-0.127	-0.0050	18.670	0.7350	0.380	0.0150	+0.380	+0.0150
10	23.368	0.9200	-0.127	-0.0050	22.610	0.8902	0.380	0.0150	+0.380	+0.0150

Diameter Code	r_2 x 45°		Δ $r_2$mp		Starting Torque				Radial Play Code N	
					ABS0346 / (max.)		ABS0135 / (max.)			
	mm	Inch	mm	Inch	Ncm	In.-lbs	Ncm	In.-lbs	mm	Inch
03	0.460	0.0181	+0.380	+0.0150	0.500	0.0443	0.330	0.0292	0.010 to 0.025	0.0004 to 0.0010
04	0.810	0.0319	+0.380	+0.0150	0.650	0.0575	0.430	0.0381	0.010 to 0.025	0.0004 to 0.0010
05	0.810	0.0319	+0.380	+0.0150	0.960	0.0850	0.640	0.0566	0.010 to 0.025	0.0004 to 0.0010
06	0.810	0.0319	+0.380	+0.0150	1.320	0.1168	0.880	0.0779	0.010 to 0.025	0.0004 to 0.0010
08	1.120	0.0441	+0.380	+0.0150	1.680	0.1487	1.120	0.0991	0.010 to 0.025	0.0004 to 0.0010
10	1.120	0.0441	+0.380	+0.0150	2.040	0.1805	1.360	0.1204	0.010 to 0.025	0.0004 to 0.0010

Schematic Drawing

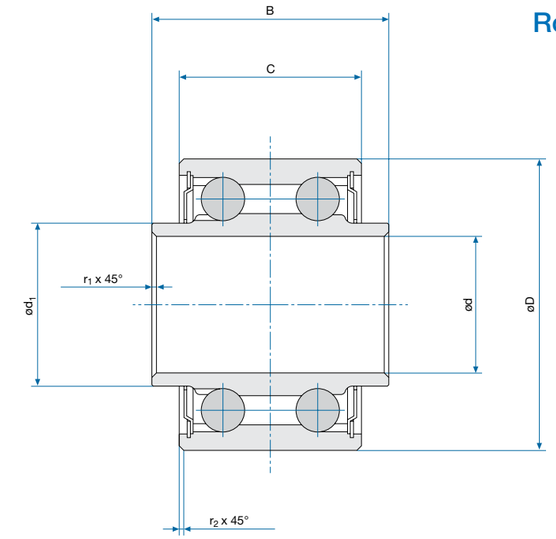

Specifications

ABS0135 / ABS0346

Diameter Code	Axial Play (max.)		Static Radial Limit Load		Static Axial Limit Load		Weight	
	mm	Inch	kN	lbs	kN	lbs	g	lbs
03	0.127	0.0050	13.1	2949	7.6	1699	18	0.040
04	0.127	0.0050	23.9	5370	8.0	1801	27	0.059
05	0.152	0.0060	48.9	10999	17.8	3999	77	0.169
06	0.152	0.0060	70.1	15758	23.6	5301	118	0.260
08	0.178	0.0070	105.0	23597	34.7	7801	172	0.378
10	0.178	0.0070	126.3	28399	41.8	9399	240	0.528

Designation

ABS0135
Number of Standard

03
Diameter Code

N
Radial / Axial Play
N: Radial Play
No Code: Axial Play

Shields
CRES

Part Number Example
ABS0135 03 N

ABS0346
Number of Standard

N
Radial / Axial Play
N: Radial Play
No Code: Axial Play

03
Diameter Code
Sealed Type
Seals (PTFE); Seal Retainers (CRES)

Part Number Example
ABS0346 N 03

Bearing Materials:

Materials
EN2030 / 1.3544.9 / AISI 440C Cadmium Plated Except Bore

Lubrication
NATO G 395 / MIL-PRF-81322

Technical Specification
SAE AS7949

** Inch dimensions are for reference only. | * Permanently marked in non-functional area.*

Contact

USA: KAMATICS CORPORATION 1330 Blue Hills Avenue Bloomfield, CT 06002 USA | **Tel:** +1 860 243 9704 | **E-mail:** KSB@kaman.com
GERMANY: RWG GERMANY GmbH Medbacher Weg 1 D-91315 Höchstadt a. d. Aisch | **Tel:** +49 (91 93) 50105 100 | **E-mail:** RWG@kaman.com

Rolling-Element Bearings

ABS0363

- Self-Aligning
- Full Complement
- Double Row

Specifications

Diameter Code	d		Δ dmp		D		Δ Dmp		B		Δ Bmp	
	mm	Inch	mm	Inch	mm	Inch	mm	Inch	mm	Inch	mm	Inch
03	4.826	0.1900	-0.013	-0.0005	16.000	0.6299	-0.008	-0.0003	12.000	0.4724	-0.130	-0.0051
04	6.350	0.2500	-0.013	-0.0005	19.000	0.7480	-0.009	-0.0004	14.000	0.5512	-0.130	-0.0051
05	7.938	0.3125	-0.013	-0.0005	24.000	0.9449	-0.009	-0.0004	15.000	0.5906	-0.130	-0.0051
06	9.525	0.3750	-0.013	-0.0005	30.000	1.1811	-0.009	-0.0004	20.000	0.7874	-0.130	-0.0051
08	12.700	0.5000	-0.013	-0.0005	32.000	1.2598	-0.011	-0.0004	20.000	0.7874	-0.130	-0.0051
10	15.875	0.6250	-0.013	-0.0005	35.000	1.3780	-0.011	-0.0004	20.000	0.7874	-0.130	-0.0051
11	17.463	0.6875	-0.013	-0.0005	40.000	1.5748	-0.011	-0.0004	22.000	0.8661	-0.130	-0.0051
12	19.050	0.7500	-0.013	-0.0005	47.000	1.8504	-0.011	-0.0004	24.000	0.9449	-0.130	-0.0051

Diameter Code	C		Δ Cmp		d_1		r		Δ rmp		Weight	
	mm	Inch	mm	Inch	mm	Inch	mm	Inch	mm	Inch	g	lbs
03	8.000	0.3150	-0.130	-0.0051	7.600	0.2992	0.130	0.0051	+0.380	+0.0150	9	0.020
04	10.000	0.3937	-0.130	-0.0051	8.600	0.3386	0.130	0.0051	+0.380	+0.0150	15	0.033
05	10.000	0.3937	-0.130	-0.0051	11.100	0.4370	0.380	0.0150	+0.380	+0.0150	27	0.059
06	14.000	0.5512	-0.130	-0.0051	13.600	0.5354	0.380	0.0150	+0.380	+0.0150	57	0.125
08	14.000	0.5512	-0.130	-0.0051	15.400	0.6063	0.380	0.0150	+0.380	+0.0150	62	0.136
10	14.000	0.5512	-0.130	-0.0051	18.500	0.7283	0.380	0.0150	+0.380	+0.0150	75	0.165
11	16.000	0.6299	-0.130	-0.0051	21.200	0.8346	0.380	0.0150	+0.380	+0.0150	110	0.242
12	18.000	0.7087	-0.130	-0.0051	23.600	0.9291	0.380	0.0150	+0.380	+0.0150	170	0.374

Schematic Drawing

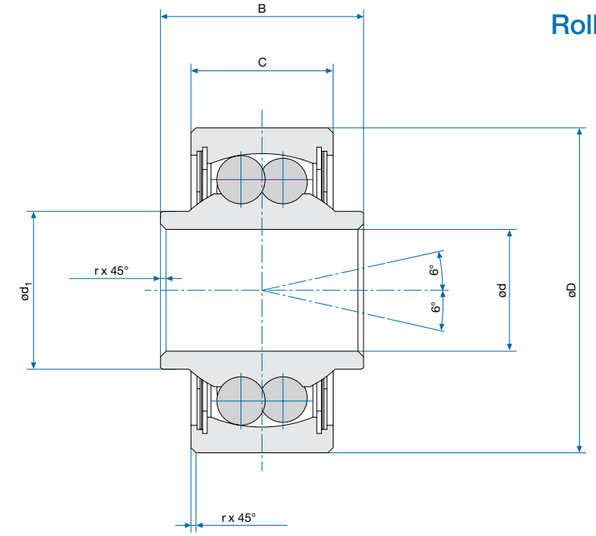

Specifications

ABS0363

Diameter Code	Starting Torque (max.)		Radial Play Code N		Radial Play Code R		Axial Play		Static Radial Limit Load		Static Axial Limit Load	
	Ncm	In.-lbs	mm	Inch	mm	Inch	mm	Inch	kN	lbs	kN	lbs
03	0.800	0.071	0.002 to 0.013	0.0001 to 0.0005	0.002 to 0.006	0.0001 to 0.0002	0.070	0.0028	3.92	881	1.22	274
04	0.900	0.080	0.002 to 0.013	0.0001 to 0.0005	0.002 to 0.006	0.0001 to 0.0002	0.070	0.0028	5.88	1322	1.83	411
05	1.300	0.115	0.002 to 0.013	0.0001 to 0.0005	0.002 to 0.007	0.0001 to 0.0003	0.080	0.0031	9.80	2203	3.05	686
06	1.600	0.142	0.002 to 0.013	0.0001 to 0.0005	0.002 to 0.007	0.0001 to 0.0003	0.080	0.0031	14.11	3172	4.44	998
08	2.000	0.177	0.003 to 0.018	0.0001 to 0.0007	0.003 to 0.009	0.0001 to 0.0004	0.080	0.0031	16.66	3745	5.20	1169
10	2.500	0.221	0.003 to 0.018	0.0001 to 0.0007	0.003 to 0.009	0.0001 to 0.0004	0.080	0.0031	19.01	4273	5.94	1335
11	3.000	0.266	0.003 to 0.018	0.0001 to 0.0007	0.003 to 0.009	0.0001 to 0.0004	0.080	0.0031	24.50	5508	7.70	1731
12	4.000	0.354	0.003 to 0.018	0.0001 to 0.0007	0.003 to 0.009	0.0001 to 0.0004	0.080	0.0031	34.30	7711	10.70	2405

Designation

ABS0363
Number of Standard

06
Diameter Code

N
Radial Play
N: Normal
R: Reduced

Sealed Type:
Seals (PTFE); Seal Retainers (CRES)

Part Number Example
ABS0363 N 06

Bearing Materials:

No Code
EN2030 / 1.3544.9 / AISI 440C
Cadmium Plated Except Bore

Lubrication
NATO G 395 / MIL-PRF-81322

Technical Specification
SAE AS57949 / DAN446

** Inch dimensions are for reference only. | * Permanently marked in non-functional area.*

Contact

USA: KAMATICS CORPORATION 1330 Blue Hills Avenue Bloomfield, CT 06002 USA | **Tel:** +1 860 243 9704 | **E-mail:** KSB@kaman.com
GERMANY: RWG GERMANY GmbH Medbacher Weg 1 D-91315 Höchstadt a. d. Aisch | **Tel:** +49 (91 93) 50105 100 | **E-mail:** RWG@kaman.com

Rolling-Element Bearings

DP / NSA8105 / NSA8115

- Double Row
- Full Complement
- Dimensions According to AS27644

Specifications

Diameter Code	d		Δ dmp		D		Δ Dmp		B		Δ Bmp	
	mm	Inch	mm	Inch	mm	Inch	mm	Inch	mm	Inch	mm	Inch
03	4.826	0.1900	-0.0127	-0.0005	19.745	0.7774	-0.0127	-0.0005	12.573	0.4950	-0.127	-0.0050
04	6.350	0.2500	-0.0127	-0.0005	22.895	0.9014	-0.0127	-0.0005	15.748	0.6200	-0.127	-0.0050
05	7.937	0.3125	-0.0127	-0.0005	31.750	1.2500	-0.0127	-0.0005	18.923	0.7450	-0.127	-0.0050
06	9.525	0.3750	-0.0127	-0.0005	36.512	1.4375	-0.0127	-0.0005	22.098	0.8700	-0.127	-0.0050
08	12.700	0.5000	-0.0127	-0.0005	42.862	1.6875	-0.0127	-0.0005	23.672	0.9320	-0.127	-0.0050
10	15.875	0.6250	-0.0127	-0.0005	49.212	1.9375	-0.0127	-0.0005	25.273	0.9950	-0.127	-0.0050

Designation

NSA8115
Number of Series

03
Diameter Code

Material
EN2030 / 1.3544.9 / AISI 440C Cadmium Plated Except Bore

NSA 8105
Seals (PTFE);
Seal Retainers (CRES)

NSA 8115
Shielded (CRES)

Lubrication
NATO G 354 / MIL-PRF-23827

Technical Specification
SAE AS7949

Part Number Example
NSA8115 03

DP
Number of Series

P
Protection
P: Sealed
No Code: Shielded (CRES)

3
Diameter Code

G
Grease Type
G: Grease NATO G 354 / MIL-PRF-23827
No Code: NATO G 395 / MIL-PRF-81322

1.3544.9
Material

No Code
EN2031 / 1.3505.9 / AISI E52100 Cadmium Plated Except Bore

1.3544.9
EN2030 / 1.3544.9 / AISI 440C Cadmium Plated Except Bore

Technical Specification
SAE AS7949

Part Number Example
DP P 3 G 1.3544.9

** Inch dimensions are for reference only. | * Permanently marked in non-functional area.*

Schematic Drawing

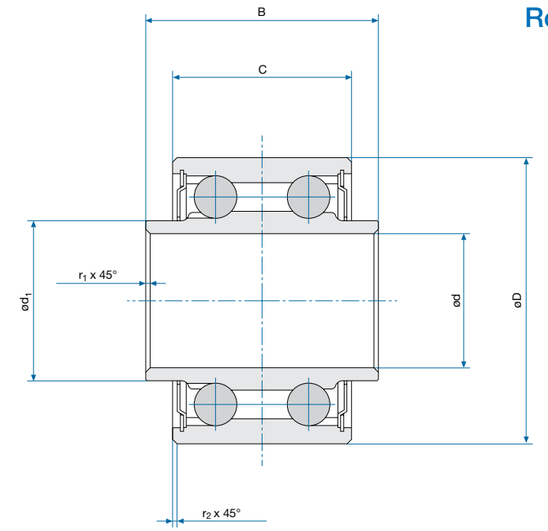

Specifications

DP / NSA8105 / NSA8115

Diameter Code	C		Δ Cmp		d_1		r_1 x 45°		r_2 x 45°	
	mm	Inch	mm	Inch	mm	Inch	mm	Inch	mm	Inch
03	12.014	0.4730	-0.127	-0.0050	7.670	0.3020	0.120 to 0.500	0.0047 to 0.0197	0.450 to 0.831	0.0177 to 0.0327
04	12.471	0.4910	-0.127	-0.0050	10.414	0.4100	0.120 to 0.500	0.0047 to 0.0197	0.813 to 1.194	0.0320 to 0.0470
05	17.449	0.6870	-0.127	-0.0050	11.912	0.4690	0.380 to 0.760	0.0150 to 0.0299	0.813 to 1.194	0.0320 to 0.0470
06	20.167	0.7940	-0.127	-0.0050	13.995	0.5510	0.380 to 0.760	0.0150 to 0.0299	0.813 to 1.194	0.0320 to 0.0470
08	21.742	0.8560	-0.127	-0.0050	18.670	0.7350	0.380 to 0.760	0.0150 to 0.0299	1.118 to 1.499	0.0440 to 0.0590
10	23.368	0.9200	-0.127	-0.0050	22.606	0.8900	0.380 to 0.760	0.0150 to 0.0299	1.118 to 1.499	0.0440 to 0.0590

Diameter Code	Radial Play		Axial Play (max.)		Static Radial Limit Load		Static Axial Limit Load		Weight	
	mm	Inch	mm	Inch	kN	lbs	kN	lbs	g	lbs
03	0.010 to 0.025	0.0004 to 0.0010	0.127	0.0050	13.2	2967	6.8	1529	18	0.040
04	0.010 to 0.025	0.0004 to 0.0010	0.152	0.0060	24.0	5395	7.2	1621	27	0.059
05	0.010 to 0.025	0.0004 to 0.0010	0.152	0.0060	49.0	11015	16.0	3599	77	0.169
06	0.010 to 0.025	0.0004 to 0.0010	0.152	0.0060	69.5	15624	21.2	4768	118	0.260
08	0.010 to 0.025	0.0004 to 0.0010	0.178	0.0070	104.0	23379	31.2	7021	172	0.378
10	0.010 to 0.025	0.0004 to 0.0010	0.178	0.0070	127.0	28550	37.6	8459	240	0.528

Contact

USA: KAMATICS CORPORATION 1330 Blue Hills Avenue Bloomfield, CT 06002 USA | **Tel:** +1 860 243 9704 | **E-mail:** KSB@kaman.com
GERMANY: RWG GERMANY GmbH Medbacher Weg 1 D-91315 Höchstadt a. d. Aisch | **Tel:** +49 (91 93) 50105 100 | **E-mail:** RWG@kaman.com

Rolling-Element Bearings

DP...W

- Double Row
- Angular Contact
- Full Complement

Specifications

Diameter Code	d		Δ dmp		D		Δ Dmp		B		Δ Bmp	
	mm	Inch	mm	Inch	mm	Inch	mm	Inch	mm	Inch	mm	Inch
3	4.826	0.1900	-0.013	-0.0005	19.746	0.7774	-0.013	-0.0005	12.573	0.4950	-0.127	-0.0050
4	6.350	0.2500	-0.013	-0.0005	22.895	0.9014	-0.013	-0.0005	15.748	0.6200	-0.127	-0.0050
5	7.937	0.3125	-0.013	-0.0005	31.750	1.2500	-0.013	-0.0005	18.923	0.7450	-0.127	-0.0050
6	9.525	0.3750	-0.013	-0.0005	36.512	1.4375	-0.013	-0.0005	22.098	0.8700	-0.127	-0.0050
8	12.700	0.5000	-0.013	-0.0005	42.862	1.6875	-0.013	-0.0005	23.672	0.9320	-0.127	-0.0050
10	15.875	0.6250	-0.013	-0.0005	49.212	1.9375	-0.013	-0.0005	25.273	0.9950	-0.127	-0.0050

Designation

DP W
Number of Series
Contact Angle: 20°

P
Protection
P: Sealed
No Code: Shielded (CRES)

3
Diameter Code

G
Grease Type
G: Grease NATO G 354 / MIL-PRF-23827
No Code: NATO G 395 / MIL-PRF-81322

1.3544.9
Material

Part Number Example
DP P 3 W G 1.3544.9

Bearing Materials:

No Code
EN2031 / 1.3505.9 / AISI E52100
Cadmium Plated Except Bore

1.3544.9
EN2030 / 1.3544.9 / AISI 440C
Cadmium Plated Except Bore

** Inch dimensions are for reference only. | * Permanently marked in non-functional area.*

Schematic Drawing

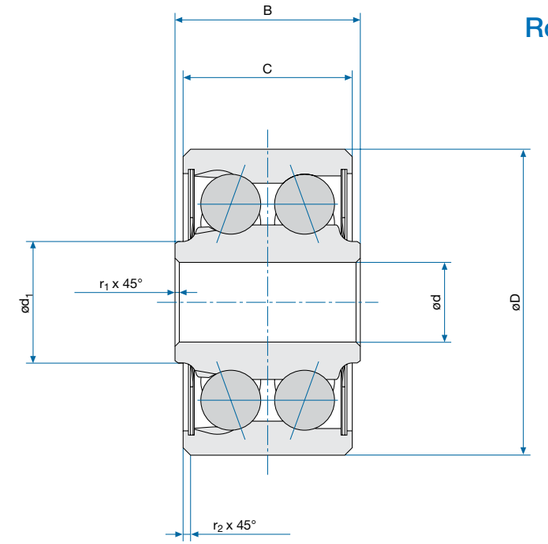

Specifications

DP...W

Diameter Code	C		Δ Cmp		d_1		r_1 x 45°		Δ $r_1$mp		r_2 x 45°	
	mm	Inch	mm	Inch	mm	Inch	mm	Inch	mm	Inch	mm	Inch
3	12.014	0.4730	-0.127	-0.0050	7.670	0.3020	0.120	0.0047	+0.380	+0.0150	0.460	0.0181
4	12.471	0.4910	-0.127	-0.0050	10.414	0.4100	0.120	0.0047	+0.380	+0.0150	0.810	0.0319
5	17.449	0.6870	-0.127	-0.0050	11.912	0.4690	0.380	0.0150	+0.380	+0.0150	0.810	0.0319
6	20.167	0.7940	-0.127	-0.0050	13.995	0.5510	0.380	0.0150	+0.380	+0.0150	0.810	0.0319
8	21.742	0.8560	-0.127	-0.0050	18.669	0.7350	0.380	0.0150	+0.380	+0.0150	1.110	0.0437
10	23.368	0.9200	-0.127	-0.0050	22.606	0.8900	0.380	0.0150	+0.381	+0.0150	1.110	0.0437

Diameter Code	Δ $r_2$mp		Radial Play		Axial Play		Static Radial Limit Load		Weight	
	mm	Inch	mm	Inch	mm	Inch	kN	lbs	g	lbs
3	+0.380	+0.0150	0.010 to 0.025	0.0004 to 0.0010	0.127	0.0050	13.1	2949	18	0.040
4	+0.380	+0.0150	0.010 to 0.025	0.0004 to 0.0010	0.152	0.0060	24.0	5391	27	0.059
5	+0.380	+0.0150	0.010 to 0.025	0.0004 to 0.0010	0.152	0.0060	48.9	10999	77	0.169
6	+0.380	+0.0150	0.010 to 0.025	0.0004 to 0.0010	0.152	0.0060	69.5	15624	118	0.260
8	+0.380	+0.0150	0.010 to 0.025	0.0004 to 0.0010	0.178	0.0070	104.0	23379	172	0.378
10	+0.381	+0.0150	0.010 to 0.025	0.0004 to 0.0010	0.178	0.0070	126.3	28397	240	0.528

Contact

USA: KAMATICS CORPORATION 1330 Blue Hills Avenue Bloomfield, CT 06002 USA | **Tel:** +1 860 243 9704 | **E-mail:** KSB@kaman.com
GERMANY: RWG GERMANY GmbH Medbacher Weg 1 D-91315 Höchstadt a. d. Aisch | **Tel:** +49 (91 93) 50105 100 | **E-mail:** RWG@kaman.com

Rolling-Element Bearings

DS / NSA8104 / NSA8114

- Self-Aligning
- Double Row
- Full Complement
- Dimensions According to AS27643

Specifications

Diameter Code	d		Δ dmp		D		Δ Dmp		B		Δ Bmp	
	mm	Inch	mm	Inch	mm	Inch	mm	Inch	mm	Inch	mm	Inch
03	4.826	0.1900	-0.012	-0.0005	19.745	0.7774	-0.012	-0.0005	12.700	0.5000	-0.120	-0.0047
04	6.350	0.2500	-0.012	-0.0005	22.895	0.9014	-0.012	-0.0005	17.449	0.6870	-0.120	-0.0047
05	7.937	0.3125	-0.012	-0.0005	31.750	1.2500	-0.012	-0.0005	20.624	0.8120	-0.120	-0.0047
06	9.525	0.3750	-0.012	-0.0005	36.512	1.4375	-0.012	-0.0005	23.798	0.9369	-0.120	-0.0047
08	12.700	0.5000	-0.012	-0.0005	42.862	1.6875	-0.012	-0.0005	25.400	1.0000	-0.120	-0.0047
10	15.875	0.6250	-0.012	-0.0005	49.212	1.9375	-0.012	-0.0005	28.575	1.1250	-0.120	-0.0047

Diameter Code	C		Δ Cmp		d_1		r_1 x 45°		Δ $r_1$mp	
	mm	Inch	mm	Inch	mm	Inch	mm	Inch	mm	Inch
03	9.956	0.3920	-0.120	-0.0047	7.721	0.3040	0.120	0.0047	+0.380	0.0150
04	11.785	0.4640	-0.120	-0.0047	10.922	0.4300	0.120	0.0047	+0.380	0.0150
05	16.662	0.6560	-0.120	-0.0047	13.081	0.5150	0.380	0.0150	+0.380	0.0150
06	19.050	0.7500	-0.120	-0.0047	14.326	0.5640	0.380	0.0150	+0.380	0.0150
08	20.624	0.8120	-0.120	-0.0047	19.685	0.7750	0.380	0.0150	+0.380	0.0150
10	23.799	0.9370	-0.120	-0.0047	22.072	0.8690	0.380	0.0150	+0.380	0.0150

Diameter Code	r_2 x 45°		Δ $r_2$mp		Radial Play / Code N		Radial Play / Code R	
	mm	Inch	mm	Inch	mm	Inch	mm	Inch
03	0.550	0.0217	+0.380	+0.0150	0.000 to 0.025	0.0000 to 0.0010	0.005 to 0.013	0.0002 to 0.0005
04	0.810	0.0319	+0.380	+0.0150	0.000 to 0.025	0.0000 to 0.0010	0.005 to 0.013	0.0002 to 0.0005
05	0.810	0.0319	+0.380	+0.0150	0.000 to 0.025	0.0000 to 0.0010	0.005 to 0.013	0.0002 to 0.0005
06	0.810	0.0319	+0.380	+0.0150	0.000 to 0.025	0.0000 to 0.0010	0.005 to 0.013	0.0002 to 0.0005
08	1.110	0.0437	+0.380	+0.0150	0.000 to 0.025	0.0000 to 0.0010	0.005 to 0.013	0.0002 to 0.0005
10	1.110	0.0437	+0.380	+0.0150	0.000 to 0.025	0.0000 to 0.0010	0.005 to 0.013	0.0002 to 0.0005

Schematic Drawing

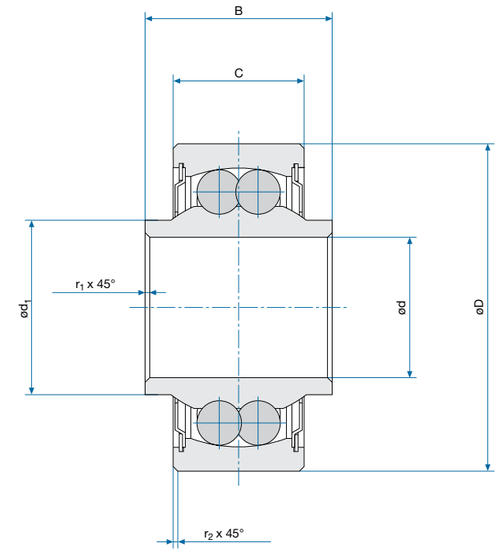

Specifications

DS / NSA8104 / NSA8114

Diameter Code	Axial Play (max.)		Static Radial Limit Load		Static Axial Limit Load		Weight	
	mm	Inch	kN	lbs	kN	lbs	g	lbs
03	0.127	0.0050	6.3	1421	0.9	200	18	0.040
04	0.152	0.0060	7.9	1780	1.3	299	27	0.059
05	0.152	0.0060	16.6	3741	2.7	600	73	0.161
06	0.152	0.0060	22.7	5101	3.6	800	109	0.240
08	0.178	0.0070	31.9	7164	4.5	1000	163	0.359
10	0.178	0.0070	40.0	8999	5.8	1299	240	0.528

Designation

NSA8114
Number of Series

03
Diameter Code

Material
EN2030 / 1.3544.9 / AISI 440C Cadmium Plated Except Bore

NSA 8104
Seals (PTFE);
Seal Retainers (CRES)

NSA 8114
Shielded (CRES)

Lubrication
NATO G 354 / MIL-PRF-23827

Technical Specification
SAE AS7949

Part Number Example
NSA8114 03

DS
Number of Series

P
Protection
P: Sealed
No Code: Shielded (CRES)

03
Diameter Code

R
Radial Play
R: Reduced
No Code: Normal

G
Grease Type
G: Grease NATO G 354 / MIL-PRF-23827
No Code: NATO G 395 / MIL-PRF-81322

1.3544.9
Material

No Code
EN2031 / 1.3505.9 / AISI E52100 Cadmium Plated Except Bore

1.3544.9
EN2030 / 1.3544.9 / AISI 440C Cadmium Plated Except Bore; Bright Passivated

Technical Specification
SAE AS7949

Part Number Example
DS P 3 R G 1.3544.9

** Inch dimensions are for reference only. | * Permanently marked in non-functional area.*

Contact

USA: KAMATICS CORPORATION 1330 Blue Hills Avenue Bloomfield, CT 06002 USA | **Tel:** +1 860 243 9704 | **E-mail:** KSB@kaman.com
GERMANY: RWG GERMANY GmbH Medbacher Weg 1 D-91315 Höchstadt a. d. Aisch | **Tel:** +49 (91 93) 50105 100 | **E-mail:** RWG@kaman.com

Rolling-Element Bearings

DW

- Extra Wide
- Double Row
- Angular Contact
- Dimensions According to AS27647

Specifications

Type	d		Δ dmp		D		Δ Dmp		B		Δ Bmp	
	mm	Inch	mm	Inch	mm	Inch	mm	Inch	mm	Inch	mm	Inch
DW4 K2	6.350	0.2500	-0.012	-0.0005	15.875	0.6250	-0.012	-0.0005	14.274	0.5620	-0.127	-0.0050
DW4 K	6.350	0.2500	-0.012	-0.0005	19.050	0.7500	-0.012	-0.0005	22.225	0.8750	-0.127	-0.0050
DW4	6.350	0.2500	-0.012	-0.0005	19.050	0.7500	-0.012	-0.0005	22.225	0.8750	-0.127	-0.0050
DW5	7.937	0.3125	-0.012	-0.0005	22.225	0.8750	-0.012	-0.0005	23.825	0.9380	-0.127	-0.0050
DW6	9.525	0.3750	-0.012	-0.0005	26.987	1.0625	-0.012	-0.0005	30.175	1.1880	-0.127	-0.0050
DW8	12.700	0.5000	-0.012	-0.0005	36.512	1.4375	-0.012	-0.0005	38.100	1.5000	-0.127	-0.0050

Designation

G
With Lubrication Grooves and Holes

DW
Number of Standard DW4K. DW4K2 are with Cage

5
Diameter Code

R
Radial Play
R: Reduced
No Code: Normal

L
Grease Type
L : NATO G 354 / MIL-PRF-23827
No Code: NATO G 395 / MIL-PRF-81322

1.3544.9
Material

Part Number Example
G DW 5 R L 1.3544.9

Bearing Materials:

No Code
EN2031 / 1.3505.9 / AISI E52100
Cadmium Plated Except Bore

Sealed Type
Seals (PTFE); Seal Retainers (CRES)

1.3544.9
EN2030 / 1.3544.9 / AISI 440C
Cadmium Plated Except Bore

Sealed Type
Seals (PTFE); Seal Retainers (CRES)

Technical Specification
SAE AS7949

** Inch dimensions are for reference only. | * Permanently marked in non-functional area.*

Schematic Drawing

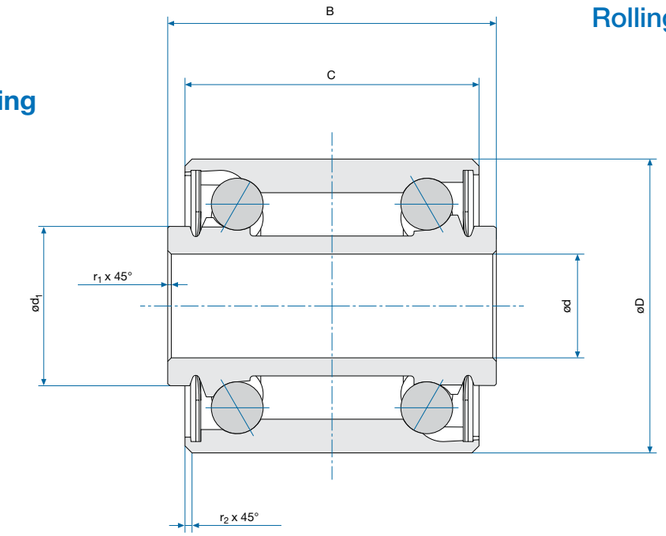

Specifications

DW

Type	C		Δ Cmp		d_1		r_1 x 45°		Δ $r_1$mp		r_2 x 45°	
	mm	Inch	mm	Inch	mm	Inch	mm	Inch	mm	Inch	mm	Inch
DW4 K2	12.700	0.5000	-0.127	-0.0050	8.585	0.3380	0.127	0.0050	+0.380	+0.0150	0.410	0.0161
DW4 K	19.050	0.7500	-0.127	-0.0050	9.448	0.3720	0.127	0.0050	+0.380	+0.0150	0.410	0.0161
DW4	19.050	0.7500	-0.127	-0.0050	9.448	0.3720	0.127	0.0050	+0.380	+0.0150	0.410	0.0161
DW5	20.650	0.8130	-0.127	-0.0050	11.836	0.4660	0.127	0.0050	+0.380	+0.0150	0.410	0.0161
DW6	27.000	1.0630	-0.127	-0.0050	14.478	0.5700	0.127	0.0050	+0.380	+0.0150	0.410	0.0161
DW8	34.925	1.3750	-0.127	-0.0050	18.008	0.7090	0.127	0.0050	+0.380	+0.0150	0.810	0.0319

Type	Δ $r_2$mp		Radial Play No Code		Radial Play Code R		Static Radial Limit Load		Weight		Contact Angle
	mm	Inch	mm	Inch	mm	Inch	kN	lbs	g	lbs	
DW4 K2	+0.380	+0.0150	0.000 to 0.025	0.0000 to 0.0010	0.005 to 0.013	0.0002 to 0.0005	6.2	1401	11	0.024	20°
DW4 K	+0.380	+0.0150	0.000 to 0.025	0.0000 to 0.0010	0.005 to 0.013	0.0002 to 0.0005	12.0	2700	18	0.040	25°
DW4	+0.380	+0.0150	0.000 to 0.025	0.0000 to 0.0010	0.005 to 0.013	0.0002 to 0.0005	16.6	3732	27	0.059	26°
DW5	+0.380	+0.0150	0.000 to 0.025	0.0000 to 0.0010	0.005 to 0.013	0.0002 to 0.0005	22.9	5139	32	0.070	25°
DW6	+0.380	+0.0150	0.000 to 0.025	0.0000 to 0.0010	0.005 to 0.013	0.0002 to 0.0005	37.5	8439	54	0.119	20°
DW8	+0.380	+0.0150	0.000 to 0.025	0.0000 to 0.0010	0.005 to 0.013	0.0002 to 0.0005	69.0	15518	132	0.290	20°

Contact

USA: KAMATICS CORPORATION 1330 Blue Hills Avenue Bloomfield, CT 06002 USA | **Tel:** +1 860 243 9704 | **E-mail:** KSB@kaman.com
GERMANY: RWG GERMANY GmbH Medbacher Weg 1 D-91315 Höchstadt a. d. Aisch | **Tel:** +49 (91 93) 50105 100 | **E-mail:** RWG@kaman.com

Rolling-Element Bearings

NSA8124

- Self-Aligning
- Full Complement
- Double Row

Specifications

Diameter Code	d		Δ dmp		D		Δ Dmp	
	mm	Inch	mm	Inch	mm	Inch	mm	Inch
03	4.826	0.1900	-0.013	-0.0005	16.000	0.6299	-0.010 to +0.002	-0.0004 to +0.0001
04	6.350	0.2500	-0.013	-0.0005	19.000	0.7480	-0.011 to +0.002	-0.0004 to +0.0001
05	7.937	0.3125	-0.013	-0.0005	24.000	0.9449	-0.011 to +0.002	-0.0004 to +0.0001
06	9.525	0.3750	-0.013	-0.0005	30.000	1.1811	-0.011 to +0.002	-0.0004 to +0.0001
08	12.700	0.5000	-0.013	-0.0005	32.000	1.2598	-0.014 to +0.003	-0.0006 to +0.0001
10	15.875	0.6250	-0.013	-0.0005	35.000	1.3780	-0.014 to +0.003	-0.0006 to +0.0001

Diameter Code	B		Δ Bmp		C		Δ Cmp		d_1	
	mm	Inch	mm	Inch	mm	Inch	mm	Inch	mm	Inch
03	12.000	0.4724	-0.100	-0.0039	8.000	0.3150	-0.100	-0.0039	7.600	0.2992
04	14.000	0.5512	-0.100	-0.0039	10.000	0.3937	-0.100	-0.0039	8.600	0.3386
05	15.000	0.5906	-0.100	-0.0039	10.000	0.3937	-0.100	-0.0039	11.100	0.4370
06	20.000	0.7874	-0.100	-0.0039	14.000	0.5512	-0.100	-0.0039	13.600	0.5354
08	20.000	0.7874	-0.100	-0.0039	14.000	0.5512	-0.100	-0.0039	15.400	0.6063
10	20.000	0.7874	-0.100	-0.0039	14.000	0.5512	-0.100	-0.0039	18.500	0.7283

Diameter Code	r		Δ rmp		Starting Torque (max.)		Swivelling Torque (max.)	
	mm	Inch	mm	Inch	Ncm	In.-lbs	Ncm	In.-lbs
03	0.500	0.0197	-0.100 to +0.300	-0.0039 to +0.0118	0.550	0.0487	0.100	0.0089
04	0.500	0.0197	-0.100 to +0.300	-0.0039 to +0.0118	0.600	0.0531	0.100	0.0089
05	0.500	0.0197	-0.100 to +0.300	-0.0039 to +0.0118	1.300	0.1151	0.100	0.0089
06	0.500	0.0197	-0.100 to +0.300	-0.0039 to +0.0118	1.600	0.1416	0.100	0.0089
08	0.500	0.0197	-0.100 to +0.300	-0.0039 to +0.0118	2.000	0.1770	0.100	0.0089
10	0.500	0.0197	-0.100 to +0.300	-0.0039 to +0.0118	2.500	0.2213	0.100	0.0089

Schematic Drawing

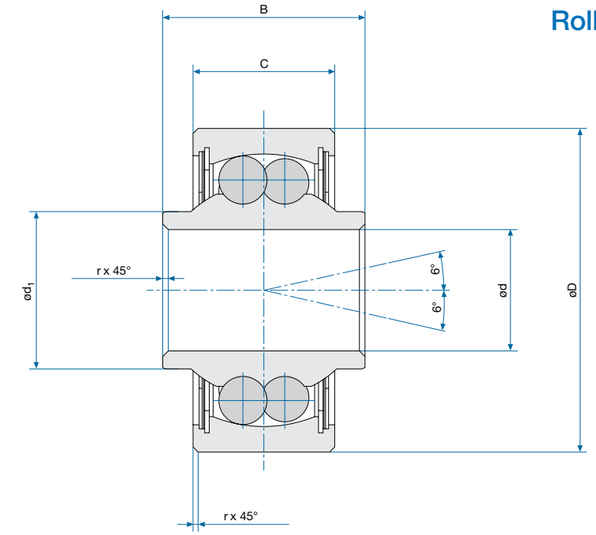

Specifications

NSA8124

Diameter Code	Radial Play		Axial Play (max.)		Static Radial Limit Load		Static Axial Limit Load		Weight	
	mm	Inch	mm	Inch	kN	lbs	kN	lbs	g	lbs
03	0.002 to 0.006	0.0001 to 0.0002	0.070	0.0028	3.9	877	1.2	270	9	0.020
04	0.002 to 0.006	0.0001 to 0.0002	0.070	0.0028	5.9	1326	1.8	405	15	0.033
05	0.002 to 0.007	0.0001 to 0.0003	0.080	0.0031	9.8	2203	3.0	674	27	0.059
06	0.002 to 0.007	0.0001 to 0.0003	0.080	0.0031	14.2	3192	4.5	1012	57	0.125
08	0.003 to 0.009	0.0001 to 0.0004	0.080	0.0031	16.7	3754	5.2	1169	62	0.136
10	0.003 to 0.009	0.0001 to 0.0004	0.080	0.0031	19.0	4271	5.9	1326	75	0.165

Designation

NSA8124
Number of Standard

04
Diameter Code

C
Material Code

Part Number Example
NSA8124 C 04

Bearing Materials:

No Code
EN2031 / AISI E52100
Cadmium Plated Except Bore

C
EN2030 / AISI 440C
Cadmium Plated Except Bore

Sealed Type

Lubrication
NATO G 354 / MIL-PRF-23827

Technical Specification
SAE AS7949

** Inch dimensions are for reference only. | * Permanently marked in non-functional area.*

Contact

USA: KAMATICS CORPORATION 1330 Blue Hills Avenue Bloomfield, CT 06002 USA | **Tel:** +1 860 243 9704 | **E-mail:** KSB@kaman.com
GERMANY: RWG GERMANY GmbH Medbacher Weg 1 D-91315 Höchstadt a. d. Aisch | **Tel:** +49 (91 93) 50105 100 | **E-mail:** RWG@kaman.com

Rolling-Element Bearings

EN3053 / EN3054 / EN3055

- Self-Aligning
- Single Row
- Full Complement
- Spherical Rollers

Specifications

Diameter Code	d		Δ dmp		D		Δ Dmp		B		Δ Bmp	
	mm	Inch	mm	Inch	mm	Inch	mm	Inch	mm	Inch	mm	Inch
06	6.000	0.2362	-0.008	-0.0003	24.000	0.9449	-0.009	-0.0004	12.000	0.4724	-0.120	-0.0047
08	8.000	0.3150	-0.008	-0.0003	26.000	1.0236	-0.009	-0.0004	15.000	0.5906	-0.120	-0.0047
08 1	8.000	0.3150	-0.008	-0.0003	30.000	1.1811	-0.011	-0.0004	15.000	0.5906	-0.120	-0.0047
10	10.000	0.3937	-0.008	-0.0003	35.000	1.3780	-0.011	-0.0004	16.000	0.6299	-0.120	-0.0047
10 1	10.000	0.3937	-0.008	-0.0003	35.000	1.3780	-0.011	-0.0004	20.000	0.7874	-0.120	-0.0047
12	12.000	0.4724	-0.008	-0.0003	40.000	1.5748	-0.011	-0.0004	20.000	0.7874	-0.120	-0.0047
15	15.000	0.5906	-0.008	-0.0003	47.000	1.8504	-0.011	-0.0004	24.000	0.9449	-0.120	-0.0047
17	17.000	0.6693	-0.008	-0.0003	47.000	1.8504	-0.011	-0.0004	24.000	0.9449	-0.120	-0.0047

Diameter Code	C		Δ Cmp		d_1		r		Δ rmp	
	mm	Inch	mm	Inch	mm	Inch	mm	Inch	mm	Inch
06	8.000	0.3150	-0.120	-0.0047	11.900	0.4685	0.500	0.0197	-0.200 to +0.300	-0.0079 to +0.0118
08	10.000	0.3937	-0.120	-0.0047	12.300	0.4843	0.500	0.0197	-0.200 to +0.300	-0.0079 to +0.0118
08 1	10.000	0.3937	-0.120	-0.0047	14.300	0.5630	0.500	0.0197	-0.200 to +0.300	-0.0079 to +0.0118
10	12.000	0.4724	-0.120	-0.0047	16.900	0.6654	0.500	0.0197	-0.200 to +0.300	-0.0079 to +0.0118
10 1	12.000	0.4724	-0.120	-0.0047	16.900	0.6654	0.500	0.0197	-0.200 to +0.300	-0.0079 to +0.0118
12	13.000	0.5118	-0.120	-0.0047	19.900	0.7835	0.500	0.0197	-0.200 to +0.300	-0.0079 to +0.0118
15	14.000	0.5512	-0.120	-0.0047	23.900	0.9409	0.500	0.0197	-0.200 to +0.300	-0.0079 to +0.0118
17	15.000	0.5906	-0.120	-0.0047	25.900	1.0197	0.500	0.0197	-0.200 to +0.300	-0.0079 to +0.0118

Schematic Drawing

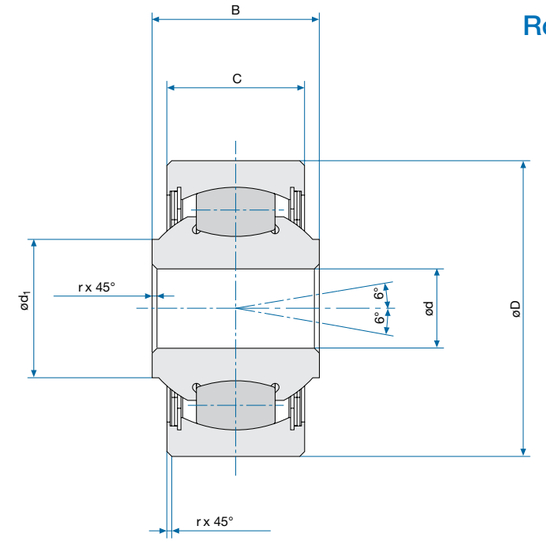

Specifications

EN3053 / EN3054 / EN3055

Diameter Code	Starting Torque (max.)		Radial Play		Static Radial Limit Load		Weight	
	Ncm	In.-lbs	mm	Inch	kN	lbs	g	lbs
06	0.600	0.0531	0.002 to 0.006	0.0001 to 0.0002	15.9	3574	21	0.046
08	0.800	0.0708	0.002 to 0.007	0.0001 to 0.0003	22.8	5125	37	0.081
08 1	1.200	0.1062	0.002 to 0.007	0.0001 to 0.0003	27.8	6249	49	0.108
10	1.600	0.1416	0.002 to 0.007	0.0001 to 0.0003	32.9	7396	70	0.154
10 1	1.600	0.1416	0.002 to 0.007	0.0001 to 0.0003	32.9	7396	72	0.158
12	2.000	0.1770	0.003 to 0.009	0.0001 to 0.0004	45.0	10116	108	0.238
15	2.500	0.2213	0.003 to 0.009	0.0001 to 0.0004	54.2	12184	153	0.337
17	3.000	0.2655	0.003 to 0.009	0.0001 to 0.0004	69.4	15601	163	0.359

Designation

EN3053
Number of Standard

A
Grease Type
A: NATO G 354 / MIL-PRF-23827
B: NATO G 395 / MIL-PRF-81322

Part Number Example
EN3053 A 12 P 1

12
Diameter Code

P
Protection
Shielded (CRES)

1
Dimensional Variation Code

Bearing Materials:

EN3053 Series
EN2031 / 1.3505.9 / AISI E52100

EN3054 Series
EN2031 / 1.3505.9 / AISI E52100
Cadmium Plated Except Bore

EN3055 Series
EN2030 / 1.3544.9 / AISI 440C

Technical Specification
EN3280

** Inch dimensions are for reference only. | * Permanently marked in non-functional area.*

Contact

USA: KAMATICS CORPORATION 1330 Blue Hills Avenue Bloomfield, CT 06002 USA | **Tel:** +1 860 243 9704 | **E-mail:** KSB@kaman.com
GERMANY: RWG GERMANY GmbH Medbacher Weg 1 D-91315 Höchstadt a. d. Aisch | **Tel:** +49 (91 93) 50105 100 | **E-mail:** RWG@kaman.com

Rolling-Element Bearings

EN3290 / EN3291 / EN3292

- Self-Aligning
- Single Row
- Full Complement
- Spherical Rollers

Specifications

Diameter Code	d		Δ dmp		D		Δ Dmp		B		Δ Bmp	
	mm	Inch	mm	Inch	mm	Inch	mm	Inch	mm	Inch	mm	Inch
08	8.000	0.3150	-0.008	-0.0003	30.000	1.1811	-0.009	-0.0004	17.000	0.6693	-0.120	-0.0047
10	10.000	0.3937	-0.008	-0.0003	35.000	1.3780	-0.011	-0.0004	21.000	0.8268	-0.120	-0.0047
12	12.000	0.4724	-0.008	-0.0003	37.000	1.4567	-0.011	-0.0004	21.000	0.8268	-0.120	-0.0047
15	15.000	0.5906	-0.008	-0.0003	42.000	1.6535	-0.011	-0.0004	21.000	0.8268	-0.120	-0.0047
17	17.000	0.6693	-0.008	-0.0003	47.000	1.8504	-0.011	-0.0004	23.000	0.9055	-0.120	-0.0047
20	20.000	0.7874	-0.010	-0.0004	52.000	2.0472	-0.013	-0.0005	26.000	1.0236	-0.120	-0.0047
25	25.000	0.9843	-0.010	-0.0004	62.000	2.4409	-0.013	-0.0005	29.000	1.1417	-0.120	-0.0047
30	30.000	1.1811	-0.010	-0.0004	72.000	2.8346	-0.013	-0.0005	34.000	1.3386	-0.120	-0.0047

Diameter Code	C		Δ Cmp		d_1		r		Δ rmp	
	mm	Inch	mm	Inch	mm	Inch	mm	Inch	mm	Inch
08	14.000	0.5512	-0.120	-0.0047	14.000	0.5512	0.500	0.0197	-0.200 to +0.300	-0.0079 to +0.0118
10	17.000	0.6693	-0.120	-0.0047	15.700	0.6181	0.500	0.0197	-0.200 to +0.300	-0.0079 to +0.0118
12	17.000	0.6693	-0.120	-0.0047	18.000	0.7087	0.500	0.0197	-0.200 to +0.300	-0.0079 to +0.0118
15	17.000	0.6693	-0.120	-0.0047	21.800	0.8583	0.500	0.0197	-0.200 to +0.300	-0.0079 to +0.0118
17	19.000	0.7480	-0.120	-0.0047	25.100	0.9882	0.500	0.0197	-0.200 to +0.300	-0.0079 to +0.0118
20	21.000	0.8268	-0.120	-0.0047	28.000	1.1024	0.500	0.0197	-0.200 to +0.500	-0.0079 to +0.0197
25	24.000	0.9449	-0.120	-0.0047	34.500	1.3583	0.500	0.0197	-0.200 to +0.500	-0.0079 to +0.0197
30	27.000	1.0630	-0.120	-0.0047	41.300	1.6260	0.500	0.0197	-0.200 to +0.500	-0.0079 to +0.0197

Diameter Code	Starting Torque				Radial Play Code R		Radial Play Code K	
	Code E		Code P					
	Ncm	In.-lbs	Ncm	In.-lbs	mm	Inch	mm	Inch
08	1.100	0.0974	0.700	0.0620	0.002 to 0.007	0.0001 to 0.0003	0.010 to 0.020	0.0004 to 0.0008
10	1.550	0.1372	1.000	0.0885	0.002 to 0.007	0.0001 to 0.0003	0.010 to 0.020	0.0004 to 0.0008
12	2.300	0.2036	1.500	0.1328	0.003 to 0.009	0.0001 to 0.0004	0.010 to 0.020	0.0004 to 0.0008
15	3.000	0.2655	2.000	0.1770	0.003 to 0.009	0.0001 to 0.0004	0.010 to 0.020	0.0004 to 0.0008
17	3.800	0.3363	2.500	0.2213	0.003 to 0.009	0.0001 to 0.0004	0.010 to 0.020	0.0004 to 0.0008
20	4.500	0.3983	3.000	0.2655	0.003 to 0.010	0.0001 to 0.0004	0.010 to 0.020	0.0004 to 0.0008
25	5.200	0.4602	3.500	0.3098	0.003 to 0.010	0.0001 to 0.0004	0.015 to 0.025	0.0006 to 0.0010
30	6.000	0.5310	4.000	0.3540	0.003 to 0.010	0.0001 to 0.0004	0.015 to 0.025	0.0006 to 0.0010

Schematic Drawing

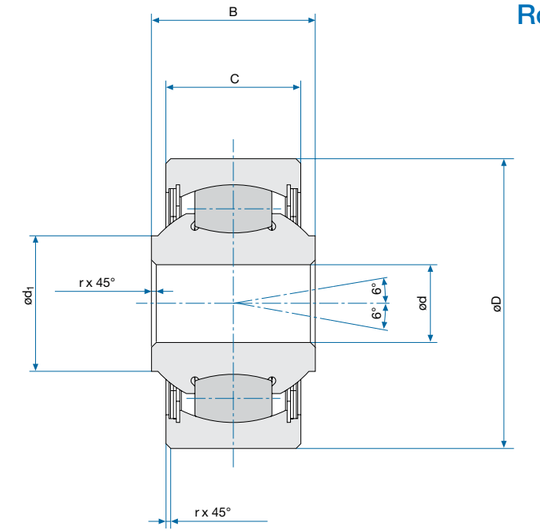

Specifications

EN3290 / EN3291 / EN3292

Diameter Code	Axial Play Code R / (max.)		Axial Play Code K / (max.)		Static Axial Limit Load		Static Radial Limit Load		Weight	
	mm	Inch	mm	Inch	kN	lbs	mm	Inch	g	lbs
08	0.190	0.0075	0.230	0.0091	11.1	2495	36.7	8250	58	0.128
10	0.190	0.0075	0.230	0.0091	16.3	3664	53.9	12117	91	0.200
12	0.200	0.0079	0.240	0.0094	18.2	4091	60.2	13533	106	0.233
15	0.200	0.0079	0.240	0.0094	21.1	4743	69.6	15646	132	0.290
17	0.200	0.0079	0.240	0.0094	28.6	6429	94.5	21244	186	0.409
20	0.220	0.0087	0.250	0.0098	34.3	7711	113.2	25447	246	0.541
25	0.240	0.0094	0.290	0.0114	49.0	11015	161.7	36350	397	0.873
30	0.240	0.0094	0.290	0.0114	65.3	14679	215.6	48467	610	1.342

Designation

EN3290
Number of Standard

A
Grease Type
A: NATO G 354 / MIL-PRF-23827
B: NATO G 395 / MIL-PRF-81322

K
Radial / Axial Play
K: Normal
R: Reduced

20
Diameter Code

E
Protection
E: Sealed
P: Shielded (CRES)

Part Number Example
EN3290 A K 20 E

Bearing Materials:

EN3290 Series
EN2031 / 1.3505.9 / AISI E52100

EN3291 Series
EN2031 / 1.3505.9 / AISI E52100
Cadmium Plated Except Bore

EN3292 Series
EN2030 / 1.3544.9 / AISI 440C

Technical Specification
EN3280 / EN2063

** Inch dimensions are for reference only. | * Permanently marked in non-functional area.*

Contact

USA: KAMATICS CORPORATION 1330 Blue Hills Avenue Bloomfield, CT 06002 USA | **Tel:** +1 860 243 9704 | **E-mail:** KSB@kaman.com
GERMANY: RWG GERMANY GmbH Medbacher Weg 1 D-91315 Höchstadt a. d. Aisch | **Tel:** +49 (91 93) 50105 100 | **E-mail:** RWG@kaman.com

Rolling-Element Bearings

DSR / NSA8110

- Self-Aligning
- Single Row
- Spherical Rollers

Specifications

Diameter Code	d		Δ dmp		D		Δ Dmp		B		Δ Bmp	
	mm	Inch	mm	Inch	mm	Inch	mm	Inch	mm	Inch	mm	Inch
04	6.350	0.2500	-0.012	-0.0005	22.895	0.9014	-0.012	-0.0005	15.875	0.6250	-0.120	-0.0047
05	7.937	0.3125	-0.012	-0.0005	31.750	1.2500	-0.012	-0.0005	20.624	0.8120	-0.120	-0.0047
06	9.525	0.3750	-0.012	-0.0005	36.512	1.4375	-0.012	-0.0005	23.799	0.9370	-0.120	-0.0047
08	12.700	0.5000	-0.012	-0.0005	42.862	1.6875	-0.012	-0.0005	25.400	1.0000	-0.120	-0.0047
10	15.875	0.6250	-0.012	-0.0005	49.212	1.9375	-0.012	-0.0005	28.575	1.1250	-0.120	-0.0047
12	19.050	0.7500	-0.012	-0.0005	60.325	2.3750	-0.012	-0.0005	33.324	1.3120	-0.120	-0.0047

Designation

DSR
Number of Standard

P
Protection
P: Sealed
No Code: Shielded (CRES)

4
Diameter Code

G
Grease Type
G: Grease NATO G 354 / MIL-PRF-23827
No Code: NATO G 395 / MIL-PRF-81322

1.3544.9
Material

No Code
EN2031 / 1.3505.9 / AISI E52100
Cadmium Plated Except Bore

1.3544.9
EN2030 / 1.3544.9 / AISI 440 C
Cadmium Plated Except Bore

Technical Specification
SAE AS7949

Part Number Example
DSR P 4 G 1.3544.9

NSA8110
Number of Standard

04
Diameter Code

Material
EN2030 / 1.3544.9 / AISI 440C
Cadmium Plated Except Bore

Sealed Type
Seals (PTFE);
Seal Retainers (CRES)

Lubrication
NATO G 354 / MIL-PRF-23827

Technical Specification
SAE AS7949

Part Number Example
NSA8110 04

** Inch dimensions are for reference only. | * Permanently marked in non-functional area.*

Schematic Drawing

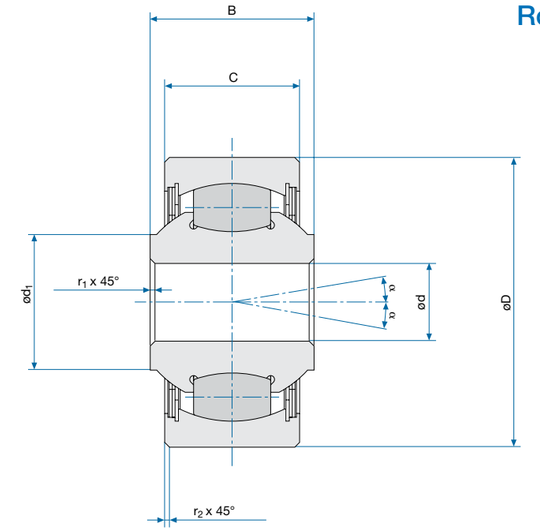

Specifications

DSR / NSA8110

Diameter Code	C		Δ Cmp		d_1		r_1 x 45°		r_2 x 45°	
							+0.380	+0.0150	+0.380	+0.0150
	mm	Inch	mm	Inch	mm	Inch	mm	Inch	mm	Inch
04	11.785	0.4640	-0.120	-0.0047	10.261	0.4040	0.120	0.0047	0.810	0.0319
05	16.662	0.6560	-0.120	-0.0047	13.081	0.5150	0.380	0.0150	0.810	0.0319
06	19.050	0.7500	-0.120	-0.0047	14.325	0.5640	0.380	0.0150	0.810	0.0319
08	20.624	0.8120	-0.120	-0.0047	19.685	0.7750	0.380	0.0150	1.110	0.0437
10	23.799	0.9370	-0.120	-0.0047	22.072	0.8690	0.380	0.0150	1.110	0.0437
12	28.575	1.1250	-0.120	-0.0047	29.210	1.1500	0.380	0.0150	1.110	0.0437

Diameter Code	Starting Torque Max. Sealed		Radial Play (max.)		Static Radial Limit Load		Weight		α
	Ncm	In.-lbs	mm	Inch	kN	lbs	g	lbs	
04	1.000	0.0885	0.025	0.0010	13.4	3012	27	0.059	10°
05	1.100	0.0974	0.025	0.0010	32.5	7306	73	0.161	10°
06	1.500	0.1328	0.025	0.0010	42.5	9554	109	0.240	10°
08	3.000	0.2655	0.025	0.0010	56.0	12589	163	0.359	10°
10	4.500	0.3983	0.025	0.0010	78.0	17534	250	0.550	10°
12	5.200	0.4602	0.025	0.0010	120.0	26976	476	1.047	10°

Contact

USA: KAMATICS CORPORATION 1330 Blue Hills Avenue Bloomfield, CT 06002 USA | **Tel:** +1 860 243 9704 | **E-mail:** KSB@kaman.com
GERMANY: RWG GERMANY GmbH Medbacher Weg 1 D-91315 Höchstadt a. d. Aisch | **Tel:** +49 (91 93) 50105 100 | **E-mail:** RWG@kaman.com

Spherical Bearings

PRODUCT OVERVIEW

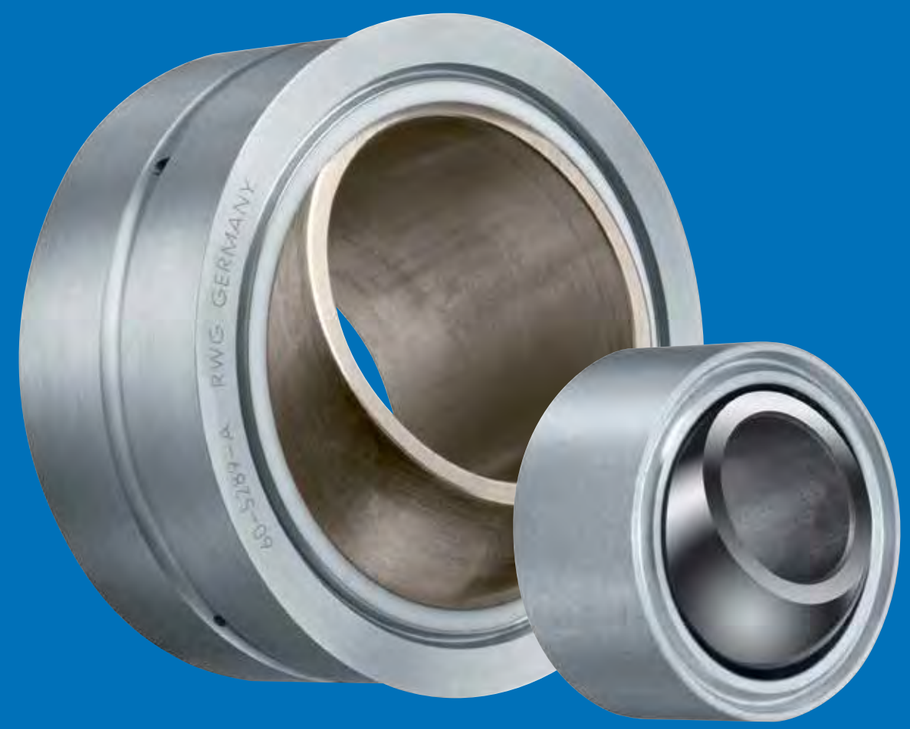

KAMATICS·RWG

Spherical Bearings

PRODUCT OVERVIEW

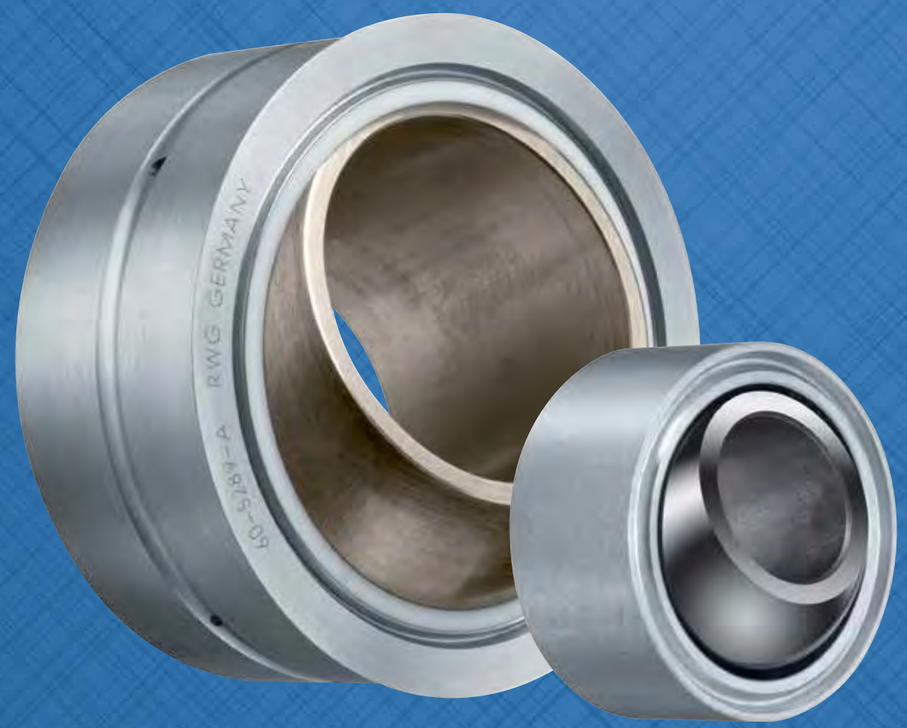

Table of Contents

PRODUCT	PAGE
Fraslip Fabric Liner	
EN4613 R	90-91
EN4613 S	92-93
EN4614 R	94-95
EN4614 S	96-97
FMGB... .4	98-99
FMGN... .4	100-101
FMGS... .4	102-103
FMGU... .4	104-105
EN2584 / FRE	106-107
EN2585 / FLR	108-109
EN3048	110-111
EN4037	112-113
EN4038	114-115
EN4039	116-117
FRA	118-119
Swaged Metal to Metal	
EN2335	120-123
EN4265 / EN4266	124-127
EN6046	128-129
EN6097	130-131
FMGB... .3	132-133
FMGN... .1	134-137
FMGS...	138-141
FMGV... .3	142-143

PRODUCT	PAGE
Loader Slot Metal to Metal	
EN2336	144-147
EN2588	148-151
GE...D	152-155
GE...DN	156-159
GL / GLD	160-163
KAron Molded Liner	
KR-CN / AS14104	164-165
KR-CNG / AS14101	166-167
KR-CW / AS14102	168-169
KR-CWG / AS14103	170-171
KR-CN/4 / AS81820/4	172-173
KR-CNG/1 / AS81820/1	174-175
KR-CW/2 / AS81820/2	176-177
KR-CWG/3 / AS81820/3	178-179
KR-CE (Extended Inner Race / High Misalignment)	180-181
KR-CEG (Extended Inner Race / High Misalignment with Groove)	182-183
KR-C Miniature	184-185

Spherical Bearings

EN4613 R

- Self-Lubricating
- CRES
- With Mounting Grooves

Specifications

Diameter Code	d		Δ dmp		D		Δ Dmp		B		C	
									–0.050	–0.0020	±0.130	±0.0050
	mm	Inch	mm	Inch	mm	Inch	mm	Inch	mm	Inch	mm	Inch
03	4.826	0.1900	-0.013	-0.0005	14.287	0.5625	-0.008	-0.0003	7.140	0.2811	5.540	0.2181
04	6.350	0.2500	-0.013	-0.0005	16.667	0.6562	-0.008	-0.0003	8.710	0.3429	6.350	0.2500
05	7.937	0.3125	-0.013	-0.0005	19.050	0.7500	-0.008	-0.0003	9.530	0.3752	7.140	0.2811
06	9.525	0.3750	-0.013	-0.0005	20.637	0.8125	-0.009	-0.0004	10.310	0.4059	7.930	0.3122
07	11.113	0.4375	-0.013	-0.0005	23.017	0.9062	-0.009	-0.0004	11.100	0.4370	8.710	0.3429
08	12.700	0.5000	-0.013	-0.0005	25.400	1.0000	-0.009	-0.0004	12.700	0.5000	9.910	0.3902
09	14.288	0.5625	-0.013	-0.0005	27.780	1.0937	-0.009	-0.0004	14.280	0.5622	11.100	0.4370
10	15.875	0.6250	-0.013	-0.0005	30.163	1.1875	-0.009	-0.0004	15.880	0.6252	12.700	0.5000
12	19.050	0.7500	-0.013	-0.0005	36.513	1.4375	-0.011	-0.0004	19.050	0.7500	15.060	0.5929
14	22.225	0.8750	-0.013	-0.0005	39.688	1.5625	-0.011	-0.0004	22.230	0.8752	17.860	0.7031
16	25.400	1.0000	-0.013	-0.0005	44.450	1.7500	-0.013	-0.0005	25.400	1.0000	20.240	0.7969
20	31.750	1.2500	-0.013	-0.0005	50.800	2.0000	-0.013	-0.0005	27.760	1.0929	23.930	0.9421
24	38.100	1.5000	-0.013	-0.0005	61.912	2.4375	-0.013	-0.0005	33.330	1.3122	28.700	1.1299
28	44.450	1.7500	-0.013	-0.0005	71.437	2.8125	-0.013	-0.0005	38.890	1.5311	33.450	1.3169
32	50.800	2.0000	-0.013	-0.0005	80.962	3.1875	-0.013	-0.0005	44.450	1.7500	38.230	1.5051

Diameter Code	d_1 (min.)		d_2		P		r_2		α (min.)	ß
			-0.200	-0.0080	-0.254	-0.01				
	mm	Inch	mm	Inch	mm	Inch	mm	Inch		
03	7.440	0.2929	12.700	0.5000	0.635	0.0250	0.127 to 0.254	0.0050 to 0.0100	10°	20°
04	9.250	0.3642	15.090	0.5941	0.635	0.0250	0.127 to 0.254	0.0050 to 0.0100	10°	20°
05	10.640	0.4189	16.510	0.6500	0.889	0.0350	0.127 to 0.254	0.0050 to 0.0100	10°	30°
06	12.060	0.4748	18.080	0.7118	0.889	0.0350	0.254 to 0.432	0.0100 to 0.0170	9°	30°
07	13.460	0.5299	20.470	0.8059	0.889	0.0350	0.254 to 0.432	0.0100 to 0.0170	8°	30°
08	15.240	0.6000	22.250	0.8760	1.397	0.0550	0.254 to 0.432	0.0100 to 0.0170	8°	30°
09	17.020	0.6701	24.640	0.9701	1.397	0.0550	0.254 to 0.432	0.0100 to 0.0170	8°	30°
10	18.770	0.7390	27.000	1.0630	1.397	0.0550	0.254 to 0.432	0.0100 to 0.0170	8°	30°
12	23.370	0.9201	33.350	1.3130	1.397	0.0550	0.254 to 0.432	0.0100 to 0.0170	8°	30°
14	24.890	0.9799	36.520	1.4378	1.397	0.0550	0.254 to 0.432	0.0100 to 0.0170	8°	30°
16	28.400	1.1181	41.300	1.6260	1.397	0.0550	0.254 to 0.432	0.0100 to 0.0170	9°	30°
20	36.420	1.4339	47.650	1.8760	1.397	0.0550	0.254 to 0.432	0.0100 to 0.0170	5.5°	30°
24	46.430	1.8280	58.750	2.3130	1.397	0.0550	0.254 to 0.432	0.0100 to 0.0170	5°	30°
28	50.710	1.9965	68.270	2.6878	1.397	0.0550	0.254 to 0.432	0.0100 to 0.0170	5.5°	30°
32	61.980	2.4402	77.830	3.0642	1.397	0.0550	0.254 to 0.432	0.0100 to 0.0170	5°	30°

Schematic Drawing

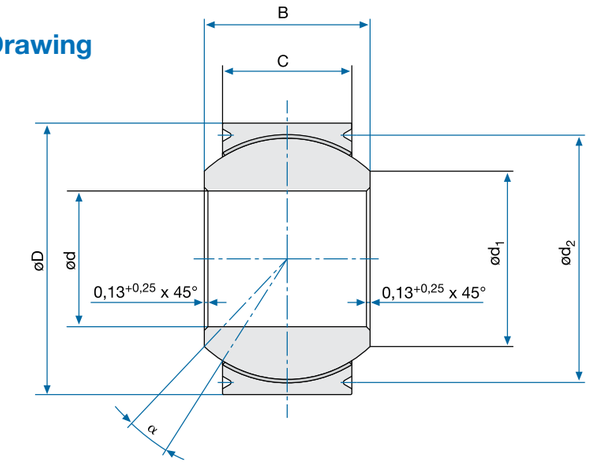

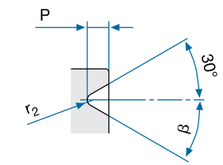

(TYP)

Specifications

EN4613 R

Diameter Code	Starting Torque Normal / Code N		Starting Torque Reduced /Code X		Static Radial Limit Load		Static Axial Limit Load		Radial Dynamic Load		Weight	
	Nm	In.-lbs	Nm	In.-lbs	kN	lbs	kN	lbs	kN	lbs	g	lbs
3	0.06 to 0.34	0.53 to 3.0	0 to 0.11	0 to 1.0	16.7	3754.2	2.4	539.5	10.3	2315.4	7	0.015
4	0.11 to 0.56	1.0 to 5.0	0 to 0.11	0 to 1.0	30.6	6878.9	3.4	764.3	15.0	3372.0	10	0.022
5	0.11 to 0.56	1.0 to 5.0	0 to 0.11	0 to 1.0	39.5	8879.6	4.4	989.1	19.3	4338.6	14	0.031
6	0.11 to 0.56	1.0 to 5.0	0 to 0.11	0 to 1.0	49.5	11127.6	5.7	1281.4	24.2	5440.2	18	0.040
7	0.11 to 0.56	1.0 to 5.0	0.03 to 0.15	.27 to 1.33	60.5	13600.4	7.0	1573.6	29.6	6654.1	23	0.051
8	0.11 to 0.56	1.0 to 5.0	0.03 to 0.15	.27 to 1.33	79.5	17871.6	9.4	2113.1	38.9	8744.7	32	0.070
9	0.11 to 0.56	1.0 to 5.0	0.03 to 0.15	.27 to 1.33	90.6	20366.9	14.5	3259.6	44.3	9958.6	41	0.090
10	0.11 to 0.56	1.0 to 5.0	0.03 to 0.15	.27 to 1.33	117.9	26503.9	20.1	4518.5	57.7	12971.0	54	0.119
12	0.11 to 0.56	1.0 to 5.0	0.03 to 0.15	.27 to 1.33	173.4	38980.3	28.9	6496.7	84.8	19063.0	95	0.209
14	0.23 to 0.90	2.0 to 8.0	0.04 to 0.25	.35 to 2.21	233.9	52580.7	42.9	9643.9	114.4	25717.1	123	0.271
16	0.23 to 0.90	2.0 to 8.0	0.04 to 0.25	.35 to 2.21	307.9	69215.9	57.0	12813.6	150.5	33832.4	173	0.381
20	0.23 to 1.50	2.0 to 13.3	0.05 to 0.32	.44 to 2.83	446.1	100283.3	82.8	18613.4	218.1	49028.9	240	0.528
24	0.23 to 1.50	2.0 to 13.3	0.05 to 0.32	.44 to 2.83	679.5	152751.6	123.4	27740.3	332.2	74678.6	440	0.968
28	0.23 to 1.50	2.0 to 13.3	0.05 to 0.32	.44 to 2.83	896.4	201510.7	171.7	38598.2	438.2	98507.4	663	1.459
32	0.23 to 1.50	2.0 to 13.3	0.05 to 0.32	.44 to 2.83	1233.9	277380.7	228.4	51344.3	603.2	135599.4	980	2.156

Designation

EN4613
Number of Standard

R
Type of Mounting
R: With Mounting Grooves

03
Diameter Code

N
Starting Torque / Low Breakaway Torque Option
N: Normal
X: Reduced

T
Surface Treatment
T: Passivated
P: Outer Ring Cadmium Plated

A
Bonded Liner Technology

Part Number Example
EN4613 R 03 N T A

Bearing Materials:

Liner
per EN2755 / SAE AS81820

Outer Ring
EN3161 / 1.4548 / 17-4 PH H1150

Inner Ring
EN2030 / 1.3544.9 / AISI 440C

Technical Specification
EN2755

** Inch dimensions are for reference only. | * Permanently marked in non-functional area.*

Contact

USA: KAMATICS CORPORATION 1330 Blue Hills Avenue Bloomfield, CT 06002 USA | **Tel:** +1 860 243 9704 | **E-mail:** KSB@kaman.com
GERMANY: RWG GERMANY GmbH Medbacher Weg 1 D-91315 Höchstadt a. d. Aisch | **Tel:** +49 (91 93) 50105 100 | **E-mail:** RWG@kaman.com

Spherical Bearings

EN4613 S

- Self-Lubricating
- CRES
- Chamfered Outer Race
- Without Mounting Grooves

Specifications

Diameter Code	d		Δ dmp		D		Δ Dmp		B		C	
									-0.05	-0.002	±0.13	±0.005
	mm	Inch	mm	Inch	mm	Inch	mm	Inch	mm	Inch	mm	Inch
03	4.826	0.1900	-0.013	-0.0005	14.287	0.5625	-0.008	-0.0003	7.140	0.2811	5.540	0.2181
04	6.350	0.2500	-0.013	-0.0005	16.667	0.6562	-0.008	-0.0003	8.710	0.3429	6.350	0.2500
05	7.937	0.3125	-0.013	-0.0005	19.050	0.7500	-0.008	-0.0003	9.530	0.3752	7.140	0.2811
06	9.525	0.3750	-0.013	-0.0005	20.637	0.8125	-0.009	-0.0004	10.310	0.4059	7.930	0.3122
07	11.113	0.4375	-0.013	-0.0005	23.017	0.9062	-0.009	-0.0004	11.100	0.4370	8.710	0.3429
08	12.700	0.5000	-0.013	-0.0005	25.400	1.0000	-0.009	-0.0004	12.700	0.5000	9.910	0.3902
09	14.288	0.5625	-0.013	-0.0005	27.780	1.0937	-0.009	-0.0004	14.280	0.5622	11.100	0.4370
10	15.875	0.6250	-0.013	-0.0005	30.163	1.1875	-0.009	-0.0004	15.880	0.6252	12.700	0.5000
12	19.050	0.7500	-0.013	-0.0005	36.513	1.4375	-0.011	-0.0004	19.050	0.7500	15.060	0.5929
14	22.225	0.8750	-0.013	-0.0005	39.688	1.5625	-0.011	-0.0004	22.230	0.8752	17.860	0.7031
16	25.400	1.0000	-0.013	-0.0005	44.450	1.7500	-0.013	-0.0005	25.400	1.0000	20.240	0.7969
20	31.750	1.2500	-0.013	-0.0005	50.800	2.0000	-0.013	-0.0005	27.760	1.0929	23.930	0.9421
24	38.100	1.5000	-0.013	-0.0005	61.912	2.4375	-0.013	-0.0005	33.330	1.3122	28.700	1.1299
28	44.450	1.7500	-0.013	-0.0005	71.437	2.8125	-0.013	-0.0005	38.890	1.5311	33.450	1.3169
32	50.800	2.0000	-0.013	-0.0005	80.962	3.1875	-0.013	-0.0005	44.450	1.7500	38.230	1.5051

Diameter Code	d_1 (min.)		r_1		Starting Torque Normal / Code N		Starting Torque Reduced /Code X	
	mm	Inch	mm	Inch	Nm	In.-lbs	Nm	In.-lbs
03	7.440	0.2929	0.254 to 0.508	0.0100 to 0.0200	0.06 to 0.34	0.53 to 3.0	0 to 0.11	0 to 1.0
04	9.250	0.3642	0.254 to 0.508	0.0100 to 0.0200	0.11 to 0.56	1.0 to 5.0	0 to 0.11	0 to 1.0
05	10.640	0.4189	0.254 to 0.508	0.0100 to 0.0200	0.11 to 0.56	1.0 to 5.0	0 to 0.11	0 to 1.0
06	12.060	0.4748	0.508 to 0.762	0.0200 to 0.0300	0.11 to 0.56	1.0 to 5.0	0 to 0.11	0 to 1.0
07	13.460	0.5299	0.508 to 0.762	0.0200 to 0.0300	0.11 to 0.56	1.0 to 5.0	0.03 to 0.15	.27 to 1.33
08	15.240	0.6000	0.508 to 0.762	0.0200 to 0.0300	0.11 to 0.56	1.0 to 5.0	0.03 to 0.15	.27 to 1.33
09	17.020	0.6701	0.508 to 0.762	0.0200 to 0.0300	0.11 to 0.56	1.0 to 5.0	0.03 to 0.15	.27 to 1.33
10	18.770	0.7390	0.508 to 0.762	0.0200 to 0.0300	0.11 to 0.56	1.0 to 5.0	0.03 to 0.15	.27 to 1.33
12	23.370	0.9201	0.762 to 1.016	0.0300 to 0.0400	0.11 to 0.56	1.0 to 5.0	0.03 to 0.15	.27 to 1.33
14	24.890	0.9799	0.762 to 1.016	0.0300 to 0.0400	0.23 to 0.90	2.0 to 8.1	0.04 to 0.25	.35 to 2.21
16	28.400	1.1181	0.762 to 1.016	0.0300 to 0.0400	0.23 to 0.90	2.0 to 8.0	0.04 to 0.25	.35 to 2.21
20	36.420	1.4339	0.762 to 1.016	0.0300 to 0.0400	0.23 to 1.50	2.0 to 13.3	0.05 to 0.32	.44 to 2.83
24	46.430	1.8280	0.762 to 1.016	0.0300 to 0.0400	0.23 to 1.50	2.0 to 13.3	0.05 to 0.32	.44 to 2.83
28	50.710	1.9965	0.762 to 1.016	0.0300 to 0.0400	0.23 to 1.50	2.0 to 13.3	0.05 to 0.32	.44 to 2.83
32	61.980	2.4402	0.762 to 1.016	0.0300 to 0.0400	0.23 to 1.50	2.0 to 13.3	0.05 to 0.32	.44 to 2.83

Schematic Drawing

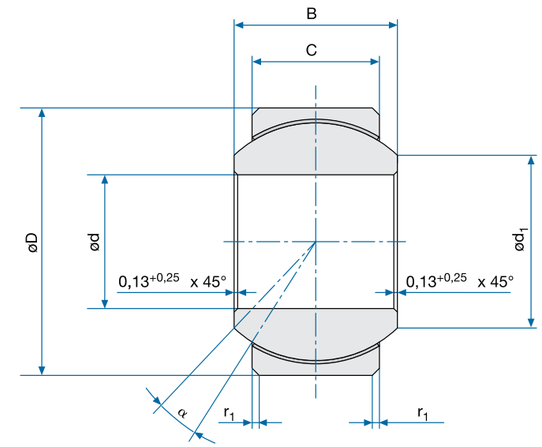

Specifications

EN4613 S

Diameter Code	α (min.)	Static Radial Limit Load		Static Axial Limit Load		Radial Dynamic Load		Weight	
		kN	lbs	kN	lbs	kN	lbs	g	lbs
03	10°	16.7	3754.2	2.4	539.5	10.3	2315.4	7	0.015
04	10°	30.6	6878.9	3.4	764.3	15	3372.0	10	0.022
05	10°	39.5	8879.6	4.4	989.1	19.3	4338.6	14	0.031
06	9°	49.5	11127.6	5.7	1281.4	24.2	5440.2	18	0.040
07	8°	60.5	13600.4	7.0	1573.6	29.6	6654.1	23	0.051
08	8°	79.5	17871.6	9.4	2113.1	38.9	8744.7	32	0.070
09	8°	90.6	20366.9	14.5	3259.6	44.3	9958.6	41	0.090
10	8°	117.9	26503.9	20.1	4518.5	57.7	12971.0	54	0.119
12	8°	173.4	38980.3	28.9	6496.7	84.8	19063.0	95	0.209
14	8°	233.9	52580.7	42.9	9643.9	114.4	25717.1	123	0.271
16	9°	307.9	69215.9	57.0	12813.6	150.5	33832.4	173	0.381
20	5.5°	446.1	100283.3	82.8	18613.4	218.1	49028.9	240	0.528
24	5°	679.5	152751.6	123.4	27740.3	332.2	74678.6	440	0.968
28	5.5°	896.4	201510.7	171.7	38598.2	438.2	98507.4	663	1.459
32	5°	1233.9	277380.7	228.4	51344.3	603.2	135599.4	980	2.156

Designation

EN4613
Number of Standard

S
Type of Mounting
S: Without Mounting Grooves

03
Diameter Code

N
Starting Torque
N: Normal
X: Reduced

T
Surface Treatment
T: Passivated
P: Outer Ring Cadmium Plated

A
Bonded Liner Technology

Part Number Example
EN4613 S 03 N T A

Bearing Materials:

Liner
EN2755 / SAE AS81820

Outer Ring
EN3161 / 1.4548 / 17-4 PH H1150

Inner Ring
EN2030 / 1.3544.9 / AISI 440C

Technical Specification
EN2755

** Inch dimensions are for reference only. | * Permanently marked in non-functional area.*

Contact

USA: KAMATICS CORPORATION 1330 Blue Hills Avenue Bloomfield, CT 06002 USA | **Tel:** +1 860 243 9704 | **E-mail:** KSB@kaman.com
GERMANY: RWG GERMANY GmbH Medbacher Weg 1 D-91315 Höchstadt a. d. Aisch | **Tel:** +49 (91 93) 50105 100 | **E-mail:** RWG@kaman.com

Spherical Bearings

EN4614 R

- Self-Lubricating
- CRES
- With Mounting Grooves

Specifications

Diameter Code	d		Δ dmp		D		Δ Dmp		B		C	
									-0.050	-0.0020	±0.13	±0.005
	mm	Inch	mm	Inch	mm	Inch	mm	Inch	mm	Inch	mm	Inch
03	4.826	0.1900	-0.013	-0.0005	15.875	0.6250	-0.008	-0.0003	11.100	0.4370	8.310	0.3272
04	6.350	0.2500	-0.013	-0.0005	15.875	0.6250	-0.008	-0.0003	11.100	0.4370	8.310	0.3272
05	7.937	0.3125	-0.013	-0.0005	17.462	0.6875	-0.008	-0.0003	11.100	0.4370	8.050	0.3169
06	9.525	0.3750	-0.013	-0.0005	20.638	0.8125	-0.009	-0.0004	12.700	0.5000	10.310	0.4059
07	11.113	0.4375	-0.013	-0.0005	23.812	0.9375	-0.009	-0.0004	14.280	0.5622	11.230	0.4421
07A	11.113	0.4375	-0.013	-0.0005	23.017	0.9062	-0.009	-0.0004	14.280	0.5622	11.230	0.4421
08	12.700	0.5000	-0.013	-0.0005	25.400	1.0000	-0.009	-0.0004	15.880	0.6252	12.830	0.5051
9	14.288	0.5625	-0.013	-0.0005	28.575	1.1250	-0.009	-0.0004	17.450	0.6870	13.610	0.5358
10	15.875	0.6250	-0.013	-0.0005	30.163	1.1875	-0.009	-0.0004	19.050	0.7500	14.400	0.5669
12	19.050	0.7500	-0.013	-0.0005	34.925	1.3750	-0.011	-0.0004	22.230	0.8752	16.000	0.6299
14	22.225	0.8750	-0.013	-0.0005	41.275	1.6250	-0.011	-0.0004	22.230	0.8752	19.180	0.7551
16	25.400	1.0000	-0.013	-0.0005	53.975	2.1250	-0.013	-0.0005	34.930	1.3752	25.530	1.0051
20	31.750	1.2500	-0.013	-0.0005	60.325	2.3750	-0.013	-0.0005	38.100	1.5000	28.700	1.1299
24	38.100	1.5000	-0.013	-0.0005	68.262	2.6875	-0.013	-0.0005	42.850	1.6870	31.060	1.2228
28	44.450	1.7500	-0.013	-0.0005	76.200	3.0000	-0.013	-0.0005	46.020	1.8118	33.450	1.3169
32	50.800	2.0000	-0.013	-0.0005	82.550	3.2500	-0.013	-0.0005	49.190	1.9366	35.050	1.3799

Diameter Code	d_1 (min.)		d_2		P		r_2		α (min.)	ß
			-0.200	-0.008	-0.254	-0.010				
	mm	Inch	mm	Inch	mm	Inch	mm	Inch		
03	7.620	0.3000	14.300	0.5630	0.635	0.0250	0.127 to 0.305	0.0050 to 0.0100	15°	20°
04	7.620	0.3000	14.300	0.5630	0.635	0.0250	0.127 to 0.305	0.0050 to 0.0100	15°	20°
05	9.140	0.3598	15.870	0.6248	0.635	0.0250	0.127 to 0.305	0.0050 to 0.0100	14°	30°
06	11.840	0.4661	18.080	0.7118	0.889	0.0350	0.254 to 0.432	0.0100 to 0.0170	8°	30°
07	13.640	0.5370	21.260	0.8370	0.889	0.0350	0.254 to 0.432	0.0100 to 0.0170	10°	30°
07A	13.640	0.5370	20.520	0.8079	0.889	0.0350	0.254 to 0.432	0.0100 to 0.0170	10°	30°
08	15.420	0.6071	22.860	0.9000	0.889	0.0350	0.254 to 0.432	0.0100 to 0.0170	9°	30°
9	18.310	0.7209	26.030	1.0248	0.889	0.0350	0.254 to 0.432	0.0100 to 0.0170	10°	30°
10	18.970	0.7469	27.600	1.0866	0.889	0.0350	0.254 to 0.432	0.0100 to 0.0170	12°	30°
12	21.460	0.8449	31.780	1.2512	1.397	0.0550	0.254 to 0.432	0.0100 to 0.0170	13°	30°
14	25.270	0.9949	38.120	1.5008	1.397	0.0550	0.254 to 0.432	0.0100 to 0.0170	6°	30°
16	32.230	1.2689	50.820	2.0008	1.397	0.0550	0.254 to 0.432	0.0100 to 0.0170	12°	30°
20	37.150	1.4626	57.170	2.2508	1.397	0.0550	0.254 to 0.432	0.0100 to 0.0170	12°	30°
24	45.500	1.7913	65.080	2.5622	1.397	0.0550	0.254 to 0.432	0.0100 to 0.0170	13°	30°
28	49.900	1.9646	73.050	2.8760	1.397	0.0550	0.254 to 0.432	0.0100 to 0.0170	12°	30°
32	56.100	2.2087	79.350	3.1240	1.397	0.0550	0.254 to 0.432	0.0100 to 0.0170	12°	30°

Schematic Drawing

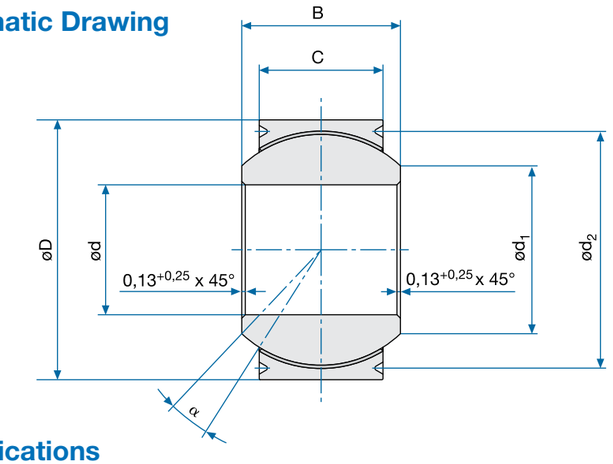

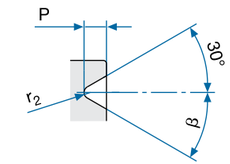

(TYP)

Specifications

EN4614 R

Diameter Code	Starting Torque Normal / Code N		Starting Torque Reduced /Code X		Static Radial Limit Load		Static Axial Limit Load		Radial Dynamic Load		Weight	
	Nm	In.-lbs	Nm	In.-lbs	kN	lbs	kN	lbs	kN	lbs	g	lbs
03	0.06 to 0.56	0.53 to 3.0	0 to 0.11	0 to 1.0	10.7	2405.4	6.3	1416.2	10.7	2405.4	13	0.029
04	0.11 to 0.56	1.0 to 5.0	0 to 0.11	0 to 1.0	24.5	5507.6	6.3	1416.2	21.7	4878.2	12	0.026
05	0.11 to 0.56	1.0 to 5.0	0 to 0.11	0 to 1.0	45.6	10250.9	5.9	1326.3	22.3	5013.0	13	0.029
06	0.11 to 0.56	1.0 to 5.0	0 to 0.11	0 to 1.0	72.1	16208.1	10.2	2293.0	35.6	8002.9	23	0.051
07	0.11 to 0.56	1.0 to 5.0	0.03 to 0.15	.27 to 1.33	90.9	20434.3	12.3	2765.0	44.4	9981.1	33	0.073
07A	0.11 to 0.56	1.0 to 5.0	0.03 to 0.15	.27 to 1.33	90.9	20434.3	12.3	2765.0	44.4	9981.1	30	0.066
08	0.11 to 0.56	1.0 to 5.0	0.03 to 0.15	.27 to 1.33	117.8	26481.4	16.5	3709.2	57.6	12948.5	40	0.088
9	0.11 to 0.56	1.0 to 5.0	0.03 to 0.15	.27 to 1.33	131.7	29606.2	23.7	5327.8	64.4	14477.1	56	0.123
10	0.11 to 0.56	1.0 to 5.0	0.03 to 0.15	.27 to 1.33	149.5	33607.6	27.0	6069.6	73.1	16432.9	63	0.139
12	0.11 to 0.56	1.0 to 5.0	0.03 to 0.15	.27 to 1.33	190.8	42891.8	33.3	7485.8	93.3	20973.8	92	0.202
14	0.23 to 0.90	2.0 to 8.0	0.04 to 0.25	.35 to 2.21	256.0	57548.8	50.5	11352.4	125.1	28122.5	146	0.321
16	0.23 to 0.90	2.0 to 8.0	0.04 to 0.25	.35 to 2.21	497.3	111793.0	95.5	21468.4	243.1	54648.9	392	0.862
20	0.23 to 1.50	2.0 to 13.3	0.05 to 0.32	.44 to 2.83	632.7	142231.0	123.4	27740.3	309.3	69530.6	500	1.100
24	0.23 to 1.50	2.0 to 13.3	0.05 to 0.32	.44 to 2.83	809.5	181975.6	146.4	32910.7	395.7	88953.4	682	1.500
28	0.23 to 1.50	2.0 to 13.3	0.05 to 0.32	.44 to 2.83	952.1	214032.1	171.7	38598.2	465.5	104644.4	859	1.890
32	0.23 to 1.50	2.0 to 13.3	0.05 to 0.32	.44 to 2.83	1100.3	247347.4	189.8	42667.0	537.9	120919.9	1005	2.211

Designation

EN4614
Number of Standard

R
Type of Mounting
R: With Mounting Grooves

Part Number Example
EN4614 R 03 N T A

03
Diameter Code

N
Starting Torque / Low Breakaway Torque Option
N: Normal
X: Reduced

T
Surface Treatment
T: Passivated
P: Outer Ring Cadmium Plated

A
Bonded Liner Technology

Bearing Materials:

Liner
per EN2755 / SAE AS81820

Outer Ring
EN3161 / 1.4548 / 17-4 PH H1150

Inner Ring
EN2030 / 1.3544.9 / AISI 440C

Technical Specification
EN2755

** Inch dimensions are for reference only. | * Permanently marked in non-functional area.*

Contact

USA: KAMATICS CORPORATION 1330 Blue Hills Avenue Bloomfield, CT 06002 USA | **Tel:** +1 860 243 9704 | **E-mail:** KSB@kaman.com
GERMANY: RWG GERMANY GmbH Medbacher Weg 1 D-91315 Höchstadt a. d. Aisch | **Tel:** +49 (91 93) 50105 100 | **E-mail:** RWG@kaman.com

Spherical Bearings

EN4614 S

- Self-Lubricating
- CRES
- Chamfered Outer Race
- Without Mounting Grooves

Specifications

Diameter Code	d		Δ dmp		D		Δ Dmp		B	
									–0.050	–0.0020
	mm	Inch	mm	Inch	mm	Inch	mm	Inch	mm	Inch
03	4.826	0.1900	-0.013	-0.0005	15.875	0.6250	-0.008	-0.0003	11.100	0.4370
04	6.350	0.2500	-0.013	-0.0005	15.875	0.6250	-0.008	-0.0003	11.100	0.4370
05	7.937	0.3125	-0.013	-0.0005	17.462	0.6875	-0.008	-0.0003	11.100	0.4370
06	9.525	0.3750	-0.013	-0.0005	20.638	0.8125	-0.009	-0.0004	12.700	0.5000
07	11.113	0.4375	-0.013	-0.0005	23.812	0.9375	-0.009	-0.0004	14.280	0.5622
08	12.700	0.5000	-0.013	-0.0005	25.400	1.0000	-0.009	-0.0004	15.880	0.6252
09	14.288	0.5625	-0.013	-0.0005	28.575	1.1250	-0.009	-0.0004	17.450	0.6870
10	15.875	0.6250	-0.013	-0.0005	30.163	1.1875	-0.009	-0.0004	19.050	0.7500
12	19.050	0.7500	-0.013	-0.0005	34.925	1.3750	-0.011	-0.0004	22.230	0.8752
14	22.225	0.8750	-0.013	-0.0005	41.275	1.6250	-0.011	-0.0004	22.230	0.8752
16	25.400	1.0000	-0.013	-0.0005	53.975	2.1250	-0.013	-0.0005	34.930	1.3752
20	31.750	1.2500	-0.013	-0.0005	60.325	2.3750	-0.013	-0.0005	38.100	1.5000
24	38.100	1.5000	-0.013	-0.0005	68.262	2.6875	-0.013	-0.0005	42.850	1.6870
28	44.450	1.7500	-0.013	-0.0005	76.200	3.0000	-0.013	-0.0005	46.020	1.8118
32	50.800	2.0000	-0.013	-0.0005	82.550	3.2500	-0.013	-0.0005	49.190	1.9366

Diameter Code	C		d_1 (min.)		r_1 x 45°		Starting Torque Normal / Code N		α (min.)
	±0.13	±0.005			-0.254	-0.01			
	mm	Inch	mm	Inch	mm	Inch	Nm	In.-lbs	
03	8.310	0.3272	7.620	0.3000	0.508	0.0200	0.06 to 0.56	0.53 to 3.0	15°
04	8.310	0.3272	7.620	0.3000	0.508	0.0200	0.11 to 0.56	1.0 to 5.0	15°
05	8.050	0.3169	9.140	0.3598	0.508	0.0200	0.11 to 0.56	1.0 to 5.0	14°
06	10.310	0.4059	11.840	0.4661	0.762	0.0300	0.11 to 0.56	1.0 to 5.0	8°
07	11.230	0.4421	13.640	0.5370	0.762	0.0300	0.11 to 0.56	1.0 to 5.0	10°
08	12.830	0.5051	15.420	0.6071	0.762	0.0300	0.11 to 0.56	1.0 to 5.0	9°
09	13.610	0.5358	18.310	0.7209	0.762	0.0300	0.11 to 0.56	1.0 to 5.0	10°
10	14.400	0.5669	18.970	0.7469	0.762	0.0300	0.11 to 0.56	1.0 to 5.0	12°
12	16.000	0.6299	21.460	0.8449	1.016	0.0400	0.11 to 0.56	1.0 to 5.0	13°
14	19.180	0.7551	25.270	0.9949	1.016	0.0400	0.23 to 0.90	2.0 to 8.0	6°
16	25.530	1.0051	32.230	1.2689	1.016	0.0400	0.23 to 0.90	2.0 to 8.0	12°
20	28.700	1.1299	37.150	1.4626	1.016	0.0400	0.23 to 1.50	2.0 to 13.3	12°
24	31.060	1.2228	45.500	1.7913	1.016	0.0400	0.23 to 1.50	2.0 to 13.3	13°
28	33.450	1.3169	49.900	1.9646	1.016	0.0400	0.23 to 1.50	2.0 to 13.3	12°
32	35.050	1.3799	56.100	2.2087	1.016	0.0400	0.23 to 1.50	2.0 to 13.3	12°

Schematic Drawing

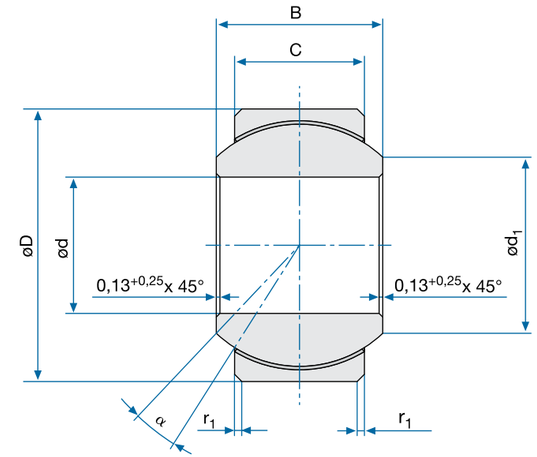

Specifications

EN4614 S

Diameter Code	Starting Torque Reduced /Code X		Static Radial Limit Load		Static Axial Limit Load		Radial Dynamic Load		Weight	
	Nm	In.-lbs	kN	lbs	kN	lbs	kN	lbs	g	lbs
03	0 to 0.11	0 to 1.0	10.07	2263.7	6.3	1416.2	10.7	2405.4	13	0.029
04	0 to 0.11	0 to 1.0	24.5	5507.6	6.3	1416.2	21.7	4878.2	12	0.026
05	0 to 0.11	0 to 1.0	45.6	10250.9	5.9	1326.3	22.3	5013.0	13	0.029
06	0 to 0.11	0 to 1.0	72.1	16208.1	10.2	2293.0	35.6	8002.9	23	0.051
07	0.03 to 0.15	0.27 to 1.33	90.9	20434.3	12.3	2765.0	44.4	9981.1	33	0.073
08	0.03 to 0.15	0.27 to 1.33	117.8	26481.4	16.5	3709.2	57.6	12948.5	40	0.088
09	0.03 to 0.15	0.27 to 1.33	131.7	29606.2	23.7	5327.8	64.4	14477.1	56	0.123
10	0.03 to 0.15	0.27 to 1.33	149.5	33607.6	27.0	6069.6	73.1	16432.9	63	0.139
12	0.03 to 0.15	0.27 to 1.33	190.8	42891.8	33.3	7485.8	93.3	20973.8	92	0.202
14	0.04 to 0.25	0.35 to 2.21	256	57548.8	50.5	11352.4	125.1	28122.5	146	0.321
16	0.04 to 0.25	0.35 to 2.21	497.3	111793.0	95.5	21468.4	243.1	54648.9	392	0.862
20	0.05 to 0.32	0.44 to 2.83	632.7	142231.0	123.4	27740.3	309.3	69530.6	500	1.100
24	0.05 to 0.32	0.44 to 2.83	809.5	181975.6	146.4	32910.7	395.7	88953.4	682	1.500
28	0.05 to 0.32	0.44 to 2.83	952.1	214032.1	171.7	38598.2	465.5	104644.4	859	1.890
32	0.05 to 0.32	0.44 to 2.83	1100.3	247347.4	189.8	42667.0	537.9	120919.9	1005	2.211

Designation

EN4614
Number of Standard

S
Type of Mounting
S: Without Mounting Grooves

03
Diameter Code

N
Low Breakaway Torque Option
N: Normal
X: Reduced

T
Surface Treatment
T: Passivated
P: Outer Ring Cadmium Plated

A
Bonded Liner Technology

Part Number Example
EN4614 S 03 N T A

Bearing Materials:

Liner
per EN2755 / SAE AS81820

Outer Ring
EN3161 / 1.4548 / 17-4 PH H1150

Inner Ring
EN2030 / 1.3544.9 / AISI 440C

Technical Specification
EN2755

** Inch dimensions are for reference only. | * Permanently marked in non-functional area.*

Contact

USA: KAMATICS CORPORATION 1330 Blue Hills Avenue Bloomfield, CT 06002 USA | **Tel:** +1 860 243 9704 | **E-mail:** KSB@kaman.com
GERMANY: RWG GERMANY GmbH Medbacher Weg 1 D-91315 Höchstadt a. d. Aisch | **Tel:** +49 (91 93) 50105 100 | **E-mail:** RWG@kaman.com

Spherical Bearings

FMGB... .4

- Self-Lubricating
- CRES
- Dimensions According to AS14102 / 14103

Specifications

Diameter Code	d		Δ dmp		D		Δ Dmp		B		C	
									–0.050	–0.0020	±0.127	±0.0050
	mm	Inch	mm	Inch	mm	Inch	mm	Inch	mm	Inch	mm	Inch
3.4	4.826	0.1900	-0.012	-0.0005	15.875	0.6250	-0.012	-0.0005	11.100	0.4370	8.306	0.3270
4.4	6.350	0.2500	-0.012	-0.0005	15.875	0.6250	-0.012	-0.0005	11.100	0.4370	8.306	0.3270
5.4	7.937	0.3125	-0.012	-0.0005	17.462	0.6875	-0.012	-0.0005	11.100	0.4370	8.052	0.3170
6.4	9.525	0.3750	-0.012	-0.0005	20.637	0.8125	-0.012	-0.0005	12.700	0.5000	10.312	0.4060
7.4	11.112	0.4375	-0.012	-0.0005	23.812	0.9375	-0.012	-0.0005	14.275	0.5620	11.227	0.4420
7A.4	11.112	0.4375	-0.012	-0.0005	23.017	0.9062	-0.012	-0.0005	14.275	0.5620	11.227	0.4420
8.4	12.700	0.5000	-0.012	-0.0005	25.400	1.0000	-0.012	-0.0005	15.875	0.6250	12.827	0.5050
9.4	14.287	0.5625	-0.012	-0.0005	28.575	1.1250	-0.012	-0.0005	17.450	0.6870	13.614	0.5360
10.4	15.875	0.6250	-0.012	-0.0005	30.162	1.1875	-0.012	-0.0005	19.050	0.7500	14.402	0.5670
12.4	19.050	0.7500	-0.012	-0.0005	34.925	1.3750	-0.012	-0.0005	22.225	0.8750	16.002	0.6300
14.4	22.225	0.8750	-0.012	-0.0005	41.275	1.6250	-0.012	-0.0005	22.225	0.8750	19.177	0.7550
16.4	25.400	1.0000	-0.012	-0.0005	53.975	2.1250	-0.012	-0.0005	34.925	1.3750	25.527	1.0050
20.4	31.750	1.2500	-0.012	-0.0005	60.325	2.3750	-0.012	-0.0005	38.100	1.5000	28.702	1.1300
24.4	38.100	1.5000	-0.012	-0.0005	68.262	2.6875	-0.012	-0.0005	42.850	1.6870	31.064	1.2230
28.4	44.450	1.7500	-0.012	-0.0005	76.200	3.0000	-0.012	-0.0005	46.024	1.8120	33.452	1.3170
32.4	50.800	2.0000	-0.012	-0.0005	82.550	3.2500	-0.012	-0.0005	49.199	1.9370	35.052	1.3800

Diameter Code	d_1 (min.)		d_2		P		r_1 x 45°		r_2		Δ $r_2$mp	
			-0.203	-0.008	-0.254	-0.01	+0.254	+0.010				
	mm	Inch	mm	Inch	mm	Inch	mm	Inch	mm	Inch	mm	Inch
3.4	7.660	0.3016	14.300	0.5630	0.635	0.0250	0.381	0.0150	0.127	0.0050	+ 0.127	+0.0050
4.4	7.660	0.3016	14.300	0.5630	0.635	0.0250	0.381	0.0150	0.127	0.0050	+0.127	+0.0050
5.4	10.181	0.4008	15.875	0.6250	0.635	0.0250	0.381	0.0150	0.127	0.0050	+0.127	+0.0050
6.4	11.967	0.4711	18.085	0.7120	0.889	0.0350	0.508	0.0200	0.254	0.0100	+0.178	+0.0070
7.4	13.774	0.5423	21.260	0.8370	0.889	0.0350	0.508	0.0200	0.254	0.0100	+0.178	+0.0070
7A.4	13.774	0.5423	20.472	0.8060	0.889	0.0350	0.508	0.0200	0.254	0.0100	+0.178	+0.0070
8.4	15.554	0.6124	22.860	0.9000	0.889	0.0350	0.508	0.0200	0.254	0.0100	+0.178	+0.0070
9.4	18.457	0.7267	26.035	1.0250	0.889	0.0350	0.508	0.0200	0.254	0.0100	+0.178	+0.0070
10.4	19.098	0.7519	27.610	1.0870	0.889	0.0350	0.508	0.0200	0.254	0.0100	+0.178	+0.0070
12.4	22.674	0.8927	31.775	1.2510	1.397	0.0550	0.762	0.0300	0.254	0.0100	+0.178	+0.0070
14.4	26.941	1.0607	38.125	1.5010	1.397	0.0550	0.762	0.0300	0.254	0.0100	+0.178	+0.0070
16.4	32.378	1.2747	50.825	2.0010	1.397	0.0550	0.762	0.0300	0.254	0.0100	+0.178	+0.0070
20.4	37.075	1.4596	57.227	2.2530	1.397	0.0550	0.762	0.0300	0.254	0.0100	+0.178	+0.0070
24.4	45.500	1.7913	65.164	2.5655	1.397	0.0550	0.762	0.0300	0.254	0.0100	+0.178	+0.0070
28.4	49.878	1.9637	73.102	2.8780	1.397	0.0550	0.762	0.0300	0.254	0.0100	+0.178	+0.0070
32.4	56.075	2.2077	79.452	3.1280	1.397	0.0550	1.016	0.0400	0.254	0.0100	+0.178	+0.0070

Schematic Drawing

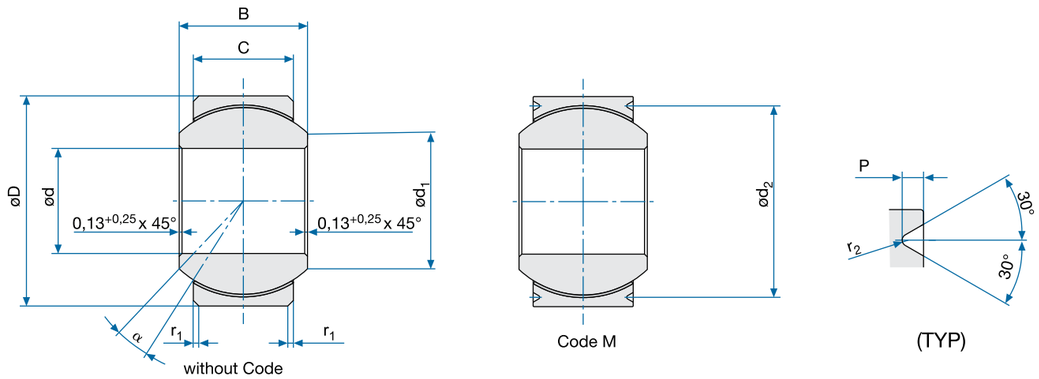

Specifications

FMGB... .4

Diameter Code	Starting Torque Normal / No Code		Starting Torque Reduced /Code X		Static Radial Limit Load		Static Axial Limit Load		Weight		α (REF)
	Nm	In.-lbs	Nm	In.-lbs	kN	lbs	kN	lbs	g	lbs	
3.4	0.03 to 0.56	0.53 to 3.0	0.06 max.	0.53 max	11.12	2499.8	7.87	1769.2	14	0.031	15°
4.4	0.03 to 0.56	1.0 to 5.0	0.06 max.	0.53 max	24.46	5498.6	7.87	1769.2	14	0.031	15°
5.4	0.03 to 0.90	1.0 to 5.0	0.11 max.	1.0 max	41.81	9398.9	7.29	1638.8	16	0.035	14°
6.4	0.03 to 0.90	1.0 to 5.0	0.11 max.	1.0 max	60.94	13699.3	11.70	2630.2	27	0.059	8°
7.4	0.03 to 0.90	1.0 to 5.0	0.11 max.	1.0 max	92.07	20697.3	16.23	3648.5	36	0.079	10°
7A.4	0.03 to 0.90	1.0 to 5.0	0.11 max.	1.0 max	87.62	19697.0	16.23	3648.5	36	0.079	10°
8.4	0.03 to 0.90	1.0 to 5.0	0.11 max.	1.0 max	95.19	21398.7	22.10	4968.1	45	0.099	9°
9.4	0.03 to 0.90	1.0 to 5.0	0.11 max.	1.0 max	118.32	26598.3	23.88	5368.2	61	0.134	10°
10.4	0.03 to 0.90	1.0 to 5.0	0.11 max.	1.0 max	128.99	28997.0	27.27	6130.3	73	0.161	12°
12.4	0.03 to 0.90	2.0 to 8.1	0.11 max.	1.0 max	164.58	36997.6	34.38	7728.6	109	0.240	13°
14.4	0.03 to 1.36	2.0 to 12.0	0.23 max.	2.0 max	290.01	65194.2	48.04	10799.4	159	0.350	6°
16.4	0.03 to 1.36	2.0 to 12.0	0.23 max.	2.0 max	462.59	103990.2	85.85	19299.1	440	0.968	12°
20.4	0.23 to 1.32	2.0 to 11.7	0.11 to 0.25	1.0 to 2.2	579.5	130271.6	108.27	24339.1	499	1.098	13°
24.4	0.23 to 1.32	2.0 to 11.7	0.11 to 0.25	1.0 to 2.2	733.8	164958.2	135.20	30393.0	762	1.676	13°
28.4	0.23 to 1.32	2.0 to 11.7	0.11 to 0.25	1.0 to 2.2	868.5	195238.8	158.30	35585.8	838	1.844	13°
32.4	0.23 to 1.32	2.0 to 11.7	0.11 to 0.25	1.0 to 2.2	1000	224800.0	169.00	37991.2	975	2.145	13°

Designation

FMGB
Bearing Number

M
Type of Mounting
M: With Mounting Grooves
None: Without Mounting Grooves

Part Number Example
FMGB 5.4 M C P X

5.4
Diameter Code

C
Ball Material
None: EN2030 / 1.3544.9 / AISI 440C
C: 13-8Mo H1000

P
Surface Treatment
No Code: None
P: Outer Ring Cadmium Plated

X
Starting Torque
None: Normal
X: Reduced

Bearing Materials:

Liner
per SAE AS81820

Outer Ring
EN3161 / 1.4548 / 17-4PH H1150

Technical Specification
SAE AS81820

** Inch dimensions are for reference only. | * Permanently marked in non-functional area.*

Contact

USA: KAMATICS CORPORATION 1330 Blue Hills Avenue Bloomfield, CT 06002 USA | **Tel:** +1 860 243 9704 | **E-mail:** KSB@kaman.com
GERMANY: RWG GERMANY GmbH Medbacher Weg 1 D-91315 Höchstadt a. d. Aisch | **Tel:** +49 (91 93) 50105 100 | **E-mail:** RWG@kaman.com

Spherical Bearings

FMGN... .4

- Self-Lubricating
- CRES
- Dimensions According to AS14101

Specifications

Diameter Code	d		Δ dmp		D		Δ Dmp		B		C	
									–0.050	–0.0020	±0.127	±0.005
	mm	Inch	mm	Inch	mm	Inch	mm	Inch	mm	Inch	mm	Inch
3.4	4.826	0.1900	-0.012	-0.0005	14.287	0.5625	-0.012	-0.0005	7.137	0.2810	5.537	0.2180
4.4	6.350	0.2500	-0.012	-0.0005	16.667	0.6562	-0.012	-0.0005	8.712	0.3430	6.350	0.2500
5.4M	7.937	0.3125	-0.012	-0.0005	19.050	0.7500	-0.012	-0.0005	9.525	0.3750	7.137	0.2810
5.4	7.937	0.3125	-0.012	-0.0005	19.050	0.7500	-0.012	-0.0005	9.525	0.3750	7.137	0.2810
6.4	9.525	0.3750	-0.012	-0.0005	20.637	0.8125	-0.012	-0.0005	10.312	0.4060	7.925	0.3120
7.4	11.112	0.4375	-0.012	-0.0005	23.017	0.9062	-0.012	-0.0005	11.100	0.4370	8.712	0.3430
8.4	12.700	0.5000	-0.012	-0.0005	25.400	1.0000	-0.012	-0.0005	12.700	0.5000	9.906	0.3900
9.4	14.287	0.5625	-0.012	-0.0005	27.780	1.0937	-0.012	-0.0005	14.275	0.5620	11.100	0.4370
10.4	15.875	0.6250	-0.012	-0.0005	30.162	1.1875	-0.012	-0.0005	15.875	0.6250	12.700	0.5000
12.4	19.050	0.7500	-0.012	-0.0005	36.512	1.4375	-0.012	-0.0005	19.050	0.7500	15.062	0.5930
14.4	22.225	0.8750	-0.012	-0.0005	39.687	1.5625	-0.012	-0.0005	22.225	0.8750	17.856	0.7030
16.4	25.400	1.0000	-0.012	-0.0005	44.450	1.7500	-0.012	-0.0005	25.400	1.0000	20.243	0.7970
20.4	31.750	1.2500	-0.012	-0.0005	50.800	2.0000	-0.012	-0.0005	27.762	1.0930	23.926	0.9420
24.4	38.100	1.5000	-0.012	-0.0005	61.912	2.4375	-0.012	-0.0005	33.325	1.3120	28.702	1.1300
28.4	44.450	1.7500	-0.012	-0.0005	71.437	2.8125	-0.012	-0.0005	38.887	1.5310	33.452	1.3170

Diameter Code	d_1 (min.)		d_2		P		r_2		Δr_2mp		α (REF)
			-0.203	-0.0080	-0.254	-0.0100					
	mm	Inch	mm	Inch	mm	Inch	mm	Inch	mm	Inch	
3.4	9.250	0.3642	14.300	0.5630	0.635	0.0250	0.127	0.0050	+0.127	+0.0050	10°
4.4	9.240	0.3638	14.300	0.5630	0.635	0.0250	0.127	0.0050	+0.127	+0.0050	10°
5.4M	11.667	0.4593	15.875	0.6250	0.889	0.0350	0.127	0.0050	+0.127	+0.0050	10°
5.4	11.667	0.4593	18.085	0.7120	0.889	0.0350	0.127	0.0050	+0.127	+0.0050	10°
6.4	13.087	0.5152	21.260	0.8370	0.889	0.0350	0.254	0.0100	+0.178	+0.0070	9°
7.4	15.482	0.6095	20.472	0.8060	0.889	0.0350	0.254	0.0100	+0.178	+0.0070	8°
8.4	16.251	0.6398	22.860	0.9000	1.397	0.0550	0.254	0.0100	+0.178	+0.0070	8°
9.4	18.050	0.7106	26.035	1.0250	1.397	0.0550	0.254	0.0100	+0.178	+0.0070	8°
10.4	20.313	0.7997	27.610	1.0870	1.397	0.0550	0.254	0.0100	+0.178	+0.0070	8°
12.4	25.400	1.0000	31.775	1.2510	1.397	0.0550	0.254	0.0100	+0.178	+0.0070	8°
14.4	26.940	1.0606	38.125	1.5010	1.397	0.0550	0.254	0.0100	+0.178	+0.0070	8°
16.4	30.478	1.1999	50.825	2.0010	1.397	0.0550	0.254	0.0100	+0.178	+0.0070	9°
20.4	36.426	1.4341	57.227	2.2530	1.397	0.0550	0.254	0.0100	+0.178	+0.0070	6°
24.4	46.428	1.8279	65.164	2.5655	1.397	0.0550	0.254	0.0100	+0.178	+0.0070	6°
28.4	50.712	1.9965	73.102	2.8780	1.397	0.0550	0.254	0.0100	+0.178	+0.0070	6°

Schematic Drawing

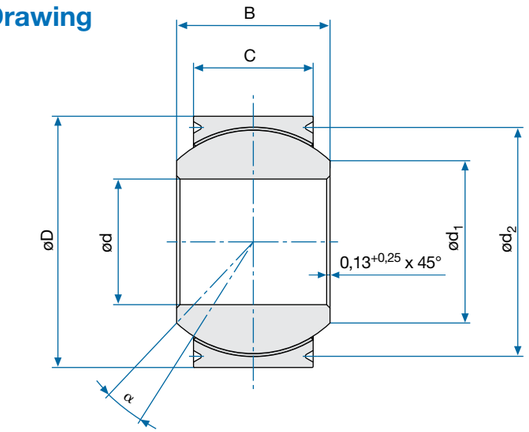

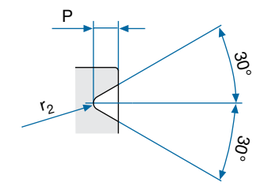

Specifications

FMGN... .4

Diameter Code	Starting Torque Normal / No Code		Starting Torque Reduced / Code X		Static Radial Limit Load		Static Axial Limit Load		Weight	
	Nm	In.-lbs	Nm	In.-lbs	kN	lbs	kN	lbs	g	lbs
3.4	0.03 to 0.56	0.27 to 5.0	0.060 max.	0.53 max.	26.86	6038.1	0.66	148.4	9	0.020
4.4	0.03 to 0.56	0.27 to 5.0	0.110 max.	0.97 max.	38.92	8749.2	1.91	429.4	9	0.020
5.4M	0.03 to 0.90	0.27 to 8.0	0.110 max.	0.97 max.	38.92	8749.2	3.11	699.1	14	0.031
5.4	0.03 to 0.90	0.27 to 8.0	0.110 max.	0.97 max.	46.88	10538.6	3.11	699.1	14	0.031
6.4	0.03 to 0.90	0.27 to 8.0	0.110 max.	0.97 max.	58.71	13198.0	4.89	1099.3	18	0.040
7.4	0.03 to 0.90	0.27 to 8.0	0.110 max.	0.97 max.	79.62	17898.6	6.22	1398.3	23	0.051
8.4	0.03 to 0.90	0.27 to 8.0	0.110 max.	0.97 max.	103.19	23197.1	9.34	2099.6	32	0.070
9.4	0.03 to 0.90	0.27 to 8.0	0.110 max.	0.97 max.	135.66	30496.4	16.36	3677.7	41	0.090
10.4	0.03 to 0.90	0.27 to 8.0	0.110 max.	0.97 max.	206.38	46394.2	20.99	4718.6	54	0.119
12.4	0.03 to 0.90	0.27 to 8.0	0.230 max.	2.04 max.	276.66	62193.2	30.02	6748.5	95	0.209
14.4	0.03 to 1.36	0.27 to 12.0	0.230 max.	2.04 max.	365.62	82191.4	41.58	9347.2	123	0.271
16.4	0.03 to 1.36	0.27 to 12.0	0.110 to 0.250	0.97 to 2.21	405.00	91044.0	54.08	12157.2	177	0.389
20.4	0.23 to 1.32	2.0 to 11.7	0.110 to 0.250	0.97 to 2.21	702.78	157984.9	76.00	17084.8	240	0.528
24.4	0.23 to 1.32	2.0 to 11.7	0.110 to 0.250	0.97 to 2.21	956.32	214980.7	111.00	24952.8	430	0.946
28.4	0.23 to 1.32	2.0 to 11.7	0.110 to 0.250	0.97 to 2.21	956.32	214980.7	151.80	34124.6	658	1.448

Designation

FMGN
Bearing Number

5.4
Diameter Code

C
Ball Material
None: EN2030 / 1.3544.9 / AISI 440C
C: 13-8Mo H1000

P
Surface Treatment
No Code: None
P: Outer Ring Cadmium Plated

X
Starting Torque
None: Normal
X: Reduced

Part Number Example
FMGN 5.4 C P X

Bearing Materials:

Liner
per SAE AS81820

Outer Ring
EN3161 / 1.4548 / 17-4PH H1150

Technical Specification
SAE AS81820

** Inch dimensions are for reference only. | * Permanently marked in non-functional area.*

Contact

USA: KAMATICS CORPORATION 1330 Blue Hills Avenue Bloomfield, CT 06002 USA | **Tel:** +1 860 243 9704 | **E-mail:** KSB@kaman.com
GERMANY: RWG GERMANY GmbH Medbacher Weg 1 D-91315 Höchstadt a. d. Aisch | **Tel:** +49 (91 93) 50105 100 | **E-mail:** RWG@kaman.com

Spherical Bearings

FMGS... .4

- Self-Lubricating
- CRES
- According to AS14104

Specifications

Diameter Code	d		Δ dmp		D		Δ Dmp		B	
									–0.050	–0.0020
	mm	Inch	mm	Inch	mm	Inch	mm	Inch	mm	Inch
3.4	4.826	0.1900	-0.012	-0.0005	14.288	0.5625	-0.012	-0.0005	7.137	0.2810
4.4	6.350	0.2500	-0.012	-0.0005	16.667	0.6562	-0.012	-0.0005	8.712	0.3430
5.4	7.938	0.3125	-0.012	-0.0005	19.050	0.7500	-0.012	-0.0005	9.525	0.3750
6.4	9.525	0.3750	-0.012	-0.0005	20.638	0.8125	-0.012	-0.0005	10.312	0.4060
7.4	11.112	0.4375	-0.012	-0.0005	23.017	0.9062	-0.012	-0.0005	11.100	0.4370
8.4	12.700	0.5000	-0.012	-0.0005	25.400	1.0000	-0.012	-0.0005	12.700	0.5000
9.4	14.288	0.5625	-0.012	-0.0005	27.780	1.0937	-0.012	-0.0005	14.275	0.5620
10.4	15.875	0.6250	-0.012	-0.0005	30.162	1.1875	-0.012	-0.0005	15.875	0.6250
12.4	19.050	0.7500	-0.012	-0.0005	36.512	1.4375	-0.012	-0.0005	19.050	0.7500
14.4	22.225	0.8750	-0.012	-0.0005	39.688	1.5625	-0.012	-0.0005	22.225	0.8750
16.4	25.400	1.0000	-0.012	-0.0005	44.450	1.7500	-0.012	-0.0005	25.400	1.0000
20.4	31.750	1.2500	-0.012	-0.0005	50.800	2.0000	-0.012	-0.0005	27.762	1.0930
24.4	38.100	1.5000	-0.012	-0.0005	61.912	2.4375	-0.012	-0.0005	33.325	1.3120

Diameter Code	C		d_1 (min.)		r_1 x 45°		r_4 x 45°		α
	±0.127	±0.005			+0.250	+0.0098	+0.250	+0.0098	(REF)
	mm	Inch	mm	Inch	mm	Inch	mm	Inch	
3.4	5.537	0.2180	7.442	0.2930	0.254	0.0100	0.120	0.0047	10°
4.4	6.350	0.2500	9.246	0.3640	0.254	0.0100	0.120	0.0047	10°
5.4	7.137	0.2810	10.643	0.4190	0.254	0.0100	0.120	0.0047	10°
6.4	7.925	0.3120	12.065	0.4750	0.508	0.0200	0.120	0.0047	9°
7.4	8.712	0.3430	13.462	0.5300	0.508	0.0200	0.120	0.0047	8°
8.4	9.906	0.3900	15.240	0.6000	0.508	0.0200	0.120	0.0047	8°
9.4	11.100	0.4370	17.018	0.6700	0.508	0.0200	0.120	0.0047	8°
10.4	12.700	0.5000	18.771	0.7390	0.508	0.0200	0.120	0.0047	8°
12.4	15.062	0.5930	23.368	0.9200	0.762	0.0300	0.120	0.0047	8°
14.4	17.856	0.7030	24.892	0.9800	0.762	0.0300	0.120	0.0047	8°
16.4	20.244	0.7970	28.397	1.1180	0.762	0.0300	0.120	0.0047	9°
20.4	23.926	0.9420	36.426	1.4341	0.762	0.0300	0.120	0.0047	6°
24.4	28.830	1.1350	46.428	1.8279	0.762	0.0300	0.120	0.0047	6°

Schematic Drawing

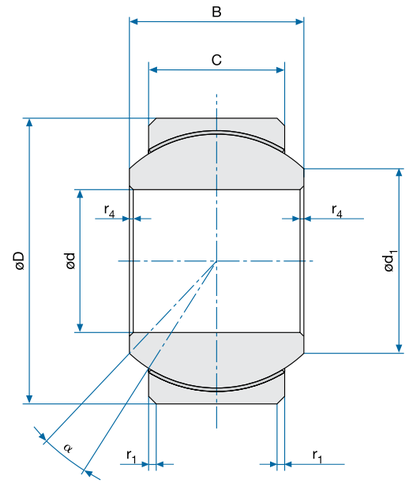

Specifications

FMGS... .4

Diameter Code	Starting Torque Normal / No Code		Starting Torque Reduced /Code X		Static Radial Limit Load		Static Axial Limit Load		Weight	
	Nm	In.-lbs	Nm	In.-lbs	kN	lbs	kN	lbs	g	lbs
3.4	0.03 to 0.56	0.27 to 5.0	0.06 max.	0.53 max	17.68	3974.5	0.67	150.6	7	0.015
4.4	0.03 to 0.56	0.27 to 5.0	0.06 max.	0.53 max	26.87	6040.4	1.91	429.4	10	0.022
5.4	0.03 to 0.90	0.27 to 8.0	0.11 max.	0.97 max	38.92	8749.2	3.11	699.1	15	0.033
6.4	0.03 to 0.90	0.27 to 8.0	0.11 max.	0.97 max	46.88	10538.6	4.89	1099.3	17	0.037
7.4	0.03 to 0.90	0.27 to 8.0	0.11 max.	0.97 max	58.71	13198.0	6.23	1400.5	23	0.051
8.4	0.03 to 0.90	0.27 to 8.0	0.11 max.	0.97 max	79.62	17898.6	9.34	2099.6	32	0.070
9.4	0.03 to 0.90	0.27 to 8.0	0.11 max.	0.97 max	103.19	23197.1	16.37	3680.0	41	0.090
10.4	0.03 to 0.90	0.27 to 8.0	0.11 max.	0.97 max	135.66	30496.4	20.99	4718.6	56	0.123
12.4	0.03 to 0.90	0.27 to 8.0	0.11 max.	0.97 max	206.39	46396.5	30.02	6748.5	99	0.218
14.4	0.03 to 1.36	0.27 to 12.0	0.23 max.	2.04 max	276.67	62195.4	41.59	9349.4	125	0.275
16.4	0.03 to 1.36	0.27 to 12.0	0.23 max.	2.04 max	365.63	82193.6	54.09	12159.4	175	0.385
20.4	0.4 to 1.5	3.5 to 13.3	0.11 to 0.25	0.97 to 2.21	498.22	111999.9	73.36	16491.3	240	0.528
24.4	0.4 to 1.5	3.5 to 13.3	0.11 to 0.25	0.97 to 2.21	760.76	171018.8	112.02	25182.1	436	0.959

Designation

FMGS
Bearing Number

5.4
Diameter Code

C
Ball Material
None: EN2030 / 1.3544.9 / AISI 440C
C: 13-8Mo H1000

P
Surface Treatment
No Code: None
P: Outer Ring Cadmium Plated

X
Starting Torque
None: Normal
X: Reduced

Part Number Example
FMGS 5.4 C P X

Bearing Materials:

Liner
per SAE AS81820

Outer Ring
EN3161 / 1.4548 / 17-4PH H1150

Technical Specification
SAE AS81820

** Inch dimensions are for reference only. | * Permanently marked in non-functional area.*

Contact

USA: KAMATICS CORPORATION 1330 Blue Hills Avenue Bloomfield, CT 06002 USA | **Tel:** +1 860 243 9704 | **E-mail:** KSB@kaman.com
GERMANY: RWG GERMANY GmbH Medbacher Weg 1 D-91315 Höchstadt a. d. Aisch | **Tel:** +49 (91 93) 50105 100 | **E-mail:** RWG@kaman.com

Spherical Bearings

FMGU... .4

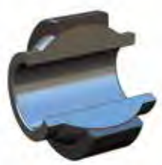

- Self-Lubricating
- CRES

Specifications

Diameter Code	d		Δ dmp		D		Δ Dmp		B		C	
									–0.051	–0.0020	±0.127	±0.0050
	mm	Inch	mm	Inch	mm	Inch	mm	Inch	mm	Inch	mm	Inch
3.4	4.826	0.1900	-0.013	-0.0005	14.288	0.5625	-0.013	-0.0005	12.700	0.5000	5.330	0.2098
3.4A	4.826	0.1900	-0.013	-0.0005	15.875	0.6250	-0.013	-0.0005	14.220	0.5598	8.310	0.3272
4.4	6.350	0.2500	-0.013	-0.0005	18.796	0.7400	-0.012	-0.0005	15.060	0.5929	6.480	0.2551
4.4A	6.350	0.2500	-0.013	-0.0005	16.667	0.6562	-0.013	-0.0005	15.060	0.5929	6.480	0.2551
5.4	7.937	0.3125	-0.013	-0.0005	17.462	0.6875	-0.012	-0.0005	15.880	0.6252	6.480	0.2551
5.4A	7.937	0.3125	-0.013	-0.0005	23.012	0.9060	-0.012	-0.0005	20.650	0.8130	8.760	0.3449
6.4	9.525	0.3750	-0.013	-0.0005	23.012	0.9060	-0.012	-0.0005	20.650	0.8130	7.870	0.3098
6.4A	9.525	0.3750	-0.013	-0.0005	23.012	0.9060	-0.012	-0.0005	20.650	0.8130	8.760	0.3449
7.4	11.113	0.4375	-0.013	-0.0005	25.400	1.0000	-0.012	-0.0005	22.230	0.8752	8.760	0.3449
8.4	12.700	0.5000	-0.013	-0.0005	25.400	1.0000	-0.012	-0.0005	17.780	0.7000	9.910	0.3902
8.4A	12.700	0.5000	-0.013	-0.0005	28.575	1.1250	-0.012	-0.0005	23.800	0.9370	10.180	0.4008
10.4	15.875	0.6250	-0.013	-0.0005	34.925	1.3750	-0.012	-0.0005	30.480	1.2000	14.400	0.5669
10.4A	15.875	0.6250	-0.013	-0.0005	44.450	1.7500	-0.012	-0.0005	38.100	1.5000	16.260	0.6402
12.4	19.050	0.7500	-0.013	-0.0005	39.688	1.5625	-0.012	-0.0005	32.510	1.2799	15.750	0.6201
14.4	22.225	0.8750	-0.013	-0.0005	44.450	1.7500	-0.012	-0.0005	35.560	1.4000	15.880	0.6252
16.4	25.400	1.0000	-0.013	-0.0005	53.975	2.1250	-0.012	-0.0005	47.630	1.8752	21.210	0.8350

Diameter Code	d_1		d_2		P		r_1 x 45°		r_2		r_4 x 45°	
	-0.200	-0.0079	±0.120	±0.0047	+0.250	+0.0098	+ 0.250	+0.0098	+0.250	+0.0098		
	mm	Inch	mm	Inch	mm	Inch	mm	Inch	mm	Inch	mm	Inch
3.4	7.820	0.3079	12.620	0.4969	0.380	0.0150	0.150	0.0059	0.130	0.0051	0.100	0.0039
3.4A	7.900	0.3110	14.220	0.5598	0.380	0.0150	0.150	0.0059	0.130	0.0051	0.100	0.0039
4.4	9.710	0.3823	17.140	0.6748	0.380	0.0150	0.300	0.0118	0.130	0.0051	0.100	0.0039
4.4A	9.220	0.3630	15.040	0.5921	0.380	0.0150	0.250	0.0098	0.130	0.0051	0.100	0.0039
5.4	10.450	0.4114	16.210	0.6382	0.380	0.0150	0.560	0.0220	0.130	0.0051	0.100	0.0039
5.4A	12.650	0.4980	20.440	0.8047	0.630	0.0248	0.560	0.0220	0.250	0.0098	0.100	0.0039
6.4	12.850	0.5059	21.080	0.8299	0.630	0.0248	0.560	0.0220	0.250	0.0098	0.100	0.0039
6.4A	12.850	0.5059	21.210	0.8350	0.630	0.0248	0.560	0.0220	0.250	0.0098	0.100	0.0039
7.4	15.350	0.6043	22.990	0.9051	0.630	0.0248	0.510	0.0201	0.250	0.0098	0.100	0.0039
8.4	15.100	0.5945	22.220	0.8748	0.630	0.0248	0.250	0.0098	0.250	0.0098	0.100	0.0039
8.4A	18.090	0.7122	26.040	1.0252	0.630	0.0248	0.510	0.0201	0.250	0.0098	0.100	0.0039
10.4	21.550	0.8484	32.330	1.2728	0.630	0.0248	0.560	0.0220	0.250	0.0098	0.100	0.0039
10.4A	21.610	0.8508	41.280	1.6252	0.630	0.0248	0.510	0.0201	0.250	0.0098	0.100	0.0039
12.4	23.800	0.9370	36.530	1.4382	1.140	0.0449	0.860	0.0339	0.250	0.0098	0.100	0.0039
14.4	28.100	1.1063	41.280	1.6252	1.140	0.0449	0.860	0.0339	0.250	0.0098	0.100	0.0039
16.4	32.050	1.2618	50.800	2.0000	1.140	0.0449	0.860	0.0339	0.250	0.0098	0.100	0.0039

Schematic Drawing

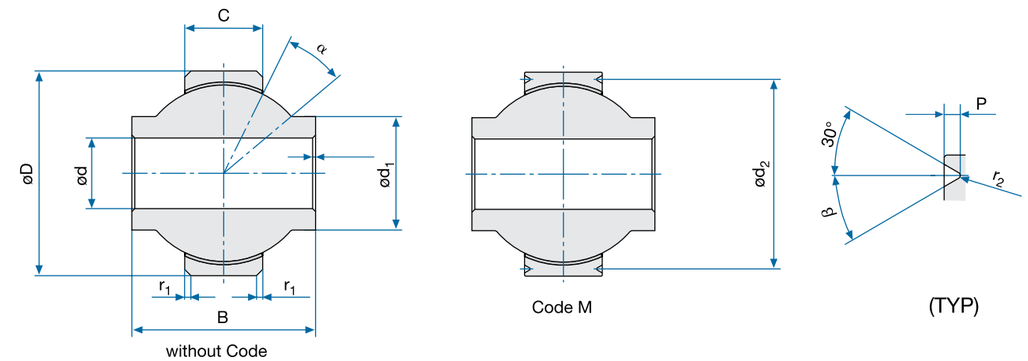

Specifications

FMGU... .4

Diameter Code	Static Radial Limit Load		Static Axial Limit Load		Starting Torque		α (REF)	ß	Weight	
	kN	lbs	kN	lbs	Nm	In.-lbs			g	lbs
3.4	18.2	4091.4	1.60	359.7	0.06 to 0.56	0.5 to 5.0	15°	20°	8	0.018
3.4A	18.2	4091.4	1.60	359.7	0.06 to 0.56	0.5 to 5.0	15°	20°	14	0.031
4.4	29.0	6519.2	2.45	550.8	0.11 to 0.56	1.0 to 5.0	24°	20°	18	0.040
4.4A	23.6	5305.3	1.96	440.6	0.11 to 0.56	1.0 to 5.0	12°	20°	14	0.031
5.4	29.0	6519.2	2.45	550.8	0.11 to 0.56	1.0 to 5.0	20°	30°	14	0.031
5.4A	29.0	6519.2	2.45	550.8	0.11 to 0.56	1.0 to 5.0	22°	30°	31	0.068
6.4	50.0	11240.0	5.60	1258.9	0.11 to 0.56	1.0 to 5.0	25°	30°	27	0.059
6.4A	56.0	12588.8	6.00	1348.8	0.11 to 0.56	1.0 to 5.0	22°	30°	27	0.059
7.4	66.7	14994.2	7.60	1708.5	0.11 to 0.56	1.0 to 5.0	22°	30°	45	0.099
8.4	73.5	16522.8	9.30	2090.6	0.11 to 0.56	1.0 to 5.0	10°	30°	50	0.110
8.4A	89.0	20007.2	11.10	2495.3	0.11 to 0.56	1.0 to 5.0	20°	30°	73	0.161
10.4	173.0	38890.4	33.50	7530.8	0.11 to 0.56	1.0 to 5.0	20°	30°	113	0.249
10.4A	236.0	53052.8	54.00	12139.2	0.11 to 0.56	1.0 to 5.0	30°	30°	254	0.559
12.4	208.0	46758.4	44.00	9891.2	0.11 to 0.56	1.0 to 5.0	20°	30°	191	0.420
14.4	222.4	49995.5	57.60	12948.5	0.23 to 0.68	1.0 to 5.0	18°	30°	195	0.429
16.4	380.0	85424.0	112.00	25177.6	0.23 to 0.68	1.0 to 5.0	21°	30°	358	0.7876

Designation

FMGU... .4
Number of Series

8.4
Diameter Code

M
Type of Mounting
None: Without Mounting Grooves
M: With Mounting Grooves

P
Surface Treatment
No Code: None
P: Outer Ring Cadmium Plated

Part Number Example
FMGU 8.4 M A P

Bearing Materials:

Liner
per SAE AS81820

Outer Ring
EN3161 / 1.4548 / 17-4PH H1150

Inner Ring
EN2030 / 1.3544.9 / AISI 440C

Technical Specification
SAE AS81820

** Inch dimensions are for reference only. | * Permanently marked in non-functional area.*

Contact

USA: KAMATICS CORPORATION 1330 Blue Hills Avenue Bloomfield, CT 06002 USA | **Tel:** +1 860 243 9704 | **E-mail:** KSB@kaman.com
GERMANY: RWG GERMANY GmbH Medbacher Weg 1 D-91315 Höchstadt a. d. Aisch | **Tel:** +49 (91 93) 50105 100 | **E-mail:** RWG@kaman.com

Spherical Bearings

EN2584 / FRE

- Self-Lubricating
- CRES

Specifications

Diameter Code	d		Δ dmp		D		Δ Dmp		B		C	
									–0.060	-0.0024	±0.100	±0.0039
	mm	Inch	mm	Inch	mm	Inch	mm	Inch	mm	Inch	mm	Inch
05	5.000	0.1969	-0.008	-0.0003	14.000	0.5512	-0.008	-0.0003	7.000	0.2756	5.500	0.2165
06	6.000	0.2362	-0.008	-0.0003	16.000	0.6299	-0.008	-0.0003	9.000	0.3543	5.500	0.2165
08	8.000	0.3150	-0.008	-0.0003	18.000	0.7087	-0.008	-0.0003	10.000	0.3937	7.000	0.2756
10	10.000	0.3937	-0.008	-0.0003	21.000	0.8268	-0.009	-0.0004	10.500	0.4134	8.000	0.3150
12	12.000	0.4724	-0.008	-0.0003	25.000	0.9843	-0.009	-0.0004	13.000	0.5118	10.000	0.3937
15	15.000	0.5906	-0.008	-0.0003	29.000	1.1417	-0.009	-0.0004	15.000	0.5906	12.000	0.4724
17	17.000	0.6693	-0.008	-0.0003	31.000	1.2205	-0.009	-0.0004	16.000	0.6299	13.500	0.5315
22	22.000	0.8661	-0.010	-0.0004	40.000	1.5748	-0.011	-0.0004	22.000	0.8661	18.000	0.7087
25	25.000	0.9843	-0.010	-0.0004	45.000	1.7717	-0.011	-0.0004	25.000	0.9843	20.000	0.7874
30	30.000	1.1811	-0.010	-0.0004	51.000	2.0079	-0.013	-0.0005	28.000	1.1024	24.000	0.9449
35	35.000	1.3780	-0.012	-0.0005	57.000	2.2441	-0.013	-0.0005	31.000	1.2205	26.000	1.0236
40	40.000	1.5748	-0.012	-0.0005	64.000	2.5197	-0.013	-0.0005	34.000	1.3386	29.000	1.1417
45	45.000	1.7717	-0.012	-0.0005	72.000	2.8346	-0.013	-0.0005	37.000	1.4567	32.000	1.2598
50	50.000	1.9685	-0.012	-0.0005	80.000	3.1496	-0.015	-0.0006	41.000	1.6142	34.000	1.3386

Diameter Code	d_1		d_2		r_2		r_4 x 45°		P	
			+0.100	+0.0039			+0.300	+0.0118		
	mm	Inch	mm	Inch	mm	Inch	mm	Inch	mm	Inch
05	8.600	0.3386	12.200	0.4803	0.2 to 0.3	0.0079 to 0.0118	0.100	0.0039	0.5 to 0.7	0.020 to 0.028
06	9.000	0.3543	14.200	0.5591	0.2 to 0.3	0.0079 to 0.0118	0.100	0.0039	0.5 to 0.7	0.020 to 0.028
08	10.200	0.4016	16.200	0.6378	0.2 to 0.3	0.0079 to 0.0118	0.100	0.0039	0.5 to 0.7	0.020 to 0.028
10	11.900	0.4685	18.400	0.7244	0.3 to 0.4	0.0118 to 0.0157	0.100	0.0039	0.7 to 0.9	0.028 to 0.035
12	15.000	0.5906	22.400	0.8819	0.3 to 0.4	0.0118 to 0.0157	0.100	0.0039	0.7 to 0.9	0.028 to 0.035
15	20.500	0.8071	26.400	1.0394	0.3 to 0.4	0.0118 to 0.0157	0.100	0.0039	0.7 to 0.9	0.028 to 0.035
17	21.700	0.8543	28.400	1.1181	0.3 to 0.4	0.0118 to 0.0157	0.100	0.0039	0.7 to 0.9	0.028 to 0.035
22	27.100	1.0669	36.800	1.4488	0.3 to 0.4	0.0118 to 0.0157	0.100	0.0039	1.2 to 1.4	0.047 to 0.055
25	29.600	1.1654	41.800	1.6457	0.3 to 0.4	0.0118 to 0.0157	0.100	0.0039	1.2 to 1.4	0.047 to 0.055
30	35.500	1.3976	47.800	1.8819	0.3 to 0.4	0.0118 to 0.0157	0.100	0.0039	1.2 to 1.4	0.047 to 0.055
35	41.700	1.6417	53.800	2.1181	0.3 to 0.4	0.0118 to 0.0157	0.100	0.0039	1.2 to 1.4	0.047 to 0.055
40	47.000	1.8504	60.800	2.3937	0.3 to 0.4	0.0118 to 0.0157	0.100	0.0039	1.2 to 1.4	0.047 to 0.055
45	52.200	2.0551	68.800	2.7087	0.3 to 0.4	0.0118 to 0.0157	0.100	0.0039	1.2 to 1.4	0.047 to 0.055
50	59.200	2.3307	76.800	3.0236	0.3 to 0.4	0.0118 to 0.0157	0.100	0.0039	1.2 to 1.4	0.047 to 0.055

Schematic Drawing

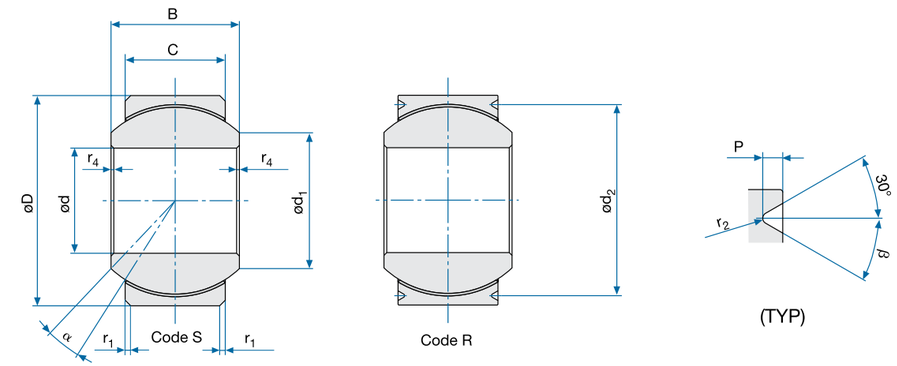

Specifications

EN2584 / FRE

Diameter Code	r_1 x 45°		Starting Torque		Static Radial Limit Load		Static Axial Limit Load		α (min.)	ß	Weight	
	mm	Inch	Nm	In.-lbs	kN	lbs	kN	lbs			g	lbs
05	0.5 to 0.8	0.020 to 0.031	0.08 to 0.5	0.7 to 4.4	20.5	4608.4	1.9	427.1	9°	20°	7	0.015
06	0.5 to 0.8	0.020 to 0.031	0.08 to 0.5	0.7 to 4.4	29.2	6564.2	3.5	786.8	14°	20°	9	0.020
08	0.5 to 0.8	0.020 to 0.031	0.08 to 0.5	0.7 to 4.4	37.0	8317.6	3.9	876.7	15°	20°	12	0.026
10	0.5 to 0.8	0.020 to 0.031	0.12 to 0.80	1.1 to 7.1	47.2	10610.6	6.5	1461.2	11°	30°	20	0.044
12	0.5 to 0.8	0.020 to 0.031	0.12 to 0.80	1.1 to 7.1	78.1	17556.9	11.7	2630.2	10°	30°	32	0.070
15	0.5 to 0.8	0.020 to 0.031	0.12 to 0.80	1.1 to 7.1	121.9	27403.1	18.0	4046.4	8°	30°	50	0.110
17	0.5 to 0.8	0.020 to 0.031	0.12 to 0.80	1.1 to 7.1	148.3	33337.8	24.3	5462.6	7°	30°	59	0.130
22	0.6 to 1.0	0.024 to 0.039	0.25 to 1.0	2.2 to 8.8	268.6	60381.3	45.5	10228.4	8°	30°	126	0.277
25	0.6 to 1.0	0.024 to 0.039	0.25 to 1.0	2.2 to 8.8	324.7	72992.6	55.9	12566.3	8°	30°	185	0.407
30	0.6 to 1.0	0.024 to 0.039	0.40 to 2.0	3.5 to 17.7	433.4	97428.3	77.8	17489.4	6°	30°	300	0.660
35	0.8 to 1.2	0.031 to 0.047	0.40 to 2.0	3.5 to 17.7	543.4	122156.3	92.2	20726.6	7°	30°	340	0.748
40	0.8 to 1.2	0.031 to 0.047	0.60 to 3.5	5.3 to 31.0	680.9	153066.3	113.4	25492.3	6°	30°	460	1.012
45	0.8 to 1.2	0.031 to 0.047	0.60 to 3.5	5.3 to 31.0	833.9	187460.7	135.9	30550.3	5°	30°	630	1.386
50	0.8 to 1.2	0.031 to 0.047	0.60 to 3.5	5.3 to 31.0	981.4	220618.7	154.2	34664.2	7°	30°	870	1.914

Designation

EN2584
Number of Series

10
Diameter Code

A
Bonded Liner Technology

R
Type of Mounting
R: Without Mounting Grooves
S: With Mounting Grooves

P
Surface Treatment
No Code: None
T: Passivated
P: Chromium Plated Ball

Part Number Example
EN2584 R 10 P A

FRE
Number of Series

10
Diameter Code

R
Type of Mounting
R: With Mounting Grooves
S: Without Mounting Grooves

P
Surface Treatment
No Code: None
P: Chromium Plated Ball

Part Number Example
FRE 10 R P

Bearing Materials:

Liner
per EN2755

Outer Ring
EN3161 / 1.4548 / 17-4PH H1150

Inner Ring
EN2030 / 1.3544.9 / AISI 440C

Technical Specification
EN2755

** Inch dimensions are for reference only. | * Permanently marked in non-functional area.*

Contact

USA: KAMATICS CORPORATION 1330 Blue Hills Avenue Bloomfield, CT 06002 USA | **Tel:** +1 860 243 9704 | **E-mail:** KSB@kaman.com
GERMANY: RWG GERMANY GmbH Medbacher Weg 1 D-91315 Höchstadt a. d. Aisch | **Tel:** +49 (91 93) 50105 100 | **E-mail:** RWG@kaman.com

Spherical Bearings

EN2585 / FRL

- Self-Lubricating
- CRES

Specifications

Diameter Code	d		Δ dmp		D		Δ Dmp		B		C	
									-0.060	-0.0024	±0.100	±0.0039
	mm	Inch	mm	Inch	mm	Inch	mm	Inch	mm	Inch	mm	Inch
05	5.000	0.1969	-0.008	-0.0003	16.000	0.6299	-0.008	-0.0003	11.000	0.4331	8.500	0.3346
06	6.000	0.2362	-0.008	-0.0003	16.000	0.6299	-0.008	-0.0003	11.000	0.4331	8.500	0.3346
08	8.000	0.3150	-0.008	-0.0003	18.000	0.7087	-0.008	-0.0003	11.000	0.4331	8.000	0.3150
10	10.000	0.3937	-0.008	-0.0003	21.000	0.8268	-0.009	-0.0004	12.500	0.4921	10.000	0.3937
12	12.000	0.4724	-0.008	-0.0003	26.000	1.0236	-0.009	-0.0004	16.000	0.6299	13.000	0.5118
15	15.000	0.5906	-0.008	-0.0003	29.000	1.1417	-0.009	-0.0004	17.000	0.6693	13.500	0.5315
17	17.000	0.6693	-0.008	-0.0003	30.000	1.1811	-0.009	-0.0004	18.000	0.7087	14.500	0.5709
20	20.000	0.7874	-0.010	-0.0004	35.000	1.3780	-0.011	-0.0004	20.000	0.7874	16.000	0.6299
25	25.000	0.9843	-0.010	-0.0004	54.000	2.1260	-0.013	-0.0005	32.000	1.2598	26.000	1.0236
30	30.000	1.1811	-0.010	-0.0004	60.000	2.3622	-0.013	-0.0005	34.000	1.3386	28.000	1.1024
35	35.000	1.3780	-0.012	-0.0005	65.000	2.5591	-0.013	-0.0005	36.000	1.4173	29.000	1.1417
40	40.000	1.5748	-0.012	-0.0005	68.000	2.6772	-0.013	-0.0005	38.000	1.4961	31.000	1.2205
45	45.000	1.7717	-0.012	-0.0005	76.000	2.9921	-0.013	-0.0005	41.000	1.6142	33.000	1.2992
50	50.000	1.9685	-0.012	-0.0005	82.000	3.2283	-0.015	-0.0006	44.000	1.7323	35.000	1.3780
55	55.000	2.1654	-0.012	-0.0005	96.000	3.7795	-0.015	-0.0006	52.000	2.0472	40.000	1.5748

Diameter Code	d_1		d_2		r_1 x 45°		r_2		r_4 x 45°	
			+0.100	+0.0039					+0.300	+0.0118
	mm	Inch	mm	Inch	mm	Inch	mm	Inch	mm	Inch
05	7.700	0.3031	14.200	0.5591	0.5 to 0.8	0.020 to 0.031	0.2 to 0.3	0.0079 to 0.0118	0.100	0.0039
06	7.700	0.3031	14.200	0.5591	0.5 to 0.8	0.020 to 0.031	0.2 to 0.3	0.0079 to 0.0118	0.100	0.0039
08	10.300	0.4055	16.200	0.6378	0.5 to 0.8	0.020 to 0.031	0.2 to 0.3	0.0079 to 0.0118	0.100	0.0039
10	12.200	0.4803	18.400	0.7244	0.5 to 0.8	0.020 to 0.031	0.3 to 0.4	0.0118 to 0.0157	0.100	0.0039
12	15.500	0.6102	23.400	0.9213	0.5 to 0.8	0.020 to 0.031	0.3 to 0.4	0.0118 to 0.0157	0.100	0.0039
15	18.900	0.7441	26.400	1.0394	0.5 to 0.8	0.020 to 0.031	0.3 to 0.4	0.0118 to 0.0157	0.100	0.0039
17	20.100	0.7913	27.400	1.0787	0.5 to 0.8	0.020 to 0.031	0.3 to 0.4	0.0118 to 0.0157	0.100	0.0039
20	23.500	0.9252	31.800	1.2520	0.5 to 0.8	0.020 to 0.031	0.3 to 0.4	0.0118 to 0.0157	0.100	0.0039
25	35.300	1.3898	50.800	2.0000	0.6 to 1.0	0.024 to 0.039	0.3 to 0.4	0.0118 to 0.0157	0.100	0.0039
30	40.900	1.6102	56.800	2.2362	0.8 to 1.2	0.031 to 0.047	0.3 to 0.4	0.0118 to 0.0157	0.100	0.0039
35	45.500	1.7913	61.800	2.4331	0.8 to 1.2	0.031 to 0.047	0.3 to 0.4	0.0118 to 0.0157	0.100	0.0039
40	47.000	1.8504	64.800	2.5512	0.8 to 1.2	0.031 to 0.047	0.3 to 0.4	0.0118 to 0.0157	0.100	0.0039
45	54.100	2.1299	72.800	2.8661	0.8 to 1.2	0.031 to 0.047	0.3 to 0.4	0.0118 to 0.0157	0.100	0.0039
50	60.300	2.3740	78.800	3.1024	0.8 to 1.2	0.031 to 0.047	0.3 to 0.4	0.0118 to 0.0157	0.100	0.0039
55	63.400	2.4961	92.800	3.6535	0.8 to 1.2	0.031 to 0.047	0.3 to 0.4	0.0118 to 0.0157	0.100	0.0039

Schematic Drawing

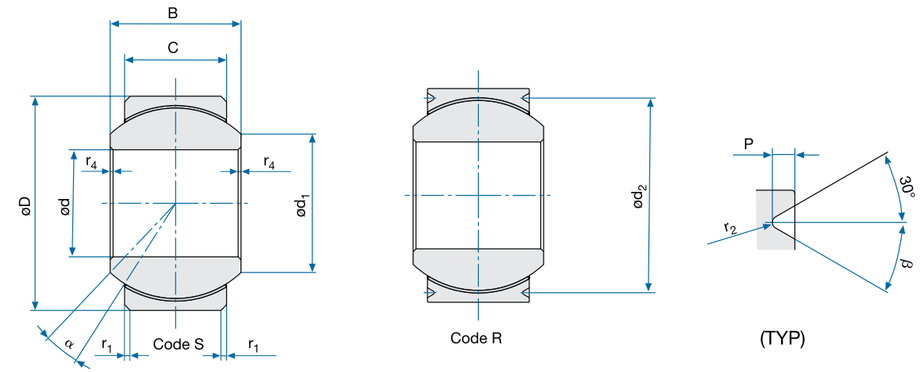

Specifications

EN2585 / FRL

Diameter Code	P		Starting Torque		Static Radial Limit Load		Static Axial Limit Load		α (min.)	ß	Weight	
	mm	Inch	Nm	In.-lbs	kN	lbs	kN	lbs			g	lbs
05	0.5 to 0.7	0.020 to 0.028	0.08 to 0.50	0.71 to 4.4	42.6	9576.5	7.2	1618.6	15°	20°	16	0.035
06	0.5 to 0.7	0.020 to 0.028	0.08 to 0.50	0.71 to 4.4	42.6	9576.5	7.2	1618.6	15°	20°	16	0.035
08	0.5 to 0.7	0.020 to 0.028	0.12 to 0.80	1.10 to 7.10	45.7	10273.4	6.4	1438.7	14°	20°	17	0.037
10	0.7 to 0.9	0.028 to 0.035	0.12 to 0.80	1.10 to 7.10	68.7	15443.8	11.7	2630.2	10°	30°	27	0.059
12	0.7 to 0.9	0.028 to 0.035	0.12 to 0.80	1.10 to 7.10	116.4	26166.7	21.5	4833.2	10°	30°	49	0.108
15	0.7 to 0.9	0.028 to 0.035	0.12 to 0.80	1.10 to 7.10	139.0	31247.2	24.1	5417.7	9°	30°	62	0.136
17	0.7 to 0.9	0.028 to 0.035	0.12 to 0.80	1.10 to 7.10	159.1	35765.7	29.0	6519.2	9°	30°	69	0.152
20	1.2 to 1.4	0.047 to 0.055	0.12 to 0.80	1.10 to 7.10	207.5	46646.0	36.0	8092.8	8°	30°	104	0.229
25	1.2 to 1.4	0.047 to 0.055	0.25 to 1.00	2.21 to 8.85	496.6	111635.7	93.2	20951.4	9°	30°	445	0.979
30	1.2 to 1.4	0.047 to 0.055	0.40 to 2.00	3.54 to 17.70	587.5	132070.0	109.6	24638.1	8°	30°	480	1.056
35	1.2 to 1.4	0.047 to 0.055	0.40 to 2.00	3.54 to 17.70	666.0	149716.8	117.6	26436.5	8°	30°	565	1.243
40	1.2 to 1.4	0.047 to 0.055	0.60 to 3.50	5.31 to 31.0	745.6	167610.9	136.6	30707.7	8°	30°	600	1.320
45	1.2 to 1.4	0.047 to 0.055	0.60 to 3.50	5.31 to 31.0	895.9	201398.3	155.6	34978.9	8°	30°	800	1.760
50	1.2 to 1.4	0.047 to 0.055	0.60 to 3.50	5.31 to 31.0	1024.7	230352.6	176.2	39609.8	8°	30°	970	2.134
55	1.3 to 1.5	0.051 to 0.059	0.60 to 3.50	5.31 to 31.0	1298.7	291947.8	221.2	49725.8	10°	30°	1580	2.134

Designation

EN2585
Number of Standard

10
Diameter Code

A
Bonded Liner Technology

R
Type of Mounting
R: With Mounting Grooves
S: Without Mounting Grooves

P
Surface Treatment
No Code: None
P: Chromium Plated Ball

Part Number Example
EN2585 R 10 P T A

FRL
Number of Series

10
Diameter Code

R
Type of Mounting
R: With Mounting Grooves
S: Without Mounting Grooves

P
Surface Treatment
No Code: None
P: Chromium Plated Ball

Part Number Example
FRL 10 R P

Bearing Materials:

Liner
per EN2755

Outer Ring
EN3161 / 1.4548 / 17-4PH H1150

Inner Ring
EN2030 / 1.3544.9 / AISI 440C

Technical Specification
EN2755

** Inch dimensions are for reference only. | * Permanently marked in non-functional area.*

Contact

USA: KAMATICS CORPORATION 1330 Blue Hills Avenue Bloomfield, CT 06002 USA | **Tel:** +1 860 243 9704 | **E-mail:** KSB@kaman.com
GERMANY: RWG GERMANY GmbH Medbacher Weg 1 D-91315 Höchstadt a. d. Aisch | **Tel:** +49 (91 93) 50105 100 | **E-mail:** RWG@kaman.com

Spherical Bearings

EN3048

- Self-Lubricating
- CRES

Specifications

Diameter Code	d		Δ dmp		D		Δ Dmp		B		C	
									+0.060 −0.060	+0.0024 −0.0024	±0.100	±0.0039
	mm	Inch	mm	Inch	mm	Inch	mm	Inch	mm	Inch	mm	Inch
12	12.000	0.4724	-0.008	-0.0003	22.000	0.8661	-0.009	-0.0004	10.000	0.3937	7.000	0.2756
15	15.000	0.5906	-0.008	-0.0003	26.000	1.0236	-0.009	-0.0004	12.000	0.4724	9.000	0.3543
15a	15.000	0.5906	-0.008	-0.0003	26.000	1.0236	-0.009	-0.0004	12.000	0.4724	9.000	0.3543
17	17.000	0.6693	-0.008	-0.0003	30.000	1.1811	-0.009	-0.0004	14.000	0.5512	10.000	0.3937
17a	17.000	0.6693	-0.008	-0.0003	30.000	1.1811	-0.009	-0.0004	14.000	0.5512	10.000	0.3937
20	20.000	0.7874	-0.010	-0.0004	35.000	1.3780	-0.011	-0.0004	16.000	0.6299	12.000	0.4724
20a	20.000	0.7874	-0.010	-0.0004	35.000	1.3780	-0.011	-0.0004	16.000	0.6299	12.000	0.4724
25	25.000	0.9843	-0.010	-0.0004	42.000	1.6535	-0.011	-0.0004	20.000	0.7874	16.000	0.6299
25a	25.000	0.9843	-0.010	-0.0004	42.000	1.6535	-0.011	-0.0004	20.000	0.7874	16.000	0.6299
30	30.000	1.1811	-0.010	-0.0004	47.000	1.8504	-0.011	-0.0004	22.000	0.8661	18.000	0.7087
30a	30.000	1.1811	-0.010	-0.0004	47.000	1.8504	-0.011	-0.0004	22.000	0.8661	18.000	0.7087
35	35.000	1.3780	-0.012	-0.0005	55.000	2.1654	-0.013	-0.0005	25.000	0.9843	20.000	0.7874
40	40.000	1.5748	-0.012	-0.0005	62.000	2.4409	-0.013	-0.0005	28.000	1.1024	22.000	0.8661
45	45.000	1.7717	-0.012	-0.0005	68.000	2.6772	-0.013	-0.0005	32.000	1.2598	25.000	0.9843
50	50.000	1.9685	-0.012	-0.0005	75.000	2.9528	-0.013	-0.0005	35.000	1.3780	28.000	1.1024

Diameter Code	d_1 (min.)		d_2		r_1 x 45°		P		r_4 x 45°		α (min.)
			+0.100	+0.0039			-0.200	-0.0079			
	mm	Inch	mm	Inch	mm	Inch	mm	Inch	mm	Inch	
12	14.300	0.5630	20.200	0.7953	0.5 to 0.8	0.020 to 0.030	0.700	0.0276	0.1 to 0.4	0.0040 to 0.0160	11°
15	18.700	0.7362	24.200	0.9528	0.5 to 0.8	0.020 to 0.030	0.700	0.0276	0.1 to 0.4	0.0040 to 0.0160	9°
15a	18.700	0.7362	24.000	0.9449	0.5 to 0.8	0.020 to 0.030	0.700	0.0276	0.1 to 0.4	0.0040 to 0.0160	9°
17	21.200	0.8346	28.200	1.1102	0.5 to 0.8	0.020 to 0.030	0.700	0.0276	0.1 to 0.4	0.0040 to 0.0160	10°
17a	21.200	0.8346	28.000	1.1024	0.5 to 0.8	0.020 to 0.030	0.700	0.0276	0.1 to 0.4	0.0040 to 0.0160	10°
20	24.900	0.9803	33.200	1.3071	0.6 to 1.0	0.024 to 0.039	0.700	0.0276	0.1 to 0.4	0.0040 to 0.0160	9°
20a	24.900	0.9803	33.000	1.2992	0.6 to 1.0	0.024 to 0.039	0.700	0.0276	0.1 to 0.4	0.0040 to 0.0160	9°
25	30.000	1.1811	39.400	1.5512	0.6 to 1.0	0.024 to 0.039	0.900	0.0354	0.1 to 0.4	0.0040 to 0.0160	7°
25a	30.000	1.1811	38.800	1.5276	0.6 to 1.0	0.024 to 0.039	0.900	0.0354	0.1 to 0.4	0.0040 to 0.0160	7°
30	34.300	1.3504	44.400	1.7480	0.6 to 1.0	0.024 to 0.039	0.900	0.0354	0.1 to 0.4	0.0040 to 0.0160	6°
30a	34.300	1.3504	43.800	1.7244	0.6 to 1.0	0.024 to 0.039	0.900	0.0354	0.1 to 0.4	0.0040 to 0.0160	6°
35	40.500	1.5945	51.800	2.0394	0.8 to 1.2	0.031 to 0.047	1.400	0.0551	0.1 to 0.4	0.0040 to 0.0160	7°
40	45.000	1.7717	58.800	2.3150	0.8 to 1.2	0.031 to 0.047	1.400	0.0551	0.1 to 0.4	0.0040 to 0.0160	7°
45	51.300	2.0197	64.800	2.5512	0.8 to 1.2	0.031 to 0.047	1.400	0.0551	0.1 to 0.4	0.0040 to 0.0160	7°
50	58.200	2.2913	71.800	2.8268	0.8 to 1.2	0.031 to 0.047	1.400	0.0551	0.1 to 0.4	0.0040 to 0.0160	7°

Schematic Drawing

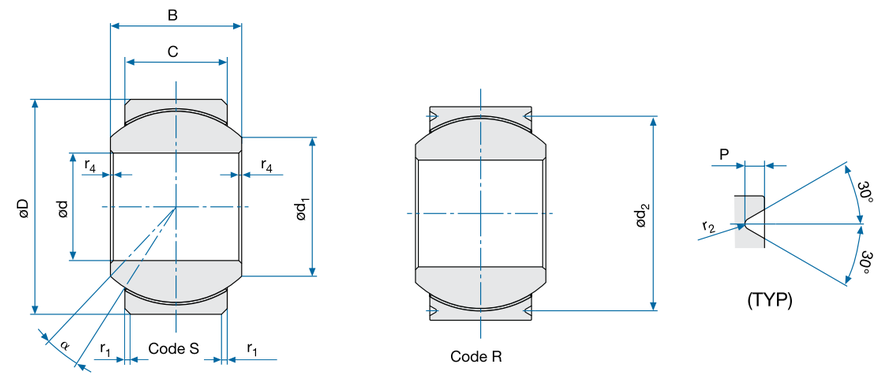

Specifications

EN3048

Diameter Code	r_2		Starting Torque		Static Radial Limit Load		Static Axial Limit Load		Weight	
	+0.100	+0.0039								
	mm	Inch	Nm	In.-lbs	kN	lbs	kN	lbs	g	lbs
12	0.200	0.0079	0.12 to 0.80	1.0 to 7.0	46.4	10430.7	3.7	831.8	17	0.037
15	0.200	0.0079	0.12 to 0.80	1.0 to 7.0	79.5	17871.6	8.0	1798.4	26	0.057
15a	0.200	0.0079	0.12 to 0.80	1.0 to 7.0	79.5	17871.6	8.0	1798.4	26	0.057
17	0.200	0.0079	0.12 to 0.80	1.0 to 7.0	102.6	23064.5	10.6	2382.9	40	0.088
17a	0.200	0.0079	0.12 to 0.80	1.0 to 7.0	102.6	23064.5	10.6	2382.9	40	0.088
20	0.200	0.0079	0.12 to 0.80	1.0 to 7.0	147.4	33135.5	17.0	3821.6	65	0.143
20a	0.200	0.0079	0.12 to 0.80	1.0 to 7.0	147.4	33135.5	17.0	3821.6	65	0.143
25	0.300	0.0118	0.25 to 1.00	2.2 to 8.8	221.7	49838.2	28.7	6451.8	115	0.253
25a	0.300	0.0118	0.25 to 1.00	2.2 to 8.8	221.7	49838.2	28.7	6451.8	115	0.253
30	0.300	0.0118	0.40 to 2.00	3.5 to 17.7	285.6	64202.9	38.2	8587.4	160	0.352
30a	0.300	0.0118	0.40 to 2.00	3.5 to 17.7	285.6	64202.9	38.2	8587.4	160	0.352
35	0.300	0.0118	0.40 to 2.00	3.5 to 17.7	374.5	84187.6	48.7	10947.8	229	0.504
40	0.300	0.0118	0.60 to 2.70	5.3 to 23.9	462.7	104015.0	60.7	13645.4	315	0.693
45	0.300	0.0118	0.60 to 2.70	5.3 to 23.9	605.8	136183.8	81.6	18343.7	460	1.012
50	0.300	0.0118	0.60 to 2.70	5.3 to 23.9	768.0	172646.4	105.6	23738.9	560	1.012

Designation

EN3048
Number of Standard

R
Type of Mounting
R: With Mounting Grooves
S: Without Mounting Grooves

12
Diameter Code

P
Surface Treatment Ball
No Code: None
P: Chromium Plated

T
Surface Treatment Bearing
No Code: None
T: Passivated

A
Bonded Liner Technology

1
Deviating Mounting Groove Dimensions

Part Number Example
EN3048 R 12 P T A 1

Bearing Materials:

Liner
per EN2755

Outer Ring
EN3161 / 1.4548 / 17-4PH H1150

Inner Ring
EN2030 / 1.3544.9 / AISI 440C

Technical Specification
EN2755

NOTE: little "a" means "Code 1"

** Inch dimensions are for reference only. | * Permanently marked in non-functional area.*

Contact

USA: KAMATICS CORPORATION 1330 Blue Hills Avenue Bloomfield, CT 06002 USA | **Tel:** +1 860 243 9704 | **E-mail:** KSB@kaman.com
GERMANY: RWG GERMANY GmbH Medbacher Weg 1 D-91315 Höchstadt a. d. Aisch | **Tel:** +49 (91 93) 50105 100 | **E-mail:** RWG@kaman.com

Spherical Bearings

EN4037

- Self-Lubricating
- CRES

Specifications

Diameter Code	d		Δ dmp		D		Δ Dmp		B		C	
									+0.060 −0.060	+0.0024 −0.0024	±0.100	±0.0039
	mm	Inch	mm	Inch	mm	Inch	mm	Inch	mm	Inch	mm	Inch
12	12.000	0.4724	-0.008	-0.0003	22.000	0.8661	-0.009	-0.0004	10.000	0.3937	7.000	0.2756
15	15.000	0.5906	-0.008	-0.0003	26.000	1.0236	-0.009	-0.0004	12.000	0.4724	9.000	0.3543
17	17.000	0.6693	-0.008	-0.0003	30.000	1.1811	-0.009	-0.0004	14.000	0.5512	10.000	0.3937
20	20.000	0.7874	-0.010	-0.0004	35.000	1.3780	-0.011	-0.0004	16.000	0.6299	12.000	0.4724
25	25.000	0.9843	-0.010	-0.0004	42.000	1.6535	-0.011	-0.0004	20.000	0.7874	16.000	0.6299
30	30.000	1.1811	-0.010	-0.0004	47.000	1.8504	-0.011	-0.0004	22.000	0.8661	18.000	0.7087
35	35.000	1.3780	-0.012	-0.0005	55.000	2.1654	-0.013	-0.0005	25.000	0.9843	20.000	0.7874
40	40.000	1.5748	-0.012	-0.0005	62.000	2.4409	-0.013	-0.0005	28.000	1.1024	22.000	0.8661
45	45.000	1.7717	-0.012	-0.0005	68.000	2.6772	-0.013	-0.0005	32.000	1.2598	25.000	0.9843
50	50.000	1.9685	-0.012	-0.0005	75.000	2.9528	-0.013	-0.0005	35.000	1.3780	28.000	1.1024

Diameter Code	d_1 (min.)		d_2		r_1 x 45°		Δ $r_1$mp		r_2		r_4 x 45°	
			+0.100	+0.0039					+0.100	+0.0039	+0.300	+0.0118
	mm	Inch	mm	Inch	mm	Inch	mm	Inch	mm	Inch	mm	Inch
12	14.300	0.5630	20.200	0.7953	0.500	0.0197	+0.300	+0.0118	0.200	0.0079	0.100	0.0039
15	18.700	0.7362	24.200	0.9528	0.500	0.0197	+0.300	+0.0118	0.200	0.0079	0.100	0.0039
17	21.200	0.8346	28.200	1.1102	0.500	0.0197	+0.300	+0.0118	0.200	0.0079	0.100	0.0039
20	24.900	0.9803	33.200	1.3071	0.600	0.0236	+0.400	+0.0157	0.200	0.0079	0.100	0.0039
25	30.000	1.1811	39.400	1.5512	0.600	0.0236	+0.400	+0.0157	0.300	0.0118	0.100	0.0039
30	34.300	1.3504	44.400	1.7480	0.600	0.0236	+0.400	+0.0157	0.300	0.0118	0.100	0.0039
35	40.500	1.5945	51.800	2.0394	0.800	0.0315	+0.400	+0.0157	0.300	0.0118	0.100	0.0039
40	45.000	1.7717	58.800	2.3150	0.800	0.0315	+0.400	+0.0157	0.300	0.0118	0.100	0.0039
45	51.300	2.0197	64.800	2.5512	0.800	0.0315	+0.400	+0.0157	0.300	0.0118	0.100	0.0039
50	58.200	2.2913	71.800	2.8268	0.800	0.0315	+0.400	+0.0157	0.300	0.0118	0.100	0.0039

Schematic Drawing

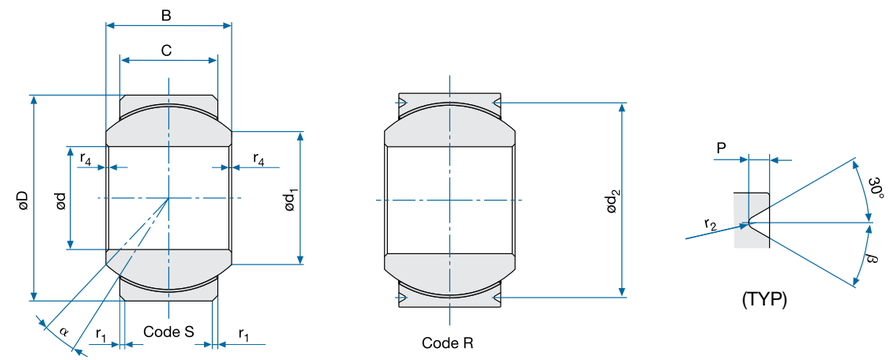

Specifications

EN4037

Diameter Code	P		α	ß	Starting Torque		Static Radial Limit Load		Static Axial Limit Load		Weight	
	-0.200	-0.0079										
	mm	Inch			Nm	In.-lbs	kN	lbs	kN	lbs	g	lbs
12	0.700	0.0276	11°	20°	0.008 to 0.10	0.07 to 0.89	46.4	10430.7	3.7	831.8	17	0.037
15	0.700	0.0276	9°	20°	0.01 to 0.12	0.09 to 1.06	79.5	17871.6	8.0	1798.4	26	0.057
17	0.700	0.0276	10°	20°	0.01 to 0.12	0.09 to 1.06	102.6	23064.5	10.6	2382.9	40	0.088
20	0.700	0.0276	9°	30°	0.01 to 0.12	0.09 to 1.06	147.4	33135.5	17.0	3821.6	65	0.143
25	0.900	0.0354	7°	30°	0.015 to 0.25	0.13 to 2.21	221.7	49838.2	28.7	6451.8	115	0.253
30	0.900	0.0354	6°	30°	0.02 to 0.40	0.18 to 3.54	285.6	64202.9	38.2	8587.4	160	0.352
35	1.400	0.0551	7°	30°	0.02 to 0.40	0.18 to 3.54	374.5	84187.6	48.7	10947.8	229	0.504
40	1.400	0.0551	7°	30°	0.025 to 0.50	0.22 to 4.43	462.7	104015.0	60.7	13645.4	315	0.693
45	1.400	0.0551	7°	30°	0.30 to 0.60	2.66 to 5.32	605.8	136183.8	81.6	18343.7	460	1.012
50	1.400	0.0551	7°	30°	0.30 to 0.60	2.66 to 5.32	768.0	172646.4	105.6	23738.9	560	1.232

Designation

EN4037
Number of Standard

R
Type of Mounting
R: With Mounting Grooves
P: Without Mounting Grooves

T
Surface Treatment Bearing
No Code: None
T: Passivated

12
Diameter Code

Part Number Example
EN4037 R 12 T

Bearing Materials:

Liner
per EN2755

Outer Ring
EN3161 / 1.4548 / 17-4PH H1150

Inner Ring
EN2030 / 1.3544.9 / AISI 440C

Technical Specification
EN2755

** Inch dimensions are for reference only. | * Permanently marked in non-functional area.*

Contact

USA: KAMATICS CORPORATION 1330 Blue Hills Avenue Bloomfield, CT 06002 USA | **Tel:** +1 860 243 9704 | **E-mail:** KSB@kaman.com
GERMANY: RWG GERMANY GmbH Medbacher Weg 1 D-91315 Höchstadt a. d. Aisch | **Tel:** +49 (91 93) 50105 100 | **E-mail:** RWG@kaman.com

Spherical Bearings

EN4038

- Self-Lubricating
- CRES

Specifications

Diameter Code	d		Δ dmp		D		Δ Dmp		B		C	
									+0.060 −0.060	+0.0024 −0.0024	±0.100	±0.0039
	mm	Inch	mm	Inch	mm	Inch	mm	Inch	mm	Inch	mm	Inch
05	5.000	0.1969	-0.008	-0.0003	14.000	0.5512	-0.008	-0.0003	7.000	0.2756	5.500	0.2165
06	6.000	0.2362	-0.008	-0.0003	16.000	0.6299	-0.008	-0.0003	9.000	0.3543	6.500	0.2559
08	8.000	0.3150	-0.008	-0.0003	18.000	0.7087	-0.008	-0.0003	10.000	0.3937	7.000	0.2756
10	10.000	0.3937	-0.008	-0.0003	21.000	0.8268	-0.009	-0.0004	10.500	0.4134	8.000	0.3150
12	12.000	0.4724	-0.008	-0.0003	25.000	0.9843	-0.009	-0.0004	13.000	0.5118	10.000	0.3937
15	15.000	0.5906	-0.008	-0.0003	29.000	1.1417	-0.009	-0.0004	15.000	0.5906	12.000	0.4724
17	17.000	0.6693	-0.008	-0.0003	31.000	1.2205	-0.011	-0.0004	16.000	0.6299	13.500	0.5315
22	22.000	0.8661	-0.010	-0.0004	40.000	1.5748	-0.011	-0.0004	22.000	0.8661	18.000	0.7087
25	25.000	0.9843	-0.010	-0.0004	45.000	1.7717	-0.011	-0.0004	25.000	0.9843	20.000	0.7874
30	30.000	1.1811	-0.010	-0.0004	51.000	2.0079	-0.013	-0.0005	28.000	1.1024	24.000	0.9449
35	35.000	1.3780	-0.012	-0.0005	57.000	2.2441	-0.013	-0.0005	31.000	1.2205	26.000	1.0236
40	40.000	1.5748	-0.012	-0.0005	64.000	2.5197	-0.013	-0.0005	34.000	1.3386	29.000	1.1417
45	45.000	1.7717	-0.012	-0.0005	72.000	2.8346	-0.013	-0.0005	37.000	1.4567	32.000	1.2598
50	50.000	1.9685	-0.012	-0.0005	80.000	3.1496	-0.015	-0.0006	41.000	1.6142	34.000	1.3386

Diameter Code	d_1		d_2		r_1 x 45°		r_2		r_4 x 45°		α	β
			+0.100	+0.0039					+0.300	+0.0118		
	mm	Inch	mm	Inch	mm	Inch	mm	Inch	mm	Inch		
05	8.600	0.3386	12.200	0.4803	0.300 to 0.600	0.0118 to 0.0236	0.200 to 0.300	0.01 to 0.01	0.100	0.0039	9°	20°
06	9.000	0.3543	14.200	0.5591	0.300 to 0.600	0.0118 to 0.0236	0.200 to 0.300	0.01 to 0.01	0.100	0.0039	14°	20°
08	10.200	0.4016	16.200	0.6378	0.300 to 0.600	0.0118 to 0.0236	0.200 to 0.300	0.01 to 0.01	0.100	0.0039	15°	20°
10	11.900	0.4685	18.400	0.7244	0.500 to 0.800	0.0197 to 0.0315	0.300 to 0.400	0.01 to 0.01	0.100	0.0039	11°	30°
12	15.000	0.5906	22.400	0.8819	0.500 to 0.800	0.0197 to 0.0315	0.300 to 0.400	0.01 to 0.01	0.100	0.0039	10°	30°
15	20.500	0.8071	26.400	1.0394	0.500 to 0.800	0.0197 to 0.0315	0.300 to 0.400	0.01 to 0.01	0.100	0.0039	8°	30°
17	21.700	0.8543	28.400	1.1181	0.600 to 1.000	0.0236 to 0.0394	0.300 to 0.400	0.01 to 0.01	0.100	0.0039	7°	30°
22	27.100	1.0669	36.800	1.4488	0.600 to 1.000	0.0236 to 0.0394	0.300 to 0.400	0.01 to 0.01	0.100	0.0039	8°	30°
25	29.600	1.1654	41.800	1.6457	0.600 to 1.000	0.0236 to 0.0394	0.300 to 0.400	0.01 to 0.01	0.100	0.0039	8°	30°
30	35.500	1.3976	47.800	1.8819	0.600 to 1.000	0.0236 to 0.0394	0.300 to 0.400	0.01 to 0.01	0.100	0.0039	6°	30°
35	41.700	1.6417	53.800	2.1181	0.800 to 1.200	0.0315 to 0.0472	0.300 to 0.400	0.01 to 0.01	0.100	0.0039	7°	30°
40	47.000	1.8504	60.800	2.3937	0.800 to 1.200	0.0315 to 0.0472	0.300 to 0.400	0.01 to 0.01	0.100	0.0039	6°	30°
45	52.200	2.0551	68.800	2.7087	0.800 to 1.200	0.0315 to 0.0472	0.300 to 0.400	0.01 to 0.01	0.100	0.0039	5°	30°
50	59.200	2.3307	76.800	3.0236	0.800 to 1.200	0.0315 to 0.0472	0.300 to 0.400	0.01 to 0.01	0.100	0.0039	7°	30°

Schematic Drawing

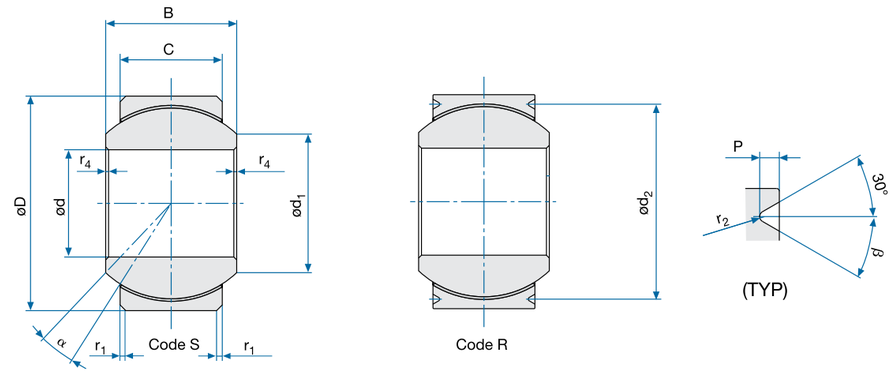

Specifications

EN4038

Diameter Code	P		Starting Torque		Static Radial Limit Load		Static Axial Limit Load		Weight	
	mm	Inch	Nm	In.-lbs	kN	lbs	kN	lbs	g	lbs
05	0.500 to 0.700	0.02 to 0.03	20.5	4608.4	1.9	427.1	7	0.015	7	0.015
06	0.500 to 0.700	0.02 to 0.03	29.2	6564.2	3.5	786.8	9	0.020	9	0.020
08	0.500 to 0.700	0.02 to 0.03	37.0	8317.6	3.9	876.7	12	0.026	12	0.026
10	0.700 to 0.900	0.03 to 0.04	47.2	10610.6	6.5	1461.2	20	0.044	20	0.044
12	0.700 to 0.900	0.03 to 0.04	78.1	17556.9	11.7	2630.2	32	0.070	32	0.070
15	0.700 to 0.900	0.03 to 0.04	121.9	27403.1	18.0	4046.4	50	0.110	50	0.110
17	0.700 to 0.900	0.03 to 0.04	148.3	33337.8	24.3	5462.6	59	0.130	59	0.130
22	1.200 to 1.400	0.05 to 0.06	268.6	60381.3	45.5	10228.4	126	0.277	126	0.277
25	1.200 to 1.400	0.05 to 0.06	324.7	72992.6	55.9	12566.3	185	0.407	185	0.407
30	1.200 to 1.400	0.05 to 0.06	433.4	97428.3	77.8	17489.4	300	0.660	300	0.660
35	1.200 to 1.400	0.05 to 0.06	543.4	122156.3	92.2	20726.56	340	0.748	340	0.748
40	1.200 to 1.400	0.05 to 0.06	680.9	153066.3	113.4	25492.32	460	1.012	460	1.012
45	1.200 to 1.400	0.05 to 0.06	833.9	187460.7	135.9	30550.32	630	1.386	630	1.386
50	1.200 to 1.400	0.05 to 0.06	981.4	220618.7	154.2	34664.16	870	1.914	870	1.914

Designation

EN4038
Number of Standard

R
Type of Mounting
R: With Mounting Grooves
S: Without Mounting Grooves

10
Diameter Code

P
Surface Treatment
No Code: None
T: Passivated
P: Chromium Plated Ball

Part Number Example
EN4038 R 10 P

Bearing Materials:

Liner
per EN2755

Outer Ring
EN3161 / 1.4548 / 17-4PH H1150

Inner Ring
EN2030 / 1.3544.9 / AISI 440C

Technical Specification
EN2755

** Inch dimensions are for reference only. | * Permanently marked in non-functional area.*

Contact

USA: KAMATICS CORPORATION 1330 Blue Hills Avenue Bloomfield, CT 06002 USA | **Tel:** +1 860 243 9704 | **E-mail:** KSB@kaman.com
GERMANY: RWG GERMANY GmbH Medbacher Weg 1 D-91315 Höchstadt a. d. Aisch | **Tel:** +49 (91 93) 50105 100 | **E-mail:** RWG@kaman.com

Spherical Bearings

EN4039

- Self-Lubricating
- CRES

Specifications

Diameter Code	d		Δ dmp		D		Δ Dmp		B		C	
									+0.060 −0.060	+0.0024 −0.0024	±0.100	±0.0039
	mm	Inch	mm	Inch	mm	Inch	mm	Inch	mm	Inch	mm	Inch
06	6.000	0.2362	-0.008	-0.0003	16.000	0.6299	-0.008	-0.0003	11.000	0.4331	8.500	0.3346
08	8.000	0.3150	-0.008	-0.0003	18.000	0.7087	-0.008	-0.0003	11.000	0.4331	8.000	0.3150
10	10.000	0.3937	-0.009	-0.0004	21.000	0.8268	-0.008	-0.0003	12.500	0.4921	10.000	0.3937
12	12.000	0.4724	-0.009	-0.0004	26.000	1.0236	-0.008	-0.0003	16.000	0.6299	13.000	0.5118
15	15.000	0.5906	-0.009	-0.0004	29.000	1.1417	-0.008	-0.0003	17.000	0.6693	13.500	0.5315
17	17.000	0.6693	-0.009	-0.0004	30.000	1.1811	-0.008	-0.0003	18.000	0.7087	14.500	0.5709
20	20.000	0.7874	-0.011	-0.0004	35.000	1.3780	-0.010	-0.0004	20.000	0.7874	16.000	0.6299
25	25.000	0.9843	-0.013	-0.0005	54.000	2.1260	-0.010	-0.0004	32.000	1.2598	26.000	1.0236
30	30.000	1.1811	-0.013	-0.0005	60.000	2.3622	-0.010	-0.0004	34.000	1.3386	28.000	1.1024
35	35.000	1.3780	-0.013	-0.0005	65.000	2.5591	-0.012	-0.0005	36.000	1.4173	29.000	1.1417
40	40.000	1.5748	-0.013	-0.0005	68.000	2.6772	-0.012	-0.0005	38.000	1.4961	31.000	1.2205
45	45.000	1.7717	-0.013	-0.0005	76.000	2.9921	-0.012	-0.0005	41.000	1.6142	33.000	1.2992
50	50.000	1.9685	-0.015	-0.0006	82.000	3.2283	-0.012	-0.0005	44.000	1.7323	35.000	1.3780

Diameter Code	d_1 (min.)		d_2		r_1 x 45°		r_2		r_4 x 45°		α	β
			+0.100	+0.0039			+0.100	+0.0039	+ 0.300			±0.5°
	mm	Inch	mm	Inch	mm	Inch	mm	Inch	mm	Inch		
06	7.700	0.3031	14.200	0.5591	0.500 to 0.800	0.0200 to 0.0300	0.200	0.0079	0.100	0.0039	15°	20°
08	10.300	0.4055	16.200	0.6378	0.500 to 0.800	0.0200 to 0.0300	0.200	0.0079	0.100	0.0039	14°	20°
10	12.200	0.4803	18.400	0.7244	0.500 to 0.800	0.0200 to 0.0300	0.200	0.0079	0.100	0.0039	10°	30°
12	15.500	0.6102	23.400	0.9213	0.500 to 0.800	0.0200 to 0.0300	0.200	0.0079	0.100	0.0039	10°	30°
15	18.900	0.7441	26.400	1.0394	0.500 to 0.800	0.0200 to 0.0300	0.200	0.0079	0.100	0.0039	9°	30°
17	20.100	0.7913	27.400	1.0787	0.500 to 0.800	0.0200 to 0.0300	0.200	0.0079	0.100	0.0039	9°	30°
20	23.500	0.9252	31.800	1.2520	0.600 to 1.000	0.0200 to 0.0400	0.300	0.0118	0.100	0.0039	8°	30°
25	35.300	1.3898	50.800	2.0000	0.600 to 1.000	0.0200 to 0.0400	0.300	0.0118	0.100	0.0039	9°	30°
30	40.900	1.6102	56.800	2.2362	0.600 to 1.000	0.0200 to 0.0400	0.300	0.0118	0.100	0.0039	8°	30°
35	45.500	1.7913	61.800	2.4331	0.800 to 1.200	0.0300 to 0.0500	0.300	0.0118	0.100	0.0039	8°	30°
40	47.000	1.8504	64.800	2.5512	0.800 to 1.200	0.0300 to 0.0500	0.300	0.0118	0.100	0.0039	8°	30°
45	54.100	2.1299	72.800	2.8661	0.800 to 1.200	0.0300 to 0.0500	0.300	0.0118	0.100	0.0039	8°	30°
50	60.300	2.3740	78.800	3.1024	0.800 to 1.200	0.0300 to 0.0500	0.300	0.0118	0.100	0.0039	8°	30°

Schematic Drawing

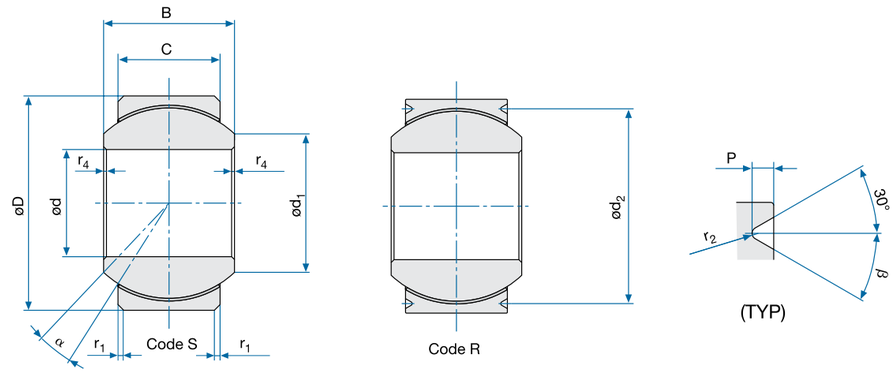

Specifications

EN4039

Diameter Code	P		Starting Torque		Static Radial Limit Load		Static Axial Limit Load		Weight	
	-0.200	-0.0079								
	mm	Inch	Nm	In.-lbs	kN	lbs	kN	lbs	g	lbs
06	0.700	0.0276	0.005 to 0.060	0.044 to 0.53	42.6	9576.5	7.2	1618.6	16	0.035
08	0.700	0.0276	0.006 to 0.080	0.044 to 0.71	45.7	10273.4	6.4	1438.7	17	0.037
10	0.900	0.0354	0.008 to 0.100	0.071 to 0.89	68.7	15443.8	11.7	2630.2	27	0.059
12	0.900	0.0354	0.008 to 0.100	0.071 to 0.89	116.4	26166.7	21.5	4833.2	49	0.108
15	0.900	0.0354	0.010 to 0.120	0.089 to 1.06	139.0	31247.2	24.1	5417.7	62	0.136
17	0.900	0.0354	0.010 to 0.120	0.089 to 1.06	159.1	35765.7	29.0	6519.2	69	0.152
20	1.400	0.0551	0.010 to 0.120	0.089 to 1.06	207.5	46646.0	36.0	8092.8	104	0.229
25	1.400	0.0551	0.015 to 0.250	0.133 to 2.21	496.6	111635.7	93.2	20951.4	445	0.979
30	1.400	0.0551	0.020 to 0.400	0.18 to 3.54	587.5	132070.0	109.6	24638.1	480	1.056
35	1.400	0.0551	0.020 to 0.400	0.18 to 3.54	666.0	149716.8	117.6	26436.5	565	1.243
40	1.400	0.0551	0.025 to 0.500	0.22 to 4.43	745.6	167610.9	136.6	30707.68	600	1.320
45	1.400	0.0551	0.030 to 0.600	0.27 to 5.31	895.9	201398.3	155.6	34978.88	800	1.760
50	1.400	0.0551	0.030 to 0.600	0.27 to 5.31	1024.7	230352.6	176.2	39609.76	970	2.134

Designation

EN4039
Number of Standard

R
Type of Mounting
R: With Mounting Grooves
S: Without Mounting Grooves

10
Diameter Code

T
Surface Treatment
No Code: None
T: Passivated

Part Number Example
EN4039 R 10 T

Bearing Materials:

Liner
per EN2755

Outer Ring
EN2539 / 1.4548 / 17-4PH H1150

Inner Ring
EN2030 / 1.3544.9 / AISI 440CC

Technical Specification
EN2755

** Inch dimensions are for reference only. | * Permanently marked in non-functional area.*

Contact

USA: KAMATICS CORPORATION 1330 Blue Hills Avenue Bloomfield, CT 06002 USA | **Tel:** +1 860 243 9704 | **E-mail:** KSB@kaman.com
GERMANY: RWG GERMANY GmbH Medbacher Weg 1 D-91315 Höchstadt a. d. Aisch | **Tel:** +49 (91 93) 50105 100 | **E-mail:** RWG@kaman.com

Spherical Bearings

FRA

- Self-Lubricating
- CRES

Specifications

Diameter Code	d		Δ dmp		D		Δ Dmp		B		C	
									–0.060	–0.0024	±0.100	±0.0039
	mm	Inch	mm	Inch	mm	Inch	mm	Inch	mm	Inch	mm	Inch
12	12.000	0.4724	-0.008	-0.0003	22.000	0.8661	-0.009	-0.0004	10.000	0.3937	7.000	0.2756
15	15.000	0.5906	-0.008	-0.0003	28.000	1.1024	-0.009	-0.0004	12.000	0.4724	9.000	0.3543
15/26	15.000	0.5906	-0.008	-0.0003	26.000	1.0236	-0.009	-0.0004	12.000	0.4724	9.000	0.3543
17	17.000	0.6693	-0.008	-0.0003	32.000	1.2598	-0.011	-0.0004	14.000	0.5512	10.000	0.3937
17/30	17.000	0.6693	-0.008	-0.0003	30.000	1.1811	-0.009	-0.0004	14.000	0.5512	10.000	0.3937
20	20.000	0.7874	-0.010	-0.0004	35.000	1.3780	-0.011	-0.0004	16.000	0.6299	12.000	0.4724
25	25.000	0.9843	-0.010	-0.0004	42.000	1.6535	-0.011	-0.0004	20.000	0.7874	16.000	0.6299
30	30.000	1.1811	-0.010	-0.0004	47.000	1.8504	-0.011	-0.0004	22.000	0.8661	18.000	0.7087
35	35.000	1.3780	-0.012	-0.0005	55.000	2.1654	-0.013	-0.0005	25.000	0.9843	20.000	0.7874
40	40.000	1.5748	-0.012	-0.0005	62.000	2.4409	-0.013	-0.0005	28.000	1.1024	22.000	0.8661
45	45.000	1.7717	-0.012	-0.0005	68.000	2.6772	-0.013	-0.0005	32.000	1.2598	25.000	0.9843
50	50.000	1.9685	-0.012	-0.0005	75.000	2.9528	-0.013	-0.0005	35.000	1.3780	28.000	1.1024

Diameter Code	d_1 (min.)		d_2		r_1		P		r_2		α
			+0.100	+0.0039			-0.200	-0.0079			
	mm	Inch	mm	Inch	mm	Inch	mm	Inch	mm	Inch	
12	14.300	0.5630	20.200	0.7953	0.500	0.0197	0.700	0.0276	0.200	0.0079	11°
15	18.700	0.7362	26.200	1.0315	0.500	0.0197	0.700	0.0276	0.200	0.0079	9°
15/26	18.700	0.7362	24.200	0.9528	0.500	0.0197	0.700	0.0276	0.200	0.0079	9°
17	21.200	0.8346	30.200	1.1890	0.500	0.0197	0.700	0.0276	0.200	0.0079	10°
17/30	21.200	0.8346	28.200	1.1102	0.500	0.0197	0.700	0.0276	0.200	0.0079	10°
20	24.900	0.9803	33.200	1.3071	0.500	0.0197	0.700	0.0276	0.200	0.0079	9°
25	30.000	1.1811	39.400	1.5512	0.500	0.0197	0.900	0.0354	0.300	0.0118	7°
30	34.300	1.3504	44.400	1.7480	0.500	0.0197	0.900	0.0354	0.300	0.0118	6°
35	40.500	1.5945	51.800	2.0394	0.600	0.0236	1.400	0.0551	0.300	0.0118	7°
40	45.000	1.7717	58.800	2.3150	0.600	0.0236	1.400	0.0551	0.300	0.0118	7°
45	51.300	2.0197	64.800	2.5512	0.600	0.0236	1.400	0.0551	0.300	0.0118	7°
50	58.200	2.2913	71.800	2.8268	0.600	0.0236	1.400	0.0551	0.300	0.0118	7°

Schematic Drawing

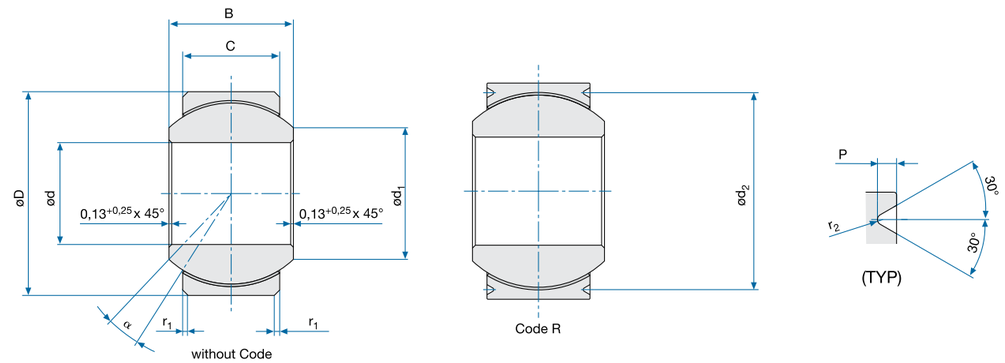

Specifications

FRA

Diameter Code	Starting Torque		Static Radial Limit Load		Static Axial Limit Load		Weight	
	Nm	In.-lbs	kN	lbs	kN	lbs	g	lbs
12	0.120 to 0.800	1.06 to 7.08	46.4	10430.7	3.7	831.8	17	0.037
15	0.120 to 0.800	1.06 to 7.08	79.5	17871.6	8.0	1798.4	34	0.075
15/26	0.120 to 0.800	1.06 to 7.08	79.5	17871.6	8.0	1798.4	32	0.070
17	0.120 to 0.800	1.06 to 7.08	102.6	23064.5	10.6	2382.9	51	0.112
17/30	0.120 to 0.800	1.06 to 7.08	102.6	23064.5	10.6	2382.9	49	0.108
20	0.120 to 0.800	1.06 to 7.08	147.4	33135.5	17.0	3821.6	65	0.143
25	0.250 to 1.000	2.21 to 8.85	221.7	49838.2	28.7	6451.8	115	0.253
30	0.400 to 2.000	3.54 to 17.7	285.6	64202.9	38.2	8587.4	160	0.352
35	0.400 to 2.000	3.54 to 17.7	374.5	84187.6	48.7	10947.8	230	0.506
40	0.600 to 3.500	5.31 to 31.0	462.7	104015.0	60.7	13645.4	315	0.693
45	0.600 to 3.500	5.31 to 31.0	605.8	136183.8	81.6	18343.7	460	1.012
50	0.600 to 3.500	5.31 to 31.0	768.0	172646.4	105.6	23738.9	560	1.232

Designation

FRA
Number of Series

12
Diameter Code

R
Type of Mounting
None: Without Mounting Grooves
R: With Mounting Grooves

Part Number Example
FRA 12 R

Bearing Materials:

Liner
per EN2755 / SAE AS81820

Outer Ring
EN3161 / 1.4548 / 17-4 PH H1150

Inner Ring
EN2030 / 1.3544.9 / AISI 440C

Technical Specification
EN2755

** Inch dimensions are for reference only. | * Permanently marked in non-functional area.*

Contact

USA: KAMATICS CORPORATION 1330 Blue Hills Avenue Bloomfield, CT 06002 USA | **Tel:** +1 860 243 9704 | **E-mail:** KSB@kaman.com
GERMANY: RWG GERMANY GmbH Medbacher Weg 1 D-91315 Höchstadt a. d. Aisch | **Tel:** +49 (91 93) 50105 100 | **E-mail:** RWG@kaman.com

Spherical Bearings

EN2335

- Greased
- CRES

Specifications

EN2335

Diameter Code	d		Δ dmp		D		Δ Dmp		B		C	
									–0.060	–0.0024	±0.100	±0.0039
	mm	Inch	mm	Inch	mm	Inch	mm	Inch	mm	Inch	mm	Inch
04	4.000	0.1575	-0.008	-0.0003	12.000	0.4724	-0.008	-0.0003	5.000	0.1969	3.000	0.1181
05	5.000	0.1969	-0.008	-0.0003	14.000	0.5512	-0.008	-0.0003	6.000	0.2362	4.000	0.1575
06	6.000	0.2362	-0.008	-0.0003	14.000	0.5512	-0.008	-0.0003	6.000	0.2362	4.000	0.1575
08	8.000	0.3150	-0.008	-0.0003	16.000	0.6299	-0.008	-0.0003	8.000	0.3150	5.000	0.1969
10	8.000	0.3150	-0.008	-0.0003	19.000	0.7480	-0.009	-0.0004	9.000	0.3543	6.000	0.2362
12	12.000	0.4724	-0.008	-0.0003	22.000	0.8661	-0.009	-0.0004	10.000	0.3937	7.000	0.2756
15	15.000	0.5906	-0.008	-0.0003	26.000	1.0236	-0.009	-0.0004	12.000	0.4724	9.000	0.3543
15a	15.000	0.5906	-0.008	-0.0003	26.000	1.0236	-0.009	-0.0004	12.000	0.4724	9.000	0.3543
17	17.000	0.6693	-0.008	-0.0003	30.000	1.1811	-0.011	-0.0004	14.000	0.5512	10.000	0.3937
17a	17.000	0.6693	-0.008	-0.0003	30.000	1.1811	-0.011	-0.0004	14.000	0.5512	10.000	0.3937
20	20.000	0.7874	-0.010	-0.0004	35.000	1.3780	-0.011	-0.0004	16.000	0.6299	12.000	0.4724
20a	20.000	0.7874	-0.010	-0.0004	35.000	1.3780	-0.011	-0.0004	16.000	0.6299	12.000	0.4724
25	25.000	0.9843	-0.010	-0.0004	42.000	1.6535	-0.011	-0.0004	20.000	0.7874	16.000	0.6299
25a	25.000	0.9843	-0.010	-0.0004	42.000	1.6535	-0.011	-0.0004	20.000	0.7874	16.000	0.6299
30	30.000	1.1811	-0.010	-0.0004	47.000	1.8504	-0.011	-0.0004	22.000	0.8661	18.000	0.7087
30a	30.000	1.1811	-0.010	-0.0004	47.000	1.8504	-0.011	-0.0004	22.000	0.8661	18.000	0.7087
35	35.000	1.3780	-0.012	-0.0005	55.000	2.1654	-0.013	-0.0005	25.000	0.984	20.000	0.787
40	40.000	1.5748	-0.012	-0.0005	62.000	2.4409	-0.013	-0.0005	28.000	1.1024	22.000	0.8661
45	45.000	1.7717	-0.012	-0.0005	68.000	2.6772	-0.013	-0.0005	32.000	1.2598	25.000	0.9843
50	50.000	1.9685	-0.012	-0.0005	75.000	2.9528	-0.013	-0.0005	35.000	1.3780	28.000	1.1024
60	60.000	2.3622	-0.015	-0.0006	90.000	3.5433	-0.015	-0.0006	44.000	1.7323	36.000	1.4173

little "a" means: "Code 1 added to the end of the part designation"

Schematic Drawing

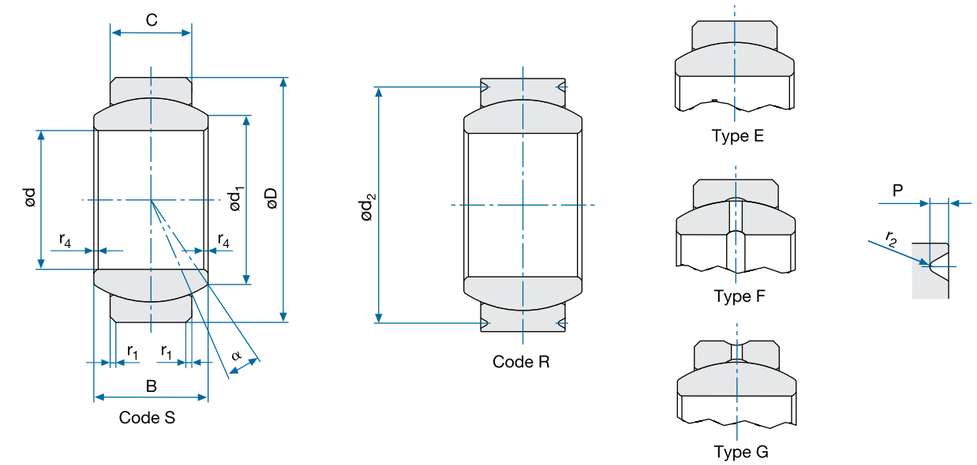

Specifications

EN2335

Diameter Code	d_1 (min.)		d_2		P		r_2		r_4 x 45°		Δ r_4	
			+0.100	+0.0039	–0.200	–0.0079	+0.100	+0.0039				
	mm	Inch	mm	Inch	mm	Inch	mm	Inch	mm	Inch	mm	Inch
04	6.000	0.2362	12.200	0.4803	0.700	0.0276	0.200	0.0079	0.300	0.0118	+ 0.300	+0.0118
05	8.000	0.3150	12.200	0.4803	0.700	0.0276	0.200	0.0079	0.300	0.0118	+ 0.300	+0.0118
06	8.000	0.3150	12.200	0.4803	0.700	0.0276	0.200	0.0079	0.300	0.0118	+ 0.300	+0.0118
08	10.000	0.3937	14.200	0.5591	0.700	0.0276	0.200	0.0079	0.300	0.0118	+ 0.300	+0.0118
10	13.000	0.5118	17.200	0.6772	0.700	0.0276	0.200	0.0079	0.500	0.0197	+ 0.300	+0.0118
12	15.000	0.5906	20.200	0.7953	0.700	0.0276	0.200	0.0079	0.500	0.0197	+ 0.300	+0.0118
15	18.000	0.7087	24.200	0.9528	0.700	0.0276	0.200	0.0079	0.500	0.0197	+ 0.300	+0.0118
15a	18.000	0.7087	24.000	0.9449	0.900	0.0354	0.200	0.0079	0.500	0.0197	+ 0.300	+0.0118
17	20.000	0.7874	28.200	1.1102	0.700	0.0276	0.200	0.0079	0.500	0.0197	+ 0.300	+0.0118
17a	20.000	0.7874	28.000	1.1024	0.900	0.0354	0.200	0.0079	0.500	0.0197	+ 0.300	+0.0118
20	24.000	0.9449	33.200	1.3071	0.700	0.0276	0.200	0.0079	0.500	0.0197	+ 0.300	+0.0118
20a	24.000	0.9449	33.000	1.2992	0.900	0.0354	0.200	0.0079	0.500	0.0197	+ 0.300	+0.0118
25	29.000	1.1417	39.400	1.5512	0.900	0.0354	0.300	0.0118	0.500	0.0197	+ 0.300	+0.0118
25a	29.000	1.1417	38.800	1.5276	1.400	0.0551	0.300	0.0118	0.500	0.0197	+ 0.300	+0.0118
30	34.000	1.3386	44.400	1.7480	0.900	0.0354	0.300	0.0118	0.500	0.0197	+ 0.300	+0.0118
30a	34.000	1.3386	43.800	1.7244	1.400	0.0551	0.300	0.0118	0.500	0.0197	+ 0.300	+0.0118
35	39.000	1.5354	51.800	2.0394	1.400	0.0551	0.300	0.0118	0.600	0.0236	+ 0.400	+0.0157
40	45.000	1.7717	58.800	2.3150	1.400	0.0551	0.300	0.0118	0.600	0.0236	+ 0.400	+0.0157
45	50.000	1.9685	64.800	2.5512	1.400	0.0551	0.300	0.0118	0.600	0.0236	+ 0.400	+0.0157
50	55.000	2.1654	71.800	2.8268	1.400	0.0551	0.300	0.0118	1.200	0.0472	+ 0.500	+0.0197
60	66.000	2.5984	86.800	3.4173	1.400	0.0551	0.300	0.0118	1.200	0.0472	+ 0.500	+0.0197

EN2335 continued on pg 122. ►

Specifications

EN2335

Diameter Code	Radial Play Code N		Radial Play Code P		Axial Play Code N		Axial Play Code P	
	mm	Inch	mm	Inch	mm	Inch	mm	Inch
04	0.020 max.	0.0008 max	0.010 max.	0.0004 max	0.035 to 0.075	0.0014 to 0.0030	0.005 to 0.035	0.0002 to 0.0014
05	0.020 max.	0.0008 max	0.010 max.	0.0004 max	0.035 to 0.075	0.0014 to 0.0030	0.005 to 0.035	0.0002 to 0.0014
06	0.020 max.	0.0008 max	0.010 max.	0.0004 max	0.035 to 0.075	0.0014 to 0.0030	0.005 to 0.035	0.0002 to 0.0014
08	0.020 max.	0.0008 max	0.010 max.	0.0004 max	0.035 to 0.075	0.0014 to 0.0030	0.005 to 0.035	0.0002 to 0.0014
10	0.020 max.	0.0008 max	0.010 max.	0.0004 max	0.035 to 0.075	0.0014 to 0.0030	0.005 to 0.035	0.0002 to 0.0014
12	0.020 max.	0.0008 max	0.010 max.	0.0004 max	0.035 to 0.075	0.0014 to 0.0030	0.005 to 0.035	0.0002 to 0.0014
15	0.020 max.	0.0008 max	0.010 max.	0.0004 max	0.035 to 0.075	0.0014 to 0.0030	0.005 to 0.035	0.0002 to 0.0014
15a	0.020 max.	0.0008 max	0.010 max.	0.0004 max	0.035 to 0.075	0.0014 to 0.0030	0.005 to 0.035	0.0002 to 0.0014
17	0.025 max.	0.0010 max	0.012 max.	0.0005 max	0.040 to 0.080	0.0016 to 0.0031	0.005 to 0.040	0.0002 to 0.0016
17a	0.025 max.	0.0010 max	0.012 max.	0.0005 max	0.040 to 0.080	0.0016 to 0.0031	0.005 to 0.040	0.0002 to 0.0016
20	0.025 max.	0.0010 max	0.012 max.	0.0005 max	0.040 to 0.080	0.0016 to 0.0031	0.005 to 0.040	0.0002 to 0.0016
20a	0.025 max.	0.0010 max	0.012 max.	0.0005 max	0.040 to 0.080	0.0016 to 0.0031	0.005 to 0.040	0.0002 to 0.0016
25	0.030 max.	0.0012 max	0.015 max.	0.0006 max	0.050 to 0.100	0.0020 to 0.0039	0.005 to 0.050	0.0002 to 0.0020
25a	0.030 max.	0.0012 max	0.015 max.	0.0006 max	0.050 to 0.100	0.0020 to 0.0039	0.005 to 0.050	0.0002 to 0.0020
30	0.030 max.	0.0012 max	0.015 max.	0.0006 max	0.050 to 0.100	0.0020 to 0.0039	0.005 to 0.050	0.0002 to 0.0020
30a	0.030 max.	0.0012 max	0.015 max.	0.0006 max	0.050 to 0.100	0.0020 to 0.0039	0.005 to 0.050	0.0002 to 0.0020
35	0.030 max.	0.0012 max	0.015 max.	0.0006 max	0.050 to 0.100	0.0020 to 0.0039	0.005 to 0.050	0.0002 to 0.0020
40	0.030 max.	0.0012 max	0.015 max.	0.0006 max	0.050 to 0.100	0.0020 to 0.0039	0.005 to 0.050	0.0002 to 0.0024
45	0.035 max.	0.0014 max	0.020 max.	0.0008 max	0.060 to 0.120	0.0024 to 0.0047	0.005 to 0.060	0.0002 to 0.0024
50	0.035 max.	0.0014 max	0.020 max.	0.0008 max	0.060 to 0.120	0.0024 to 0.0047	0.005 to 0.060	0.0002 to 0.0024
60	0.035 max.	0.0014 max	0.020 max.	0.0008 max	0.060 to 0.120	0.0024 to 0.0047	0.005 to 0.060	0.0002 to 0.0024

Designation

EN2335
Number of Standard

A
Grease Type
A: NATO G 354 /MIL-PRF-23827
B: NATO G 395 /MIL-PRF-81322

P
Radial / Axial Play
N: Normal
P: Reduced

15
Diameter Code

E
Type of Lubrication Grooves and Holes
E, F, G: See Schematic Drawing

R
Type of Mounting
NS: Without Mounting Grooves
R: With Mounting Grooves

T
Surface Treatment Inner Ring
No Code: None
T :Passivated

1
Deviating Mounting Groove Dimensions

Part Number Example
EN2335 A P 15 E R T 1

Bearing Materials:

Outer Ring
EN2136 / 1.4044.6 / AISI 431

Inner Ring
EN2030 / 1.3544.9 / AISI 440C

Technical Specification
EN2337 / Outer Ring Raceway Treated with MoS2 Dry Film Lubrication

Diameter Code 04 to 12
Without Lubrication Grooves and Holes

** Inch dimensions are for reference only. | * Permanently marked in non-functional area.*

Specifications

EN2335

Diameter Code	Static Radial Limit Load		Static Axial Limit Load		Weight		α (min.)
	kN	lbs	kN	lbs	g	lbs	
04	7.2	1618.6	0.45	101.2	3	0.007	16°
05	12.6	2832.5	0.8	179.8	5	0.011	13°
06	16.0	3596.8	1.0	224.8	5	0.011	13°
08	21.0	4720.8	1.8	404.6	8	0.018	15°
10	31.0	6968.8	2.5	562.0	12	0.026	12°
12	40.5	9104.4	3.5	786.8	17	0.037	11°
15	70.0	15736.0	5.3	1191.4	32	0.070	8°
15a	70.0	15736.0	5.3	1191.4	32	0.070	8°
17	91.4	20546.7	6.7	1506.2	49	0.108	10°
17a	91.4	20546.7	6.7	1506.2	49	0.108	10°
20	130.0	29224.0	9.8	2203.0	65	0.143	9°
20a	130.0	29224.0	9.8	2203.0	65	0.143	9°
25	216.7	48714.2	18.0	4046.4	115	0.253	7°
25a	216.7	48714.2	18.0	4046.4	115	0.253	7°
30	277.5	62382.0	25.0	5620.0	160	0.352	6°
30a	277.5	62382.0	25.0	5620.0	160	0.352	6°
35	359.9	80905.52	31.0	6968.8	230	0.506	6°
40	428.8	96394.24	38.0	8542.4	315	0.693	7°
45	558.4	125528.32	50.0	11240.0	460	1.012	7°
50	760.1	170870.48	64.0	14387.2	560	1.232	6°
60	1056.0	237388.8	104.0	23379.2	1100	2.420	6°

Contact

USA: KAMATICS CORPORATION 1330 Blue Hills Avenue Bloomfield, CT 06002 USA | **Tel:** +1 860 243 9704 | **E-mail:** KSB@kaman.com
GERMANY: RWG GERMANY GmbH Medbacher Weg 1 D-91315 Höchstadt a. d. Aisch | **Tel:** +49 (91 93) 50105 100 | **E-mail:** RWG@kaman.com

Spherical Bearings

EN4265 / EN4266

- Greased
- CRES

Specifications

Diameter Code	d		Δ dmp		D		Δ Dmp		B		C	
									–0.050	-0.0020	+0.130	+0.0051
	mm	Inch	mm	Inch	mm	Inch	mm	Inch	mm	Inch	mm	Inch
03	4.826	0.1900	-0.013	-0.0005	15.875	0.6250	-0.008	-0.0003	11.100	0.4370	8.310	0.3272
04	6.350	0.2500	-0.013	-0.0005	15.875	0.6250	-0.008	-0.0003	11.100	0.4370	8.310	0.3272
05	7.938	0.3125	-0.013	-0.0005	17.463	0.6875	-0.008	-0.0003	11.100	0.4370	8.050	0.3169
06	9.525	0.3750	-0.013	-0.0005	20.638	0.8125	-0.009	-0.0004	12.700	0.5000	10.310	0.4059
07	11.113	0.4375	-0.013	-0.0005	23.813	0.9375	-0.009	-0.0004	14.270	0.5618	11.230	0.4421
07A	11.113	0.4375	-0.013	-0.0005	23.017	0.9062	-0.009	-0.0004	14.270	0.5618	11.230	0.4421
08	12.700	0.5000	-0.013	-0.0005	25.400	1.0000	-0.009	-0.0004	15.880	0.6252	12.830	0.5051
9	14.288	0.5625	-0.013	-0.0005	28.575	1.1250	-0.009	-0.0004	17.450	0.6870	13.610	0.5358
10	15.875	0.6250	-0.013	-0.0005	30.163	1.1875	-0.009	-0.0004	19.050	0.7500	14.400	0.5669
12	19.050	0.7500	-0.013	-0.0005	34.925	1.3750	-0.011	-0.0004	22.230	0.8752	16.000	0.6299
14	22.225	0.8750	-0.013	-0.0005	41.275	1.6250	-0.011	-0.0004	22.230	0.8752	19.180	0.7551
16	25.400	1.0000	-0.013	-0.0005	53.975	2.1250	-0.013	-0.0005	34.930	1.3752	25.530	1.0051
20	31.750	1.2500	-0.013	-0.0005	60.325	2.3750	-0.013	-0.0005	38.100	1.5000	28.700	1.1299
24	38.100	1.5000	-0.013	-0.0005	68.263	2.6875	-0.013	-0.0005	42.850	1.6870	31.060	1.2228
28	44.450	1.7500	-0.013	-0.0005	76.200	3.0000	-0.013	-0.0005	46.020	1.8118	33.450	1.3169
32	50.800	2.0000	-0.013	-0.0005	82.550	3.2500	-0.013	-0.0005	49.200	1.9370	35.050	1.3799

Schematic Drawing

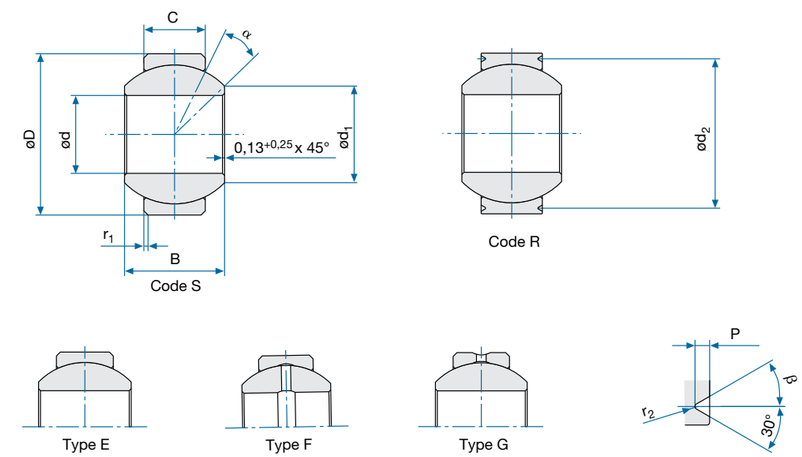

Specifications

EN4265 / EN4266

Diameter Code	d_1 (min.)		d_2		r_1 x 45°		P		α (min.)	β ±0.5°
			–0.200	-0.0079	-0.250	-0.0098	-0.250	-0.0098		
	mm	Inch	mm	Inch	mm	Inch	mm	Inch		
03	7.660	0.3016	14.300	0.5630	0.640	0.0252	0.640	0.0252	16°	20°
04	7.660	0.3016	14.300	0.5630	0.640	0.0252	0.640	0.0252	16°	20°
05	10.180	0.4008	15.880	0.6252	0.640	0.0252	0.640	0.0252	15.5°	30°
06	11.960	0.4709	18.080	0.7118	0.640	0.0252	0.890	0.0350	9.5°	30°
07	13.770	0.5421	21.260	0.8370	0.760	0.0299	0.890	0.0350	11°	30°
07A	13.770	0.5421	20.520	0.8079	0.760	0.0299	0.890	0.0350	11°	30°
08	15.550	0.6122	22.860	0.9000	0.760	0.0299	0.890	0.0350	9.5°	30°
9	18.450	0.7264	26.040	1.0252	0.760	0.0299	0.890	0.0350	10.5°	30°
10	19.090	0.7516	27.610	1.0870	0.760	0.0299	0.890	0.0350	12°	30°
12	22.670	0.8925	31.780	1.2512	1.020	0.0402	1.400	0.0551	14°	30°
14	26.940	1.0606	38.130	1.5012	1.020	0.0402	1.400	0.0551	6°	30°
16	32.370	1.2744	50.830	2.0012	1.020	0.0402	1.400	0.0551	14.5°	30°
20	37.130	1.4618	57.180	2.2512	1.020	0.0402	1.400	0.0551	12.5°	30°
24	45.500	1.7913	65.100	2.5630	1.020	0.0402	1.400	0.0551	14°	30°
28	49.910	1.9650	73.050	2.8760	1.020	0.0402	1.400	0.0551	13°	30°
32	56.100	2.2087	79.350	3.1240	1.020	0.0402	1.400	0.0551	13°	30°

EN4265 / EN4266 continued on pg 126. ►

Specifications

EN4265 / EN4266

Diameter Code	R_2		Axial Play Normal / Code N		Axial Play Reduced / Code P		Static Radial Limit Load	
	mm	Inch	mm	Inch	mm	Inch	kN	lbs
03	0.127 to 0.254	0.0050 to 0.0100	0.120	0.0047	0.035	0.0014	10.7	2405.4
04	0.127 to 0.254	0.0050 to 0.0100	0.120	0.0047	0.035	0.0014	24.5	5507.6
05	0.127 to 0.254	0.0050 to 0.0100	0.120	0.0047	0.035	0.0014	47.8	10745.4
06	0.254 to 0.432	0.0100 to 0.0170	0.120	0.0047	0.035	0.0014	72.1	16208.1
07	0.254 to 0.432	0.0100 to 0.0170	0.120	0.0047	0.035	0.0014	100.8	22659.8
07A	0.254 to 0.432	0.0100 to 0.0170	0.120	0.0047	0.035	0.0014	100.8	22659.8
08	0.254 to 0.432	0.0100 to 0.0170	0.229	0.0090	0.035	0.0014	131.7	29606.2
9	0.254 to 0.432	0.0100 to 0.0170	0.229	0.0090	0.040	0.0016	161.0	36192.8
10	0.254 to 0.432	0.0100 to 0.0170	0.229	0.0090	0.040	0.0016	182.4	41003.5
12	0.254 to 0.432	0.0100 to 0.0170	0.229	0.0090	0.050	0.0020	223.6	50265.3
14	0.254 to 0.432	0.0100 to 0.0170	0.229	0.0090	0.050	0.0020	299.3	67282.6
16	0.254 to 0.432	0.0100 to 0.0170	0.229	0.0090	0.050	0.0020	497.4	111815.5
20	0.254 to 0.432	0.0100 to 0.0170	0.229	0.0090	0.050	0.0020	741.6	166711.7
24	0.254 to 0.432	0.0100 to 0.0170	0.229	0.0090	0.050	0.0020	923.2	207535.4
28	0.254 to 0.432	0.0100 to 0.0170	0.229	0.0090	0.050	0.0020	1117.2	251146.6
32	0.254 to 0.432	0.0100 to 0.0170	0.229	0.0090	0.060	0.0024	1291.2	290261.8

Specifications

EN4265 / EN4266

Diameter Code	Static Axial Limit Load		Weight		Radial Play Normal / Code N		Radial Play Reduced / Code P	
	kN	lbs	g	lbs	mm	Inch	mm	Inch
03	19.3	4338.6	13	0.029	0.010 to 0.030	0.0004 to 0.0012	0.002 to 0.010	0.0001 to 0.0004
04	19.3	4338.6	12	0.026	0.010 to 0.030	0.0004 to 0.0012	0.002 to 0.010	0.0001 to 0.0004
05	18.0	4046.4	13	0.029	0.010 to 0.030	0.0004 to 0.0012	0.002 to 0.010	0.0001 to 0.0004
06	27.4	6159.5	23	0.051	0.010 to 0.030	0.0004 to 0.0012	0.002 to 0.010	0.0001 to 0.0004
07	33.5	7530.8	33	0.073	0.010 to 0.030	0.0004 to 0.0012	0.002 to 0.010	0.0001 to 0.0004
07A	33.5	7530.8	30	0.066	0.010 to 0.030	0.0004 to 0.0012	0.002 to 0.010	0.0001 to 0.0004
08	45.6	10250.9	40	0.088	0.010 to 0.050	0.0004 to 0.0020	0.002 to 0.010	0.0001 to 0.0004
9	52.1	11712.1	56	0.123	0.010 to 0.050	0.0004 to 0.0020	0.003 to 0.012	0.0001 to 0.0005
10	59.2	13308.2	63	0.139	0.010 to 0.050	0.0004 to 0.0020	0.003 to 0.012	0.0001 to 0.0005
12	66.8	15016.6	92	0.202	0.010 to 0.050	0.0004 to 0.0020	0.004 to 0.015	0.0002 to 0.0006
14	101.7	22862.2	146	0.321	0.010 to 0.050	0.0004 to 0.0020	0.004 to 0.015	0.0002 to 0.0006
16	193.3	43453.8	392	0.862	0.010 to 0.050	0.0004 to 0.0020	0.004 to 0.015	0.0002 to 0.0006
20	249.9	56177.5	499	1.098	0.010 to 0.050	0.0004 to 0.0020	0.004 to 0.015	0.0002 to 0.0006
24	296.8	66720.6	668	1.470	0.010 to 0.050	0.0004 to 0.0020	0.004 to 0.015	0.0002 to 0.0006
28	348.3	78297.8	859	1.890	0.010 to 0.050	0.0004 to 0.0020	0.004 to 0.015	0.0002 to 0.0006
32	385.1	86570.5	1005	2.211	0.010 to 0.050	0.0004 to 0.0020	0.005 to 0.020	0.0002 to 0.0008

Designation

EN4266
Number of Standard

A
Grease Type
A: NATO G 354 / MIL-PRF-23827
B: NATO G 395 / MIL-PRF-81322

P
Radial / Axial Play
N: Normal
P: Reduced

16
Diameter Code

E
Type of Lubrication Grooves and Holes
E, F, G: See Schematic Drawing

R
Type of Mounting
S: Without Mounting Grooves
R: With Mounting Grooves

Part Number Example
EN4266 A P 16 E R

Bearing Materials:

Outer Ring
EN3161 / 1.4548 / 17-4 PH H1150
EN4266 / EN2133 Cadmium Plated

Inner Ring
EN2030 / 1.3544.9 / AISI 440CC

Technical Specification
EN2337 / Outer Ring Raceway Treated with MoS_2 Dry Film Lubrication

** Inch dimensions are for reference only. | * Permanently marked in non-functional area.*

Contact

USA: KAMATICS CORPORATION 1330 Blue Hills Avenue Bloomfield, CT 06002 USA | **Tel:** +1 860 243 9704 | **E-mail:** KSB@kaman.com
GERMANY: RWG GERMANY GmbH Medbacher Weg 1 D-91315 Höchstadt a. d. Aisch | **Tel:** +49 (91 93) 50105 100 | **E-mail:** RWG@kaman.com

Spherical Bearings

EN6046

- Greased
- CRES

Specifications

Diameter Code	d		Δ dmp		D		Δ Dmp		B		C		d_1 (min.)	
									–0.050	–0.0020	+0.130	+0.0051		
	mm	Inch	mm	Inch	mm	Inch	mm	Inch	mm	Inch	mm	Inch	mm	Inch
03	4.826	0.1900	-0.013	-0.0005	14.288	0.5625	-0.008	-0.0003	7.140	0.2811	5.540	0.2181	7.440	0.293
04	6.350	0.2500	-0.013	-0.0005	16.667	0.6562	-0.008	-0.0003	8.710	0.3429	6.350	0.2500	9.250	0.364
05	7.938	0.3125	-0.013	-0.0005	19.050	0.7500	-0.008	-0.0003	9.530	0.3752	7.140	0.2811	10.640	0.419
06	9.525	0.3750	-0.013	-0.0005	20.638	0.8125	-0.009	-0.0004	10.310	0.4059	7.920	0.3118	12.070	0.475
07	11.113	0.4375	-0.013	-0.0005	23.017	0.9062	-0.009	-0.0004	11.100	0.4370	8.710	0.3429	13.460	0.530
08	12.700	0.5000	-0.013	-0.0005	25.400	1.0000	-0.009	-0.0004	12.700	0.5000	9.910	0.3902	15.240	0.600
09	14.288	0.5625	-0.013	-0.0005	27.780	1.0937	-0.009	-0.0004	14.270	0.5618	11.100	0.4370	17.020	0.670
10	15.875	0.6250	-0.013	-0.0005	30.163	1.1875	-0.009	-0.0004	15.880	0.6252	12.700	0.5000	18.770	0.739
12	19.050	0.7500	-0.013	-0.0005	36.513	1.4375	-0.011	-0.0004	19.050	0.7500	15.060	0.5929	23.370	0.920
14	22.225	0.8750	-0.013	-0.0005	39.688	1.5625	-0.011	-0.0004	22.230	0.8752	17.860	0.7031	24.890	0.980
16	25.400	1.0000	-0.013	-0.0005	44.450	1.7500	-0.013	-0.0005	25.400	1.0000	20.240	0.7969	28.400	1.118
20	31.750	1.2500	-0.013	-0.0005	50.800	2.0000	-0.013	-0.0005	27.760	1.0929	23.930	0.9421	36.420	1.434
24	38.100	1.5000	-0.013	-0.0005	61.913	2.4375	-0.013	-0.0005	33.320	1.3118	28.700	1.1299	46.410	1.827
28	44.450	1.7500	-0.013	-0.0005	71.438	2.8125	-0.013	-0.0005	38.890	1.5311	33.450	1.3169	50.700	1.996
32	50.800	2.0000	-0.013	-0.0005	80.963	3.1875	-0.013	-0.0005	44.450	1.7500	38.230	1.5051	61.980	2.440

Diameter Code	d_2		P		r_1 x 45°		r_2		α (min.)	ß	Weight	
	-0.200	-0.0079	-0.250	-0.0098	-0.250	-0.0098						
	mm	Inch	mm	Inch	mm	Inch	mm	Inch			g	lbs
03	12.700	0.500	0.640	0.0252	0.640	0.0252	0.127 to 0.254	0.0050 to 0.0100	10°	20°	7	0.015
04	15.090	0.594	0.640	0.0252	0.640	0.0252	0.127 to 0.254	0.0050 to 0.0100	12°	20°	11	0.024
05	16.760	0.660	0.890	0.0350	0.640	0.0252	0.127 to 0.254	0.0050 to 0.0100	11°	20°	14	0.031
06	18.080	0.712	0.890	0.0350	0.760	0.0299	0.254 to 0.432	0.0100 to 0.0170	9°	30°	18	0.040
07	20.470	0.806	0.890	0.0350	0.760	0.0299	0.254 to 0.432	0.0100 to 0.0170	8.5°	30°	23	0.051
08	22.250	0.876	1.400	0.0551	0.760	0.0299	0.254 to 0.432	0.0100 to 0.0170	9°	30°	32	0.070
09	24.640	0.970	1.400	0.0551	0.760	0.0299	0.254 to 0.432	0.0100 to 0.0170	9.5°	30°	41	0.090
10	27.000	1.063	1.400	0.0551	0.760	0.0299	0.254 to 0.432	0.0100 to 0.0170	8.5°	30°	54	0.119
12	33.350	1.313	1.400	0.0551	1.020	0.0402	0.254 to 0.432	0.0100 to 0.0170	8.5°	30°	95	0.209
14	36.530	1.438	1.400	0.0551	1.020	0.0402	0.254 to 0.432	0.0100 to 0.0170	9°	30°	122	0.268
16	41.300	1.626	1.400	0.0551	1.020	0.0402	0.254 to 0.432	0.0100 to 0.0170	9°	30°	173	0.381
20	47.650	1.876	1.400	0.0551	1.020	0.0402	0.254 to 0.432	0.0100 to 0.0170	5.5°	30°	240	0.528
24	58.750	2.313	1.400	0.0551	1.020	0.0402	0.254 to 0.432	0.0100 to 0.0170	5.5°	30°	439	0.966
28	68.280	2.688	1.400	0.0551	1.020	0.0402	0.254 to 0.432	0.0100 to 0.0170	5.5°	30°	668	1.470
32	77.830	3.064	1.400	0.0551	1.020	0.0402	0.254 to 0.432	0.0100 to 0.0170	5°	30°	980	2.156

Schematic Drawing

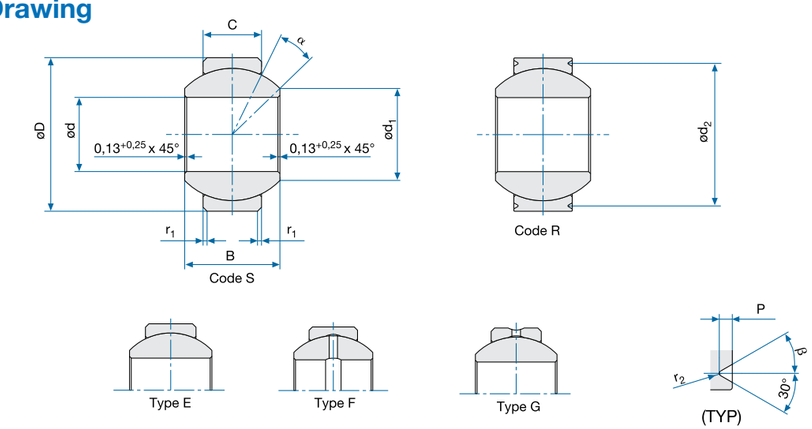

Specifications

EN6046

Diameter Code	Radial Play Normal / Code N		Radial Play Normal / Code P		Axial Play Normal / Code N (max.)		Axial Play Reduced / Code P (max.)		Static Radial Limit Load	
	mm	Inch	mm	Inch	mm	Inch	mm	Inch	kN	lbs
03	0.010 to 0.030	0.0004 to 0.0012	0.002 to 0.010	0.0001 to 0.0004	0.120	0.0047	0.035	0.0014	16.7	3754.2
04	0.010 to 0.030	0.0004 to 0.0012	0.002 to 0.010	0.0001 to 0.0004	0.120	0.0047	0.035	0.0014	31.2	7013.8
05	0.010 to 0.030	0.0004 to 0.0012	0.002 to 0.010	0.0001 to 0.0004	0.120	0.0047	0.035	0.0014	46.5	10453.2
06	0.010 to 0.030	0.0004 to 0.0012	0.002 to 0.010	0.0001 to 0.0004	0.120	0.0047	0.035	0.0014	53.2	11959.4
07	0.010 to 0.030	0.0004 to 0.0012	0.002 to 0.010	0.0001 to 0.0004	0.120	0.0047	0.035	0.0014	65.7	14769.4
08	0.010 to 0.050	0.0004 to 0.0020	0.002 to 0.010	0.0001 to 0.0004	0.229	0.0090	0.035	0.0014	87.4	19647.5
09	0.010 to 0.050	0.0004 to 0.0020	0.003 to 0.012	0.0001 to 0.0005	0.229	0.0090	0.040	0.0016	111.8	25132.6
10	0.010 to 0.050	0.0004 to 0.0020	0.003 to 0.012	0.0001 to 0.0005	0.229	0.0090	0.040	0.0016	144.6	32506.1
12	0.010 to 0.050	0.0004 to 0.0020	0.004 to 0.015	0.0002 to 0.0006	0.229	0.0090	0.050	0.0020	202.3	45477.0
14	0.010 to 0.050	0.0004 to 0.0020	0.004 to 0.015	0.0002 to 0.0006	0.229	0.0090	0.050	0.0020	273.4	61460.3
16	0.010 to 0.050	0.0004 to 0.0020	0.004 to 0.015	0.0002 to 0.0006	0.229	0.0090	0.050	0.0020	360.3	80995.4
20	0.010 to 0.050	0.0004 to 0.0020	0.004 to 0.015	0.0002 to 0.0006	0.229	0.0090	0.050	0.0020	522.5	117458.0
24	0.010 to 0.050	0.0004 to 0.0020	0.004 to 0.015	0.0002 to 0.0006	0.229	0.0090	0.050	0.0020	796.4	179030.7
28	0.010 to 0.050	0.0004 to 0.0020	0.004 to 0.015	0.0002 to 0.0006	0.229	0.0090	0.050	0.0020	1051.5	236377.2
32	0.010 to 0.050	0.0004 to 0.0020	0.005 to 0.020	0.0002 to 0.0008	0.229	0.0090	0.060	0.0024	1448.4	325600.3

Designation

EN6046
Number of Standard

A
Grease Type
A: NATO G 354 / MIL-PRF-23827
B: NATO G 395 / MIL-PRF-81322

P
Radial / Axial Play
N: Normal
P: Reduced

16
Diameter Code

E
Type of Lubrication Grooves and Holes
E, F, G: See Schematic Drawing

R
Type of Mounting Grooves
S: Without Mounting Grooves
R: With Mounting Grooves

Z
Surface Treatment
None: Passivated
Z: Outer Ring Cadmium Plated

Part Number Example
EN6046 A P 16 E R Z

Bearing Materials:

Outer Ring
EN3161 / 1.4548 / 17-4 PH H1150

Inner Ring
EN2030 / 1.3544.9 / AISI 440C

Technical Specification
EN2337 / Outer Ring Raceway Treated with MoS2 Dry Film Lubrication

** Inch dimensions are for reference only. | * Permanently marked in non-functional area.*

Contact

USA: KAMATICS CORPORATION 1330 Blue Hills Avenue Bloomfield, CT 06002 USA | **Tel:** +1 860 243 9704 | **E-mail:** KSB@kaman.com
GERMANY: RWG GERMANY GmbH Medbacher Weg 1 D-91315 Höchstadt a. d. Aisch | **Tel:** +49 (91 93) 50105 100 | **E-mail:** RWG@kaman.com

Spherical Bearings

EN6097

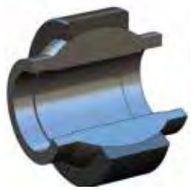

- Greased
- CRES

Specifications

Diameter Code	d		Δ dmp		D		Δ Dmp		B		C		d_1	
									–0.050	–0.0020	+0.250	+0.0098	-0.200	-0.0079
	mm	Inch	mm	Inch	mm	Inch	mm	Inch	mm	Inch	mm	Inch	mm	Inch
03	4.826	0.1900	-0.013	-0.0005	14.288	0.5625	-0.008	-0.0003	12.700	0.500	5.210	0.205	8.000	0.3150
04	6.350	0.2500	-0.013	-0.0005	18.796	0.7400	-0.008	-0.0003	15.060	0.593	6.350	0.250	9.700	0.3819
05	7.938	0.3125	-0.013	-0.0005	23.012	0.9060	-0.008	-0.0003	20.650	0.813	8.640	0.340	12.850	0.5059
06	9.525	0.3750	-0.013	-0.0005	23.012	0.9060	-0.009	-0.0004	20.650	0.813	8.640	0.340	13.250	0.5217
07	11.113	0.4375	-0.013	-0.0005	25.400	1.0000	-0.009	-0.0004	22.230	0.875	8.640	0.340	15.540	0.6118
08	12.700	0.5000	-0.013	-0.0005	28.575	1.1250	-0.009	-0.0004	23.800	0.937	10.060	0.396	18.290	0.7201
10	15.875	0.6250	-0.013	-0.0005	34.925	1.3750	-0.009	-0.0004	30.480	1.200	14.280	0.562	21.540	0.8480
12	19.050	0.7500	-0.013	-0.0005	39.688	1.5625	-0.011	-0.0004	32.510	1.280	15.620	0.615	24.260	0.9551
14	22.225	0.8750	-0.013	-0.0005	44.450	1.7500	-0.011	-0.0004	35.560	1.400	15.750	0.620	28.300	1.1142
16	25.400	1.0000	-0.013	-0.0005	53.975	2.1250	-0.013	-0.0005	47.630	1.875	21.080	0.830	32.050	1.2618
20	31.750	1.2500	-0.013	-0.0005	63.500	2.5000	-0.013	-0.0005	47.630	1.875	25.400	1.000	38.510	1.5161
24	38.100	1.5000	-0.013	-0.0005	76.200	3.0000	-0.013	-0.0005	57.150	2.250	29.720	1.170	45.500	1.7913
28	44.450	1.7500	-0.013	-0.0005	90.488	3.5625	-0.013	-0.0005	73.030	2.875	31.750	1.250	51.500	2.0276

Diameter Code	d_2		P		r_1 x 45°		r_2		r_4 x 45°		P		α	ß
	-0.200	-0.0079	-0.250	-0.0098	-0.200	-0.0079	+ 0.180	+0.0071	+ 0.200	+0.0079	-0.250	-0.0098		
	mm	Inch	mm	Inch	mm	Inch	mm	Inch	mm	Inch	mm	Inch		
03	12.650	0.4980	0.640	0.0252	0.600	0.0236	0.130	0.0051	0.130	0.0051	0.640	0.0252	15°	20°
04	17.170	0.6760	0.640	0.0252	0.600	0.0236	0.130	0.0051	0.130	0.0051	0.640	0.0252	24°	20°
05	21.390	0.8421	0.640	0.0252	0.600	0.0236	0.130	0.0051	0.130	0.0051	0.640	0.0252	23°	30°
06	21.390	0.8421	0.640	0.0252	0.700	0.0276	0.130	0.0051	0.130	0.0051	0.640	0.0252	21.5°	30°
07	22.810	0.8980	0.890	0.0350	0.700	0.0276	0.250	0.0098	0.130	0.0051	0.890	0.0350	22°	30°
08	25.980	1.0228	0.890	0.0350	0.700	0.0276	0.250	0.0098	0.130	0.0051	0.890	0.0350	20°	30°
10	32.330	1.2728	0.890	0.0350	0.700	0.0276	0.250	0.0098	0.130	0.0051	0.890	0.0350	20°	30°
12	36.500	1.4370	1.400	0.0551	1.000	0.0394	0.250	0.0098	0.130	0.0051	1.400	0.0551	19°	30°
14	41.280	1.6252	1.400	0.0551	1.000	0.0394	0.250	0.0098	0.130	0.0051	1.400	0.0551	19°	30°
16	50.800	2.0000	1.400	0.0551	1.000	0.0394	0.250	0.0098	0.130	0.0051	1.400	0.0551	21°	30°
20	60.330	2.3752	1.400	0.0551	1.000	0.0394	0.250	0.0098	0.130	0.0051	1.400	0.0551	21°	30°
24	73.030	2.8752	1.400	0.0551	1.000	0.0394	0.250	0.0098	0.130	0.0051	1.400	0.0551	21°	30°
28	87.320	3.4378	1.400	0.0551	1.000	0.0394	0.250	0.0098	0.130	0.0051	1.400	0.0551	28.5°	30°

Bearing Materials:

Outer Ring
EN3161 / 1.4548 / 17-4 PH H1150

Inner Ring
EN3020 / 1.3544.9 / AISI 440C

Technical Specification
EN2337 / Outer Ring Raceway Treated with MoS_2 Dry Film Lubrication

Schematic Drawing

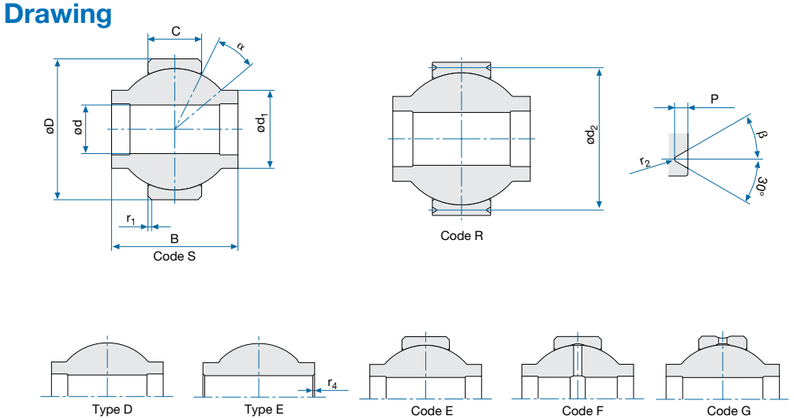

Specifications

EN6097

Diameter Code	Radial Play Normal / Code N		Radial Play Reduced / Code X		Axial Play Normal / Code N (max.)		Axial Play Reduced / Code X (max.)		Weight	
	mm	Inch	mm	Inch	mm	Inch	mm	Inch	g	lbs
03	0.010 to 0.030	0.0004 to 0.0012	0.002 to 0.010	0.0001 to 0.0004	0.120	0.0047	0.035	0.0014	8	0.018
04	0.010 to 0.030	0.0004 to 0.0012	0.002 to 0.010	0.0001 to 0.0004	0.120	0.0047	0.035	0.0014	17	0.037
05	0.010 to 0.030	0.0004 to 0.0012	0.002 to 0.010	0.0001 to 0.0004	0.120	0.0047	0.035	0.0014	36	0.079
06	0.010 to 0.030	0.0004 to 0.0012	0.002 to 0.010	0.0001 to 0.0004	0.120	0.0047	0.035	0.0014	33	0.073
07	0.010 to 0.030	0.0004 to 0.0012	0.002 to 0.010	0.0001 to 0.0004	0.120	0.0047	0.035	0.0014	42	0.092
08	0.010 to 0.050	0.0004 to 0.0020	0.002 to 0.010	0.0001 to 0.0004	0.230	0.0091	0.035	0.0014	61	0.134
10	0.010 to 0.050	0.0004 to 0.0020	0.003 to 0.012	0.0001 to 0.0005	0.230	0.0091	0.040	0.0016	117	0.257
12	0.010 to 0.050	0.0004 to 0.0020	0.004 to 0.015	0.0002 to 0.0006	0.230	0.0091	0.050	0.0020	153	0.337
14	0.010 to 0.050	0.0004 to 0.0020	0.004 to 0.015	0.0002 to 0.0006	0.230	0.0091	0.050	0.0020	198	0.436
16	0.010 to 0.050	0.0004 to 0.0020	0.004 to 0.015	0.0002 to 0.0006	0.230	0.0091	0.050	0.0020	390	0.858
20	0.010 to 0.050	0.0004 to 0.0020	0.004 to 0.015	0.0002 to 0.0006	0.230	0.0091	0.050	0.0020	595	1.309
24	0.010 to 0.050	0.0004 to 0.0020	0.004 to 0.015	0.0002 to 0.0006	0.230	0.0091	0.050	0.0020	1020	2.244
28	0.010 to 0.050	0.0004 to 0.0020	0.004 to 0.015	0.0002 to 0.0006	0.230	0.0091	0.050	0.0020	1740	3.828

Diameter Code	Static Radial Limit Load (code E only)		Static Axial Limit Load (code E only)	
	kN	lbs	kN	lbs
03	9.4	2113.1	5.0	1124.0
04	18.0	4046.4	8.4	1888.3
05	25.7	5777.4	18.3	4113.8
06	44.4	9981.1	18.3	4113.8
07	65.5	14724.4	17.0	3821.6
08	91.3	20524.2	24.8	5575.0
10	139.2	31292.2	56.5	12701.2
12	225.5	50692.4	64.3	14454.6
14	277.6	62404.5	65.6	14746.9
16	364.8	82007.0	127.7	28707.0
20	700.3	157427.4	193.1	43408.9
24	987.0	221877.6	272.0	61145.6
28	1275.1	286642.5	313.8	70542.2

Designation

EN6097
Number of Standard

S
Type of Mounting
S: Without Mounting Grooves
R: With Mounting Grooves

06
Diameter Code

N
Radial / Axial Play
N: Normal
X: Reduced

T
Surface Treatment
T: Passivated
P: Outer Ring Cadmium Plated

E
Type of Ball ID
E, D: See Schematic Drawing

B
Grease Type
A: MIL-PRF-23827 / NATO G 354
B: MIL-PRF-81322 / NATO G 395

E
Type of Lubrication Grooves and Holes
E, F, G: See Schematic

Part Number Example
EN6097 S 06 N T E B E

** Inch dimensions are for reference only. | * Permanently marked in non-functional area.*

Contact

USA: KAMATICS CORPORATION 1330 Blue Hills Avenue Bloomfield, CT 06002 USA | **Tel:** +1 860 243 9704 | **E-mail:** KSB@kaman.com
GERMANY: RWG GERMANY GmbH Medbacher Weg 1 D-91315 Höchstadt a. d. Aisch | **Tel:** +49 (91 93) 50105 100 | **E-mail:** RWG@kaman.com

Spherical Bearings

FMGB... .3

- Greased
- CRES

Specifications

Diameter Code	d		Δ dmp		D		Δ Dmp		B		C		d_1 (min.)	
									–0.127	–0.0050	+0.254	+0.0100		
	mm	Inch	mm	Inch	mm	Inch	mm	Inch	mm	Inch	mm	Inch	mm	Inch
3.3	4.826	0.1900	-0.012	-0.0005	15.875	0.6250	-0.012	-0.0005	11.100	0.4370	8.179	0.3220	7.660	0.3016
4.3	6.350	0.2500	-0.012	-0.0005	15.875	0.6250	-0.012	-0.0005	11.100	0.4370	8.179	0.3220	7.660	0.3016
5.3	7.937	0.3125	-0.012	-0.0005	17.462	0.6875	-0.012	-0.0005	11.100	0.4370	7.925	0.3120	10.181	0.4008
6.3	9.525	0.3750	-0.012	-0.0005	20.637	0.8125	-0.012	-0.0005	12.700	0.5000	10.185	0.4010	11.967	0.4711
7.3	11.112	0.4375	-0.012	-0.0005	23.812	0.9375	-0.012	-0.0005	14.275	0.5620	11.100	0.4370	13.774	0.5423
8.3	12.700	0.5000	-0.012	-0.0005	25.400	1.0000	-0.012	-0.0005	15.875	0.6250	12.700	0.5000	15.554	0.6124
9.3	14.287	0.5625	-0.012	-0.0005	28.575	1.1250	-0.012	-0.0005	17.450	0.6870	13.487	0.5310	18.457	0.7267
10.3	15.875	0.6250	-0.012	-0.0005	30.162	1.1875	-0.012	-0.0005	19.050	0.7500	14.275	0.5620	19.098	0.7519
12.3	19.050	0.7500	-0.012	-0.0005	34.925	1.3750	-0.012	-0.0005	22.225	0.8750	15.875	0.6250	22.674	0.8927
14.3	22.225	0.8750	-0.012	-0.0005	41.275	1.6250	-0.012	-0.0005	22.225	0.8750	19.050	0.7500	26.941	1.0607
16.3	25.400	1.0000	-0.012	-0.0005	53.975	2.1250	-0.012	-0.0005	34.925	1.3750	25.400	1.0000	32.378	1.2747
20.3	31.750	1.2500	-0.012	-0.0005	60.325	2.3750	-0.012	-0.0005	38.100	1.5000	28.575	1.1250	37.075	1.4596
24.3	38.100	1.5000	-0.012	-0.0005	68.262	2.6875	-0.012	-0.0005	42.850	1.6870	30.937	1.2180	45.500	1.7913
28.3	44.450	1.7500	-0.012	-0.0005	76.200	3.0000	-0.012	-0.0005	46.024	1.8120	33.325	1.3120	49.878	1.9637
32.3	50.800	2.0000	-0.012	-0.0005	82.550	3.2500	-0.012	-0.0005	49.199	1.9370	34.925	1.3750	56.075	2.2077

Diameter Code	d_2		P		r_2		Axial Play normal (max.)		Axial Play reduced 1 / Code X (max.)		α
	-0.254	-0.0100	-0.381	-0.0100	+0.254	-0.0100					
	mm	Inch	mm	Inch	mm	Inch	mm	Inch	mm	Inch	
3.3	14.351	0.5650	0.762	0.0300	0.127	0.0050	0.229	0.0090	0.080	0.0031	17°
4.3	14.351	0.5650	0.762	0.0300	0.127	0.0050	0.229	0.0090	0.080	0.0031	17°
5.3	15.926	0.6270	0.762	0.0300	0.127	0.0050	0.229	0.0090	0.080	0.0031	14°
6.3	18.135	0.7140	1.016	0.0400	0.254	0.0100	0.229	0.0090	0.080	0.0031	10°
7.3	21.310	0.8390	1.016	0.0400	0.254	0.0100	0.229	0.0090	0.080	0.0031	12°
8.3	22.911	0.9020	1.016	0.0400	0.254	0.0100	0.229	0.0090	0.080	0.0031	9°
9.3	26.086	1.0270	1.016	0.0400	0.254	0.0100	0.229	0.0090	0.080	0.0031	11°
10.3	27.661	1.0890	1.016	0.0400	0.254	0.0100	0.229	0.0090	0.080	0.0031	12°
12.3	31.826	1.2530	1.524	0.0600	0.254	0.0100	0.229	0.0090	0.080	0.0031	14°
14.3	38.176	1.5030	1.524	0.0600	0.254	0.0100	0.229	0.0090	0.080	0.0031	7°
16.3	50.876	2.0030	1.524	0.0600	0.254	0.0100	0.229	0.0090	0.080	0.0031	15°
20.3	57.227	2.2530	1.524	0.0600	0.254	0.0100	0.229	0.0090	0.080	0.0031	13°
24.3	65.164	2.5655	1.524	0.0600	0.254	0.0100	0.229	0.0090	0.080	0.0031	15°
28.3	73.102	2.8780	1.524	0.0600	0.254	0.0100	0.229	0.0090	0.080	0.0031	14°
32.3	79.452	3.1280	1.524	0.0600	0.254	0.0100	0.229	0.0090	0.080	0.0031	14°

Schematic Drawing

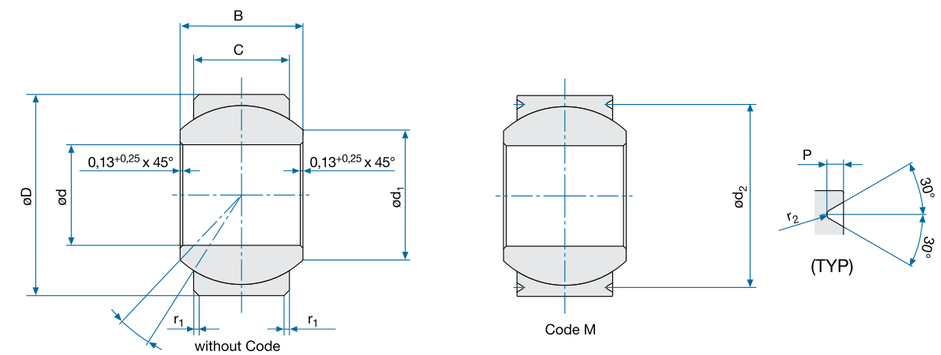

Specifications

FMGB... .3

Diameter Code	Axial Play reduced 2 / Code A		Axial Play reduced 3 / Code AX (max.)		Static Radial Limit Load		Static Axial Limit Load		Weight	
	mm	Inch	mm	Inch	kN	lbs	kN	lbs	g	lbs
3.3	0.030 to 0.060	0.0012 to 0.0024	0.030	0.0012	52.0	11689.6	24.8	5575.0	14	0.031
4.3	0.030 to 0.060	0.0012 to 0.0024	0.030	0.0012	52.0	11689.6	24.8	5575.0	14	0.031
5.3	0.030 to 0.060	0.0012 to 0.0024	0.030	0.0012	68.5	15398.8	28.3	6361.8	16	0.035
6.3	0.030 to 0.060	0.0012 to 0.0024	0.030	0.0012	107.6	24188.5	49.4	11105.1	22	0.048
7.3	0.030 to 0.060	0.0012 to 0.0024	0.030	0.0012	138.7	31179.8	60.8	13667.8	36	0.079
8.3	0.030 to 0.060	0.0012 to 0.0024	0.030	0.0012	183.6	41273.3	82.3	18501.0	45	0.099
9.3	0.030 to 0.060	0.0012 to 0.0024	0.030	0.0012	230.3	51771.4	96.0	21580.8	61	0.134
10.3	0.030 to 0.060	0.0012 to 0.0024	0.030	0.0012	263.6	59257.3	109.0	24503.2	72	0.158
12.3	0.030 to 0.060	0.0012 to 0.0024	0.030	0.0012	355.6	79938.9	139.5	31359.6	104	0.229
14.3	0.030 to 0.060	0.0012 to 0.0024	0.030	0.0012	475.6	106914.9	204.1	45881.7	158	0.348
16.3	0.030 to 0.060	0.0012 to 0.0024	0.030	0.0012	880.2	197869.0	368.3	82793.84	440	0.968
20.3	0.030 to 0.060	0.0012 to 0.0024	0.030	0.0012	1102.4	247819.5	465.1	104554.48	499	1.098
24.3	0.030 to 0.060	0.0012 to 0.0024	0.030	0.0012	1364.7	306784.6	531	119368.8	762	1.676
28.3	0.030 to 0.060	0.0012 to 0.0024	0.030	0.0012	1644.8	369751.0	635.1	142770.5	838	1.844
32.3	0.030 to 0.060	0.0012 to 0.0024	0.030	0.0012	1889.2	424692.16	694.6	156146.1	975	2.145

Designation

FMGB
Bearing Number

6
Diameter Code

.3
Material
See Bearing Materials on Right

M
Type of Mounting
None: Without Mounting Grooves
M: With Mounting Grooves

AX
Axial Play
None: Normal, X: Reduced 1,
A: Reduced 2, AX: Reduced 3

.6
Outer Ring Raceway Treated With MoS_2 Dry Film Lubrication

Part Number Example
FMGB 6 .3 M AX .6

Bearing Materials:

Outer Ring
1.4548.4 / 17-4 PH H1025

Inner Ring
EN2030 / 1.3544.9 / AISI 440C

Lubrication
Grease per NATO G354 / MIL-PRF-23827

Technical Specification
SAE AS8976

** Inch dimensions are for reference only. | * Permanently marked in non-functional area.*

Contact

USA: KAMATICS CORPORATION 1330 Blue Hills Avenue Bloomfield, CT 06002 USA | **Tel:** +1 860 243 9704 | **E-mail:** KSB@kaman.com
GERMANY: RWG GERMANY GmbH Medbacher Weg 1 D-91315 Höchstadt a. d. Aisch | **Tel:** +49 (91 93) 50105 100 | **E-mail:** RWG@kaman.com

Spherical Bearings

FMGN... .1

- Greased
- Bronze / Steel / CRES
- Dimensions According to AS21154

Specifications

Diameter Code	d		Δ dmp		D		Δ Dmp		B		Δ Bmp		C	
	mm	Inch	mm	Inch	mm	Inch	mm	Inch	mm	Inch	mm	Inch	mm	Inch
03	4.826	0.1900	-0.012	-0.0005	14.287	0.5625	-0.012	-0.0005	7.137	0.2810	-0.051	-0.0020	5.537	0.2180
04	6.350	0.2500	-0.012	-0.0005	16.667	0.6562	-0.012	-0.0005	8.712	0.3430	-0.051	-0.0020	6.350	0.2500
05	7.937	0.3125	-0.012	-0.0005	19.050	0.7500	-0.012	-0.0005	9.525	0.3750	-0.051	-0.0020	7.137	0.2810
06	9.525	0.3750	-0.012	-0.0005	20.637	0.8125	-0.012	-0.0005	10.312	0.4060	-0.051	-0.0020	7.925	0.3120
07	11.112	0.4375	-0.012	-0.0005	23.017	0.9062	-0.012	-0.0005	11.100	0.4370	-0.051	-0.0020	8.712	0.3430
08	12.700	0.5000	-0.012	-0.0005	25.400	1.0000	-0.012	-0.0005	12.700	0.5000	-0.051	-0.0020	9.906	0.3900
09	14.287	0.5625	-0.012	-0.0005	27.780	1.0937	-0.012	-0.0005	14.275	0.5620	-0.051	-0.0020	11.100	0.4370
10	15.875	0.6250	-0.012	-0.0005	30.162	1.1875	-0.012	-0.0005	15.875	0.6250	-0.051	-0.0020	12.700	0.5000
12	19.050	0.7500	-0.012	-0.0005	36.512	1.4375	-0.012	-0.0005	19.050	0.7500	-0.051	-0.0020	15.062	0.5930
14	22.225	0.8750	-0.012	-0.0005	39.687	1.5625	-0.012	-0.0005	22.225	0.8750	-0.051	-0.0020	17.856	0.7030
16	25.400	1.0000	-0.012	-0.0005	44.450	1.7500	-0.012	-0.0005	25.400	1.0000	-0.051	-0.0020	20.244	0.7970
20	31.750	1.2500	-0.012	-0.0005	50.800	2.0000	-0.012	-0.0005	27.762	1.0930	-0.051	-0.0020	23.926	0.9420
24	38.100	1.5000	-0.012	-0.0005	61.913	2.4375	-0.012	-0.0005	33.325	1.3120	-0.051	-0.0020	28.702	1.1300
28	44.450	1.7500	-0.012	-0.0005	71.437	2.8125	-0.012	-0.0005	38.887	1.5310	-0.051	-0.0020	33.452	1.3170
32	50.800	2.0000	-0.012	-0.0005	80.963	3.1875	-0.012	-0.0005	44.450	1.7500	-0.051	-0.0020	38.227	1.5050

Schematic Drawing

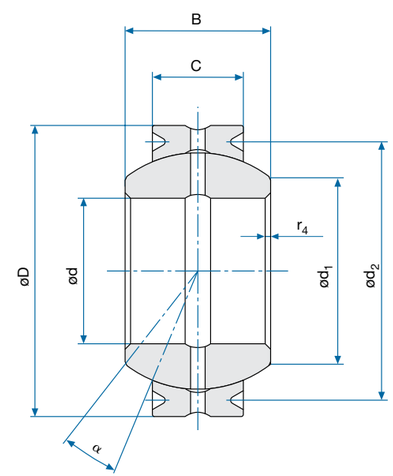

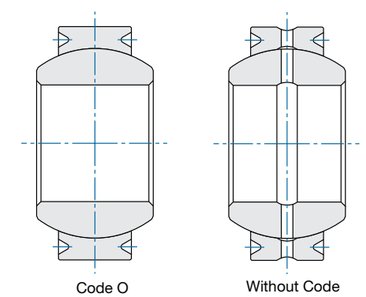

Specifications

FMGN... .1

Diameter Code	Δ Cmp		d_1 (min.)		d_2		P		r_2		Radial Play reduced 1 / Code A	
					-0.254	-0.0100	-0.381	-0.0150	+0.254	+0.0100		
	mm	Inch	mm	Inch	mm	Inch	mm	Inch	mm	Inch		
03	±0.127	±0.0050	7.492	0.2950	12.750	0.5020	0.762	0.0300	0.127	0.0050	0.010 to 0.050	0.0004 to 0.0020
04	±0.127	±0.0050	9.288	0.3657	15.140	0.5961	0.762	0.0300	0.127	0.0050	0.010 to 0.050	0.0004 to 0.0020
05	±0.127	±0.0050	11.709	0.4610	16.560	0.6520	1.016	0.0400	0.254	0.0100	0.010 to 0.050	0.0004 to 0.0020
06	±0.127	±0.0050	13.127	0.5168	18.140	0.7142	1.016	0.0400	0.254	0.0100	0.010 to 0.050	0.0004 to 0.0020
07	±0.127	±0.0050	14.509	0.5712	20.520	0.8079	1.016	0.0400	0.254	0.0100	0.010 to 0.050	0.0004 to 0.0020
08	±0.127	±0.0050	16.322	0.6426	22.300	0.8780	1.524	0.0600	0.254	0.0100	0.010 to 0.050	0.0004 to 0.0020
09	±0.127	±0.0050	18.097	0.7125	24.690	0.9720	1.524	0.0600	0.254	0.0100	0.010 to 0.050	0.0004 to 0.0020
10	±0.127	±0.0050	18.818	0.7409	27.050	1.0650	1.524	0.0600	0.254	0.0100	0.010 to 0.050	0.0004 to 0.0020
12	±0.127	±0.0050	23.410	0.9217	33.400	1.3150	1.524	0.0600	0.254	0.0100	0.010 to 0.050	0.0004 to 0.0020
14	±0.127	±0.0050	24.817	0.9770	36.580	1.4402	1.524	0.0600	0.254	0.0100	0.010 to 0.050	0.0004 to 0.0020
16	±0.127	±0.0050	28.443	1.1198	41.350	1.6280	1.524	0.0600	0.254	0.0100	0.010 to 0.050	0.0004 to 0.0020
20	±0.127	±0.0050	35.757	1.4078	47.700	1.8780	1.524	0.0600	0.254	0.0100	0.010 to 0.050	0.0004 to 0.0020
24	±0.127	±0.0050	41.253	1.6241	58.810	2.3154	1.524	0.0600	0.254	0.0100	0.010 to 0.050	0.0004 to 0.0020
28	±0.127	±0.0050	50.720	1.9969	68.330	2.6902	1.524	0.0600	0.254	0.0100	0.010 to 0.050	0.0004 to 0.0020
32	±0.127	±0.0050	57.977	2.2826	77.850	3.0650	1.524	0.0600	0.254	0.0100	0.010 to 0.050	0.0004 to 0.0020

FMGN... .1 continued on pg 136. ►

Specifications

FMGN… .1

Diameter Code	Radial Play reduced 2 / Code AX		Axial Play reduced 1 / Code A (max.)		Axial Play reduced 2 / Code AX (max.)		Weight		α
	mm	Inch	mm	Inch	mm	Inch	g	lbs	
03	0.010 to 0.030	0.0004 to 0.0012	0.229	0.0090	0.080	0.0031	6	0.013	10°
04	0.010 to 0.030	0.0004 to 0.0012	0.229	0.0090	0.080	0.0031	10	0.022	10°
05	0.010 to 0.030	0.0004 to 0.0012	0.229	0.0090	0.080	0.0031	13	0.029	10°
06	0.010 to 0.030	0.0004 to 0.0012	0.229	0.0090	0.080	0.0031	17	0.037	9°
07	0.010 to 0.030	0.0004 to 0.0012	0.229	0.0090	0.080	0.0031	21	0.046	8°
08	0.010 to 0.030	0.0004 to 0.0012	0.229	0.0090	0.080	0.0031	29	0.064	8°
09	0.010 to 0.030	0.0004 to 0.0012	0.229	0.0090	0.080	0.0031	39	0.086	8°
10	0.010 to 0.030	0.0004 to 0.0012	0.229	0.0090	0.080	0.0031	49	0.108	8°
12	0.010 to 0.030	0.0004 to 0.0012	0.229	0.0090	0.080	0.0031	92	0.202	8°
14	0.010 to 0.030	0.0004 to 0.0012	0.229	0.0090	0.080	0.0031	118	0.260	8°
16	0.010 to 0.030	0.0004 to 0.0012	0.229	0.0090	0.080	0.0031	174	0.383	9°
20	0.010 to 0.030	0.0004 to 0.0012	0.229	0.0090	0.080	0.0031	240	0.528	6°
24	0.010 to 0.030	0.0004 to 0.0012	0.229	0.0090	0.080	0.0031	435	0.957	6°
28	0.010 to 0.030	0.0004 to 0.0012	0.229	0.0090	0.080	0.0031	671	1.476	6°
32	0.010 to 0.030	0.0004 to 0.0012	0.229	0.0090	0.080	0.0031	953	2.097	6°

Diameter Code	Static Axial Limit Load					
	Normal		Code 1		Code 3	
	kN	lbs	kN	lbs	kN	lbs
03	3.78	849.7	9.3	2099.6	12.9	2899.9
04	4.89	1099.3	12.5	2798.8	16.7	3754.2
05	6.23	1400.5	15.8	3549.6	26.2	5889.8
06	7.83	1760.2	19.6	4399.3	30.0	6744.0
07	9.56	2149.1	24.0	5399.7	37.7	8475.0
08	12.45	2798.8	31.4	7049.7	48.5	10902.8
09	15.79	3549.6	39.6	8899.8	58.7	13195.8
10	20.68	4648.9	52.0	11698.6	80.6	18118.9
12	29.25	6575.4	73.4	16498.1	123.8	27830.2
14	41.37	9300.0	103.6	23298.3	171.1	38463.3
16	53.38	11999.8	133.4	29997.3	215.6	48466.9
20	73.90	16612.7	118.8	26706.2	328.0	73734.4
24	103.80	23334.2	166.9	37519.1	495.0	111276.0
28	145.90	32798.3	234.5	52715.6	644.9	144973.5
32	190.60	42846.9	306.3	68856.2	845.1	189978.5

Specifications

FMGN… .1

Diameter Code	Static Radial Limit Load					
	Normal		Code 1		Code 3	
	kN	lbs	kN	lbs	kN	lbs
03	12.5	2798.8	20.5	4599.4	28.4	6384.3
04	19.1	4298.2	31.5	7081.2	41.7	9374.2
05	23.1	5197.4	37.8	8497.4	60.4	13577.9
06	30.0	6748.5	49.2	11048.9	75.1	16882.5
07	37.8	8497.4	61.8	13897.1	94.2	21176.2
08	51.2	11498.5	83.8	18847.2	126.2	28369.8
09	69.4	15596.6	113.4	25496.8	164.5	36979.6
10	86.7	19496.9	142.1	31946.3	217.8	48961.4
12	126.8	28495.6	207.9	46744.9	346.7	77938.2
14	170.4	38294.7	279.2	62752.9	471.0	105880.8
16	226.5	50912.7	370.7	83342.4	582.3	130901.0
20	303.1	68125.6	487.1	109488.8	787.3	176985.0
24	425.9	95742.3	684.5	153875.6	1138.7	255979.8
28	598.4	134509.1	961.6	216167.7	1547.9	347967.9
32	781.6	175703.7	1256.2	282393.8	2028.3	455961.8

Designation

FMGN
Bearing Number

5
Diameter Code

.1
Material

O
Type of Lubrication Grooves and Holes
None: With Lubrication Grooves and Holes
O: Without Lubrication Grooves and Holes

AX
Radial / Axial Play
None: Radial Play 0.013-0.051,
A: Reduced 1,
AX:Reduced 2

.6
Outer Ring Raceway Treated With MoS_2 Dry Film Lubrication

Part Number Example
FMGN 5 .1 O AX .6

Bearing Materials:

Outer Ring
None: Aluminium Bronze UNS C63000 / 2.0966 Cadmium Plated
.1: Heat Treatable Steel EN2214 / 1.7734.6 Cadmium Plated
.3: CRES 1.4548.4 / 17-4 PH H1025

Inner Ring
None: EN2031 / 1.3505.9 / AISI E52100 Chromium Plated
.1: EN2031 / 1.3505.9 / AISI E52100 Chromium Plated
.3: EN2030 / 1.3544.9 / AISI 440C

Lubrication
Grease per NATO G353 / MIL-G-21164

Technical Specification
SAE AS8976

** Inch dimensions are for reference only. | * Permanently marked in non-functional area.*

Contact

USA: KAMATICS CORPORATION 1330 Blue Hills Avenue Bloomfield, CT 06002 USA | **Tel:** +1 860 243 9704 | **Email:** KSB@kaman.com
GERMANY: RWG GERMANY GmbH Medbacher Weg 1 D-91315 Höchstadt a. d. Aisch | **Tel:** +49 (91 93) 50105 100 | **E-Mail:** RWG@kaman.com

Spherical Bearings

FMGS...

- Greased
- Bronze / Steel / CRES

Specifications

Diameter Code	d		Δ dmp		D		Δ Dmp		B		Δ Bmp		C	
	mm	Inch	mm	Inch	mm	Inch	mm	Inch	mm	Inch	mm	Inch	mm	Inch
03	4.826	0.1900	-0.012	-0.0005	14.287	0.5625	-0.012	-0.0005	7.137	0.2810	-0.051	-0.0020	5.537	0.2180
04	6.350	0.2500	-0.012	-0.0005	16.667	0.6562	-0.012	-0.0005	8.712	0.3430	-0.051	-0.0020	6.350	0.2500
05	7.937	0.3125	-0.012	-0.0005	19.050	0.7500	-0.012	-0.0005	9.525	0.3750	-0.051	-0.0020	7.137	0.2810
06	9.525	0.3750	-0.012	-0.0005	20.637	0.8125	-0.012	-0.0005	10.312	0.4060	-0.051	-0.0020	7.925	0.3120
07	11.112	0.4375	-0.012	-0.0005	23.017	0.9062	-0.012	-0.0005	11.100	0.4370	-0.051	-0.0020	8.712	0.3430
08	12.700	0.5000	-0.012	-0.0005	25.400	1.0000	-0.012	-0.0005	12.700	0.5000	-0.051	-0.0020	9.906	0.3900
09	14.287	0.5625	-0.012	-0.0005	27.780	1.0937	-0.012	-0.0005	14.275	0.5620	-0.051	-0.0020	11.100	0.4370
10	15.875	0.6250	-0.012	-0.0005	30.162	1.1875	-0.012	-0.0005	15.875	0.6250	-0.051	-0.0020	12.700	0.5000
12	19.050	0.7500	-0.012	-0.0005	36.512	1.4375	-0.012	-0.0005	19.050	0.7500	-0.051	-0.0020	15.062	0.5930
14	22.225	0.8750	-0.012	-0.0005	39.687	1.5625	-0.012	-0.0005	22.225	0.8750	-0.051	-0.0020	17.856	0.7030
16	25.400	1.0000	-0.012	-0.0005	44.450	1.7500	-0.012	-0.0005	25.400	1.0000	-0.051	-0.0020	20.244	0.7970
20	31.750	1.2500	-0.012	-0.0005	50.800	2.0000	-0.012	-0.0005	27.762	1.0930	-0.051	-0.0020	23.926	0.9420
24	38.100	1.5000	-0.012	-0.0005	61.913	2.4375	-0.012	-0.0005	33.325	1.3120	-0.051	-0.0020	28.702	1.1300
28	44.450	1.7500	-0.012	-0.0005	71.437	2.8125	-0.012	-0.0005	38.887	1.5310	-0.051	-0.0020	33.452	1.3170
32	50.800	2.0000	-0.012	-0.0005	80.963	3.1875	-0.012	-0.0005	44.450	1.7500	-0.051	-0.0020	38.227	1.5050

Schematic Drawing

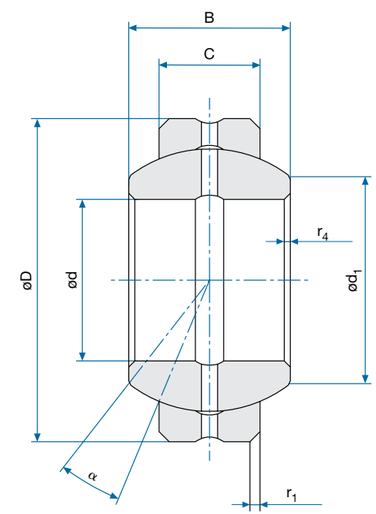

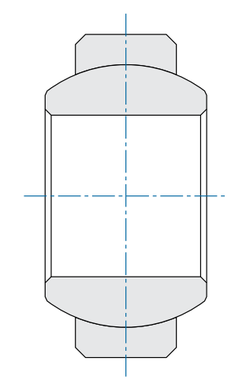

Specifications

FMGS...

Diameter Code	Δ Cmp		d_1 (min.)		r_1 x 45°		r_4 x 45°		Radial Play reduced 1 / Code A	
	mm	Inch	mm	Inch	mm	Inch	mm	Inch	mm	Inch
03	±0.127	±0.0050	7.442	0.2930	0.254	0.0100	0.127 to 0.381	.005 to .015	0.010 to 0.050	0.0004 to 0.0020
04	±0.127	±0.0050	9.246	0.3640	0.254	0.0100	0.127 to 0.381	.005 to .015	0.010 to 0.050	0.0004 to 0.0020
05	±0.127	±0.0050	10.643	0.4190	0.381	0.0150	0.127 to 0.381	.005 to .015	0.010 to 0.050	0.0004 to 0.0020
06	±0.127	±0.0050	12.065	0.4750	0.508	0.0200	0.127 to 0.381	.005 to .015	0.010 to 0.050	0.0004 to 0.0020
07	±0.127	±0.0050	13.462	0.5300	0.508	0.0200	0.127 to 0.381	.005 to .015	0.010 to 0.050	0.0004 to 0.0020
08	±0.127	±0.0050	15.240	0.6000	0.508	0.0200	0.127 to 0.381	.005 to .015	0.010 to 0.050	0.0004 to 0.0020
09	±0.127	±0.0050	17.018	0.6700	0.762	0.0300	0.127 to 0.381	.005 to .015	0.010 to 0.050	0.0004 to 0.0020
10	±0.127	±0.0050	18.771	0.7390	0.762	0.0300	0.127 to 0.381	.005 to .015	0.010 to 0.050	0.0004 to 0.0020
12	±0.127	±0.0050	23.368	0.9200	0.762	0.0300	0.127 to 0.381	.005 to .015	0.010 to 0.050	0.0004 to 0.0020
14	±0.127	±0.0050	24.892	0.9800	0.762	0.0300	0.127 to 0.381	.005 to .015	0.010 to 0.050	0.0004 to 0.0020
16	±0.127	±0.0050	28.397	1.1180	0.762	0.0300	0.127 to 0.381	.005 to .015	0.010 to 0.050	0.0004 to 0.0020
20	±0.127	±0.0050	35.757	1.4078	0.762	0.0300	0.127 to 0.381	.005 to .015	0.010 to 0.050	0.0004 to 0.0020
24	±0.127	±0.0050	41.253	1.6241	0.762	0.0300	0.127 to 0.381	.005 to .015	0.010 to 0.050	0.0004 to 0.0020
28	±0.127	±0.0050	50.720	1.9969	0.762	0.0300	0.127 to 0.381	.005 to .015	0.010 to 0.050	0.0004 to 0.0020
32	±0.127	±0.0050	57.977	2.2826	0.762	0.0300	0.127 to 0.381	.005 to .015	0.010 to 0.050	0.0004 to 0.0020

FMGS continued on pg 140. ►

Specifications

FMGS...

Diameter Code	Radial Play reduced 2 / Code AX		Axial Play reduced 1 / Code A (max.)		Axial Play reduced 2 / Code AX (max.)		Weight		α
	mm	Inch	mm	Inch	mm	Inch	g	lbs	
03	0.010 to 0.030	0.0004 to 0.0012	0.229	0.0090	0.080	0.0031	6	0.013	10°
04	0.010 to 0.030	0.0004 to 0.0012	0.229	0.0090	0.080	0.0031	10	0.022	10°
05	0.010 to 0.030	0.0004 to 0.0012	0.229	0.0090	0.080	0.0031	13	0.029	10°
06	0.010 to 0.030	0.0004 to 0.0012	0.229	0.0090	0.080	0.0031	17	0.037	9°
07	0.010 to 0.030	0.0004 to 0.0012	0.229	0.0090	0.080	0.0031	21	0.046	8°
08	0.010 to 0.030	0.0004 to 0.0012	0.229	0.0090	0.080	0.0031	29	0.064	8°
09	0.010 to 0.030	0.0004 to 0.0012	0.229	0.0090	0.080	0.0031	39	0.086	8°
10	0.010 to 0.030	0.0004 to 0.0012	0.229	0.0090	0.080	0.0031	49	0.108	8°
12	0.010 to 0.030	0.0004 to 0.0012	0.229	0.0090	0.080	0.0031	92	0.202	8°
14	0.010 to 0.030	0.0004 to 0.0012	0.229	0.0090	0.080	0.0031	118	0.260	8°
16	0.010 to 0.030	0.0004 to 0.0012	0.229	0.0090	0.080	0.0031	174	0.383	9°
20	0.010 to 0.030	0.0004 to 0.0012	0.229	0.0090	0.080	0.0031	240	0.528	6°
24	0.010 to 0.030	0.0004 to 0.0012	0.229	0.0090	0.080	0.0031	435	0.957	6°
28	0.010 to 0.030	0.0004 to 0.0012	0.229	0.0090	0.080	0.0031	671	1.476	6°
32	0.010 to 0.030	0.0004 to 0.0012	0.229	0.0090	0.080	0.0031	953	2.097	6°

Diameter Code	Static Radial Limit Load					
	Normal		Code 1		Code 3	
	kN	lbs	kN	lbs	kN	lbs
03	12.5	2798.8	20.5	4599.4	28.4	6384.3
04	19.1	4298.2	31.5	7081.2	41.7	9374.2
05	23.1	5197.4	37.8	8497.4	60.4	13577.9
06	30.0	6748.5	49.2	11048.9	75.1	16882.5
07	37.8	8497.4	61.8	13897.1	94.2	21176.2
08	51.2	11498.5	83.8	18847.2	126.2	28369.8
09	69.4	15596.6	113.4	25496.8	164.5	36979.6
10	86.7	19496.9	142.1	31946.3	217.8	48961.4
12	126.8	28495.6	207.9	46744.9	346.7	77938.2
14	170.4	38294.7	279.2	62752.9	471.0	105880.8
16	226.5	50912.7	370.7	83342.4	582.3	130901.0
20	303.1	68125.6	487.1	109488.8	787.3	176985.0
24	425.9	95742.3	684.5	153875.6	1138.7	255979.8
28	598.4	134509.1	961.6	216167.7	1547.9	347967.9
32	781.6	175703.7	1256.2	282393.8	2028.3	455961.84

Specifications

FMGS...

Diameter Code	Static Axial Limit Load					
	Normal		Code 1		Code 3	
	kN	lbs	kN	lbs	kN	lbs
03	3.78	849.7	9.3	2099.6	12.9	2899.9
04	4.89	1099.3	12.5	2798.8	16.7	3754.2
05	6.23	1400.5	15.8	3549.6	26.2	5889.8
06	7.83	1760.2	19.6	4399.3	30.0	6744.0
07	9.56	2149.1	24.0	5399.7	37.7	8475.0
08	12.45	2798.8	31.4	7049.7	48.5	10902.8
09	15.79	3549.6	39.6	8899.8	58.7	13195.8
10	20.68	4648.9	52.0	11698.6	80.6	18118.9
12	29.25	6575.4	73.4	16498.1	123.8	27830.2
14	41.37	9300.0	103.6	23298.3	171.1	38463.3
16	53.38	11999.8	133.4	29997.3	215.6	48466.9
20	73.90	16612.7	118.8	26706.2	328.0	73734.4
24	103.80	23334.2	166.9	37519.1	495.0	111276.0
28	145.90	32798.3	234.5	52715.6	644.9	144973.5
32	190.60	42846.9	306.3	68856.2	845.1	189978.5

Designation

FMGS
Bearing Number

05
Diameter Code

.1
Material

O
Type of Lubrication Grooves and Holes
None: With Lubrication Grooves and Holes
O: Without Lubrication Grooves and Holes

AX
Radial / Axial Play
None: Radial Play 0.013-0.051,
A: Reduced 1,
AX: Reduced 2

.6
Outer Ring Raceway Treated With MoS_2 Dry Film Lubrication

Part Number Example
FMGS 05 .1 O AX .6

Bearing Materials:

Outer Ring
None: Aluminium Bronze UNS C63000 / 2.0966 Cadmium Plated
.1: Heat Treatable Steel EN2214 / 1.7734.6 Cadmium Plated
.3: CRES 1.4548.4 / 17-4 PH H1025

Inner Ring
None: EN2031 / 1.3505.9 / AISI E52100 Chromium Plated
.1: EN2031 / 1.3505.9 / AISI E52100 Chromium Plated
.3: EN2030 / 1.3544.9 / AISI 440C

Lubrication
Grease per NATO G353 / MIL-G-21164

Technical Specification
MIL-B-8976

** Inch dimensions are for reference only. | * Permanently marked in non-functional area.*

Contact

USA: KAMATICS CORPORATION 1330 Blue Hills Avenue Bloomfield, CT 06002 USA | **Tel:** +1 860 243 9704 | **E-mail:** KSB@kaman.com
GERMANY: RWG GERMANY GmbH Medbacher Weg 1 D-91315 Höchstadt a. d. Aisch | **Tel:** +49 (91 93) 50105 100 | **E-mail:** RWG@kaman.com

Spherical Bearings

FMGV... .3

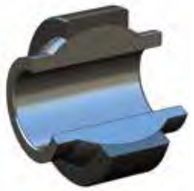

- Greased
- CRES

Specifications

Diameter Code	d		Δ dmp		D		Δ Dmp		B		C	
									–0.127	–0.0050	+0.254	+0.0100
	mm	Inch	mm	Inch	mm	Inch	mm	Inch	mm	Inch	mm	Inch
3.3	4.826	0.1900	-0.012	-0.0005	14.287	0.5625	-0.012	-0.0005	12.700	0.5000	5.207	0.2050
4.3	6.350	0.2500	-0.012	-0.0005	18.796	0.7400	-0.012	-0.0005	15.062	0.5930	6.350	0.2500
5.3	7.937	0.3125	-0.012	-0.0005	23.012	0.9060	-0.012	-0.0005	20.650	0.8130	8.636	0.3400
6.3	9.525	0.3750	-0.012	-0.0005	23.012	0.9060	-0.012	-0.0005	20.650	0.8130	8.636	0.3400
7.3	11.112	0.4375	-0.012	-0.0005	25.400	1.0000	-0.012	-0.0005	22.225	0.8750	8.636	0.3400
8.3	12.700	0.5000	-0.012	-0.0005	28.575	1.1250	-0.012	-0.0005	23.799	0.9370	10.058	0.3960
10.3	15.875	0.6250	-0.012	-0.0005	34.925	1.3750	-0.012	-0.0005	30.480	1.2000	14.275	0.5620
12.3	19.050	0.7500	-0.012	-0.0005	39.688	1.5625	-0.012	-0.0005	32.512	1.2800	15.621	0.6150
14.3	22.225	0.8750	-0.012	-0.0005	44.450	1.7500	-0.012	-0.0005	35.560	1.4000	15.748	0.6200
16.3	25.400	1.0000	-0.012	-0.0005	53.975	2.1250	-0.012	-0.0005	47.625	1.8750	21.082	0.8300
20.3	31.750	1.2500	-0.012	-0.0005	63.500	2.5000	-0.012	-0.0005	47.625	1.8750	25.400	1.0000

Diameter Code	d_1		d_2		P		r_1 x 45°		r_2		α	β
	–0.200	–0.0079	-0.200	–0.0100	–0.250	–0.0098	+ 0.25	+0.010	+0.180	+0.0071		
	mm	Inch	mm	Inch	mm	Inch	mm	Inch	mm	Inch		
3.3	7.820	0.3079	12.650	0.4980	0.640	0.0252	0.380	0.0150	0.130	0.0051	15°	20°
4.3	9.700	0.3819	17.170	0.6760	0.640	0.0252	0.380	0.0150	0.130	0.0051	24°	20°
5.3	12.850	0.5059	21.390	0.8421	0.640	0.0252	0.380	0.0150	0.130	0.0051	23°	20°
6.3	12.850	0.5059	21.390	0.8421	0.640	0.0252	0.510	0.0201	0.130	0.0051	23°	20°
7.3	15.550	0.6122	22.810	0.8980	0.890	0.0350	0.510	0.0201	0.250	0.0098	22°	30°
8.3	18.300	0.7205	25.980	1.0228	0.890	0.0350	0.510	0.0201	0.250	0.0098	20°	30°
10.3	21.550	0.8484	32.330	1.2728	0.890	0.0350	0.510	0.0201	0.250	0.0098	20°	30°
12.3	24.250	0.9547	36.500	1.4370	1.400	0.0551	0.760	0.0299	0.250	0.0098	19°	30°
14.3	28.300	1.1142	41.280	1.6252	1.400	0.0551	0.760	0.0299	0.250	0.0098	19°	30°
16.3	32.050	1.2618	50.800	2.0000	1.400	0.0551	0.760	0.0299	0.250	0.0098	21°	30°
20.3	38.500	1.5157	60.330	2.3752	1.400	0.0551	0.760	0.0299	0.250	0.0098	21°	30°

Schematic Drawing

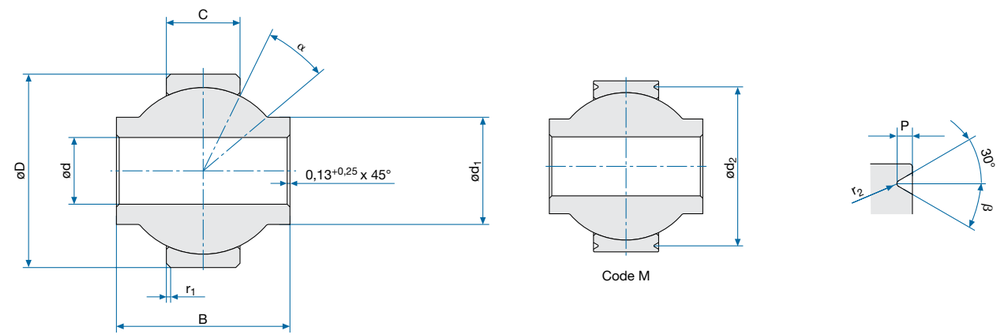

Specifications

FMGV... .3

Diameter Code	Radial Play		Axial Play (max.)		Static Radial Limit Load		Static Axial Limit Load		Weight	
	mm	Inch	mm	Inch	kN	lbs	kN	lbs	g	lbs
3.3	0.010 to 0.030	0.0004 to 0.0012	0.080	0.0031	34.7	7800.6	11.6	2607.7	9	0.020
4.3	0.010 to 0.030	0.0004 to 0.0012	0.080	0.0031	42.2	9486.6	17.2	3866.6	18	0.040
5.3	0.010 to 0.030	0.0004 to 0.0012	0.080	0.0031	72.5	16298.0	14.1	3169.7	32	0.070
6.3	0.010 to 0.030	0.0004 to 0.0012	0.080	0.0031	97.8	21985.4	14.1	3169.7	32	0.070
7.3	0.010 to 0.030	0.0004 to 0.0012	0.080	0.0031	128.9	28976.7	14.1	3169.7	46	0.101
8.3	0.010 to 0.030	0.0004 to 0.0012	0.080	0.0031	161.4	36282.7	19.2	4316.2	73	0.161
10.3	0.010 to 0.030	0.0004 to 0.0012	0.080	0.0031	257.8	57953.4	38.6	8677.3	114	0.251
12.3	0.010 to 0.030	0.0004 to 0.0012	0.080	0.0031	322.3	72453.0	46.3	10408.2	145	0.319
14.3	0.010 to 0.030	0.0004 to 0.0012	0.080	0.0031	364.5	81939.6	47.0	10565.6	195	0.429
16.3	0.010 to 0.030	0.0004 to 0.0012	0.080	0.0031	604.5	135891.6	84.3	18950.6	368	0.810
20.3	0.010 to 0.030	0.0004 to 0.0012	0.080	0.0031	871.3	195868.2	122.3	27493.0	504	1.109

Designation

FMGV
Number of Series

3.3
Diameter Code

M
With Mounting Grooves

T
Outer Ring Raceway Treated With MoS_2 Dry Film Lubrication

Part Number Example
FMGV 3.3 M T

FMGV
Number of Series

3.3
Diameter Code

.6
Outer Ring Raceway Treated With MoS_2 Dry Film Lubrication

Part Number Example
FMGV 3.3 .6

Bearing Materials:

Outer Ring
1.4548.4 / 17-4PH H1025

Inner Ring
EN2030 / 1.3544.9 / AISI 440C

Lubrication
Grease NATO G 354 / MIL-PRF-23 827

Technical Specification
SAE AS8976

** Inch dimensions are for reference only. | * Permanently marked in non-functional area.*

Contact

USA: KAMATICS CORPORATION 1330 Blue Hills Avenue Bloomfield, CT 06002 USA | **Tel:** +1 860 243 9704 | **E-mail:** KSB@kaman.com
GERMANY: RWG GERMANY GmbH Medbacher Weg 1 D-91315 Höchstadt a. d. Aisch | **Tel:** +49 (91 93) 50105 100 | **E-mail:** RWG@kaman.com

Spherical Bearings

EN2336

- Greased
- Loader Slot Type
- Carbon Steel

Specifications

Diameter Code	d		Δ dmp		D		Δ Dmp		B		Δ Bmp		α
	mm	Inch	mm	Inch	mm	Inch	mm	Inch	mm	Inch	mm	Inch	
05	5.000	0.1969	-0.008	-0.0003	14.000	0.5512	-0.008	-0.0003	6.000	0.2362	-0.060	-0.0024	13°
06	6.000	0.2362	-0.008	-0.0003	14.000	0.5512	-0.008	-0.0003	6.000	0.2362	-0.060	-0.0024	13°
08	8.000	0.3150	-0.008	-0.0003	16.000	0.6299	-0.008	-0.0003	8.000	0.3150	-0.060	-0.0024	15°
10	10.000	0.3937	-0.008	-0.0003	19.000	0.7480	-0.009	-0.0004	9.000	0.3543	-0.060	-0.0024	12°
12	12.000	0.4724	-0.008	-0.0003	22.000	0.8661	-0.009	-0.0004	10.000	0.3937	-0.060	-0.0024	11°
15	15.000	0.5906	-0.008	-0.0003	26.000	1.0236	-0.009	-0.0004	12.000	0.4724	-0.060	-0.0024	8°
17	17.000	0.6693	-0.008	-0.0003	30.000	1.1811	-0.011	-0.0004	14.000	0.5512	-0.060	-0.0024	10°
20	20.000	0.7874	-0.010	-0.0004	35.000	1.3780	-0.011	-0.0004	16.000	0.6299	-0.060	-0.0024	9°
25	25.000	0.9843	-0.010	-0.0004	42.000	1.6535	-0.011	-0.0004	20.000	0.7874	-0.060	-0.0024	7°
30	30.000	1.1811	-0.010	-0.0004	47.000	1.8504	-0.011	-0.0004	22.000	0.8661	-0.060	-0.0024	6°
35	35.000	1.3780	-0.012	-0.0005	55.000	2.1654	-0.013	-0.0005	25.000	0.9843	-0.060	-0.0024	6°
40	40.000	1.5748	-0.012	-0.0005	62.000	2.4409	-0.013	-0.0005	28.000	1.1024	-0.060	-0.0024	7°
45	45.000	1.7717	-0.012	-0.0005	68.000	2.6772	-0.013	-0.0005	32.000	1.2598	-0.060	-0.0024	7°
50	50.000	1.9685	-0.012	-0.0005	75.000	2.9528	-0.013	-0.0005	35.000	1.3780	-0.060	-0.0024	6°
60	60.000	2.3622	-0.015	-0.0006	90.000	3.5433	-0.015	-0.0006	44.000	1.7323	-0.060	-0.0024	6°
70	70.000	2.7559	-0.015	-0.0006	105.000	4.1339	-0.015	-0.0006	49.000	1.9291	-0.060	-0.0024	6°
80	80.000	3.1496	-0.015	-0.0006	120.000	4.7244	-0.015	-0.0006	55.000	2.1654	-0.060	-0.0024	6°

Schematic Drawing

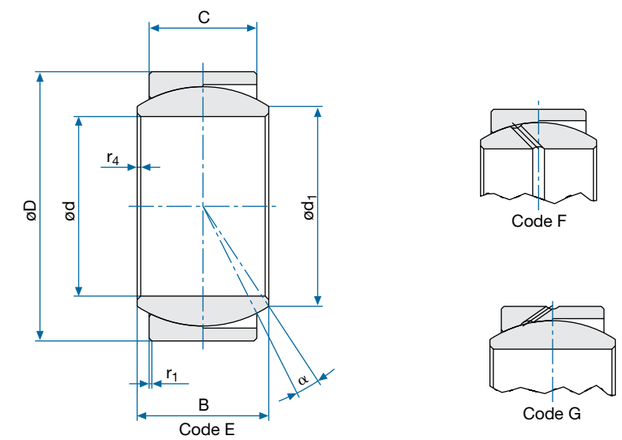

Specifications

EN2336

Diameter Code	C		Δ Cmp		d_1 (min.)		r_1 x 45°	
	mm	Inch	mm	Inch	mm	Inch	mm	Inch
05	4.000	0.1575	-0.250	-0.0098	8.000	0.3150	0.400 to 0.700	0.0157 to 0.0276
06	4.000	0.1575	-0.250	-0.0098	8.000	0.3150	0.400 to 0.700	0.0157 to 0.0276
08	5.000	0.1969	-0.250	-0.0098	10.000	0.3937	0.500 to 0.800	0.0197 to 0.0315
10	6.000	0.2362	-0.250	-0.0098	13.000	0.5118	0.500 to 0.800	0.0197 to 0.0315
12	7.000	0.2756	-0.250	-0.0098	15.000	0.5906	0.600 to 1.000	0.0236 to 0.0394
15	9.000	0.3543	-0.250	-0.0098	18.000	0.7087	0.600 to 1.000	0.0236 to 0.0394
17	10.000	0.3937	-0.250	-0.0098	20.000	0.7874	0.900 to 1.300	0.0354 to 0.0512
20	12.000	0.4724	-0.250	-0.0098	24.000	0.9449	0.900 to 1.300	0.0354 to 0.0512
25	16.000	0.6299	-0.250	-0.0098	29.000	1.1417	0.900 to 1.300	0.0354 to 0.0512
30	18.000	0.7087	-0.250	-0.0098	34.000	1.3386	0.900 to 1.300	0.0354 to 0.0512
35	20.000	0.7874	-0.250	-0.0098	39.000	1.5354	0.900 to 1.300	0.0354 to 0.0512
40	22.000	0.8661	-0.250	-0.0098	45.000	1.7717	1.400 to 1.800	0.0551 to 0.0709
45	25.000	0.9843	-0.250	-0.0098	50.000	1.9685	1.400 to 1.800	0.0551 to 0.0709
50	28.000	1.1024	-0.250	-0.0098	55.000	2.1654	1.400 to 1.800	0.0551 to 0.0709
60	36.000	1.4173	-0.250	-0.0098	66.000	2.5984	1.400 to 1.800	0.0551 to 0.0709
70	40.000	1.5748	-0.250	-0.0098	77.000	3.0315	1.400 to 1.800	0.0551 to 0.0709
80	45.000	1.7717	-0.250	-0.0098	88.000	3.4646	1.400 to 1.800	0.0551 to 0.0709

EN2336 continued on pg 146. ►

Specifications

EN2336

Diameter Code	r_4 x 45°		Radial Play Code N		Radial Play Code P		Axial Play Code N	
	mm	Inch	mm	Inch	mm	Inch	mm	Inch
05	0.300 to 0.600	0.0118 to 0.0236	0.015	0.0006	0.008	0.0031	0.030 to 0.060	0.0012 to 0.0024
06	0.300 to 0.600	0.0118 to 0.0236	0.015	0.0006	0.008	0.0031	0.030 to 0.060	0.0012 to 0.0024
08	0.500 to 0.800	0.0197 to 0.0315	0.015	0.0006	0.008	0.0031	0.030 to 0.060	0.0012 to 0.0024
10	0.500 to 0.800	0.0197 to 0.0315	0.015	0.0006	0.008	0.0031	0.030 to 0.060	0.0012 to 0.0024
12	0.500 to 0.800	0.0197 to 0.0315	0.015	0.0006	0.008	0.0031	0.030 to 0.060	0.0012 to 0.0024
15	0.500 to 0.800	0.0197 to 0.0315	0.015	0.0006	0.008	0.0031	0.030 to 0.060	0.0012 to 0.0024
17	0.700 to 1.000	0.0276 to 0.0433	0.015	0.0006	0.008	0.0031	0.030 to 0.060	0.0012 to 0.0024
20	0.700 to 1.000	0.0276 to 0.0433	0.015	0.0006	0.008	0.0031	0.030 to 0.060	0.0012 to 0.0024
25	0.700 to 1.000	0.0276 to 0.0433	0.015	0.0006	0.008	0.0031	0.030 to 0.060	0.0012 to 0.0024
30	0.700 to 1.000	0.0276 to 0.0433	0.015	0.0006	0.008	0.0031	0.030 to 0.060	0.0012 to 0.0024
35	0.700 to 1.000	0.0276 to 0.0433	0.020	0.0008	0.010	0.0004	0.040 to 0.080	0.0016 to 0.0031
40	1.200 to 1.700	0.0472 to 0.0669	0.020	0.0008	0.010	0.0004	0.040 to 0.080	0.0016 to 0.0031
45	1.200 to 1.700	0.0472 to 0.0669	0.020	0.0008	0.010	0.0004	0.040 to 0.080	0.0016 to 0.0031
50	1.200 to 1.700	0.0472 to 0.0669	0.020	0.0008	0.010	0.0004	0.040 to 0.080	0.0016 to 0.0031
60	1.200 to 1.700	0.0472 to 0.0669	0.025	0.0010	0.015	0.0006	0.050 to 0.100	0.0020 to 0.0039
70	1.200 to 1.700	0.0472 to 0.0669	0.025	0.0010	0.015	0.0006	0.050 to 0.100	0.0020 to 0.0039
80	1.200 to 1.700	0.0472 to 0.0669	0.025	0.0010	0.015	0.0006	0.050 to 0.100	0.0020 to 0.0039

Specifications

EN2336

Diameter Code	Axial Play Code P		Static Radial Limit Load		Static Axial Limit Load		Weight	
	mm	Inch	kN	lbs	kN	lbs	g	lbs
05	0.001 to 0.030	0.0000 to 0.0012	12.0	2697.6	0.68	152.9	4	0.009
06	0.001 to 0.030	0.0000 to 0.0012	16.0	3596.8	0.9	202.3	4	0.009
08	0.001 to 0.030	0.0000 to 0.0012	26.0	5844.8	1.50	337.2	7	0.015
10	0.001 to 0.030	0.0000 to 0.0012	45.0	10116.0	2.30	517.0	11	0.024
12	0.001 to 0.030	0.0000 to 0.0012	60.0	13488.0	3.20	719.4	15	0.033
15	0.001 to 0.030	0.0000 to 0.0012	90.0	20232.0	5.55	1247.6	28	0.062
17	0.001 to 0.030	0.0000 to 0.0012	110.0	24728.0	6.95	1562.4	44	0.097
20	0.001 to 0.030	0.0000 to 0.0012	160.0	35968.0	9.85	2214.3	60	0.132
25	0.001 to 0.030	0.0000 to 0.0012	270.0	60696.0	18.15	4080.1	105	0.231
30	0.001 to 0.030	0.0000 to 0.0012	380.0	85424.0	25.16	5656.0	145	0.319
35	0.001 to 0.040	0.0000 to 0.0016	500.0	112400.0	30.00	6744.0	210	0.462
40	0.001 to 0.040	0.0000 to 0.0016	630.0	141624.0	36.66	8241.2	285	0.627
45	0.001 to 0.040	0.0000 to 0.0016	820.0	184336.0	48.10	10812.9	420	0.924
50	0.001 to 0.040	0.0000 to 0.0016	1000.0	224800.0	60.96	13703.8	515	1.133
60	0.001 to 0.050	0.0000 to 0.0020	1600.0	359680.0	102.76	23100.4	1050	2.310
70	0.001 to 0.050	0.0000 to 0.0020	2000.0	449600.0	127.80	28729.4	1510	3.322
80	0.001 to 0.050	0.0000 to 0.0020	2600.0	584480.0	182.80	41093.4	2250	4.950

Designation

EN2336
Number of Standard

A
Grease Type
A: NATO G 354 / MIL-PRF-23827
B: NATO G 395 / MIL-PRF-81322

P
Radial / Axial Play
N: Normal
P: Reduced

15
Diameter Code

E
Type of Lubrication Grooves and Holes
E, F, G: See Schematic Drawing

Part Number Example
EN2336 A P 15 E

Bearing Materials:

Outer Ring
EN2031 / 1.3505.9 / AISI E52100; HRc 58-62

Inner Ring
EN2031 / HRc 60-63 / 1.3505.9 / AISI E52100; HRc 60-63

Axial Load
In Opposite Direction of Loader Slot

Technical Specification
EN2337 / Outer Ring Raceway Treated with MoS_2 Dry Film Lubrication

Diameter Code 05 to 12
Without Lubrication Grooves and Holes

Radial Load
At 90° to Loader Slot

** Inch dimensions are for reference only. | * Permanently marked in non-functional area.*

Contact

USA: KAMATICS CORPORATION 1330 Blue Hills Avenue Bloomfield, CT 06002 USA | **Tel:** +1 860 243 9704 | **E-mail:** KSB@kaman.com
GERMANY: RWG GERMANY GmbH Medbacher Weg 1 D-91315 Höchstadt a. d. Aisch | **Tel:** +49 (91 93) 50105 100 | **E-mail:** RWG@kaman.com

Spherical Bearings

EN2588

- Greased
- Loader Slot Type
- CRES

Specifications

Diameter Code	d		Δ dmp		D		Δ Dmp		B		Δ Bmp		α
	mm	Inch	mm	Inch	mm	Inch	mm	Inch	mm	Inch	mm	Inch	
05	5.000	0.1969	-0.008	-0.0003	14.000	0.5512	-0.008	-0.0003	6.000	0.2362	-0.060	-0.0024	13°
06	6.000	0.2362	-0.008	-0.0003	14.000	0.5512	-0.008	-0.0003	6.000	0.2362	-0.060	-0.0024	13°
08	8.000	0.3150	-0.008	-0.0003	16.000	0.6299	-0.008	-0.0003	8.000	0.3150	-0.060	-0.0024	15°
10	10.000	0.3937	-0.008	-0.0003	19.000	0.7480	-0.009	-0.0004	9.000	0.3543	-0.060	-0.0024	12°
12	12.000	0.4724	-0.008	-0.0003	22.000	0.8661	-0.009	-0.0004	10.000	0.3937	-0.060	-0.0024	11°
15	15.000	0.5906	-0.008	-0.0003	26.000	1.0236	-0.009	-0.0004	12.000	0.4724	-0.060	-0.0024	8°
17	17.000	0.6693	-0.008	-0.0003	30.000	1.1811	-0.011	-0.0004	14.000	0.5512	-0.060	-0.0024	10°
20	20.000	0.7874	-0.010	-0.0004	35.000	1.3780	-0.011	-0.0004	16.000	0.6299	-0.060	-0.0024	9°
25	25.000	0.9843	-0.010	-0.0004	42.000	1.6535	-0.011	-0.0004	20.000	0.7874	-0.060	-0.0024	7°
30	30.000	1.1811	-0.010	-0.0004	47.000	1.8504	-0.011	-0.0004	22.000	0.8661	-0.060	-0.0024	6°
35	35.000	1.3780	-0.012	-0.0005	55.000	2.1654	-0.013	-0.0005	25.000	0.9843	-0.060	-0.0024	6°
40	40.000	1.5748	-0.012	-0.0005	62.000	2.4409	-0.013	-0.0005	28.000	1.1024	-0.060	-0.0024	7°
45	45.000	1.7717	-0.012	-0.0005	68.000	2.6772	-0.013	-0.0005	32.000	1.2598	-0.060	-0.0024	7°
50	50.000	1.9685	-0.012	-0.0005	75.000	2.9528	-0.013	-0.0005	35.000	1.3780	-0.060	-0.0024	6°
60	60.000	2.3622	-0.015	-0.0006	90.000	3.5433	-0.015	-0.0006	44.000	1.7323	-0.060	-0.0024	6°
70	70.000	2.7559	-0.015	-0.0006	105.000	4.1339	-0.015	-0.0006	49.000	1.9291	-0.060	-0.0024	6°
80	80.000	3.1496	-0.015	-0.0006	120.000	4.7244	-0.015	-0.0006	55.000	2.1654	-0.060	-0.0024	6°

Schematic Drawing

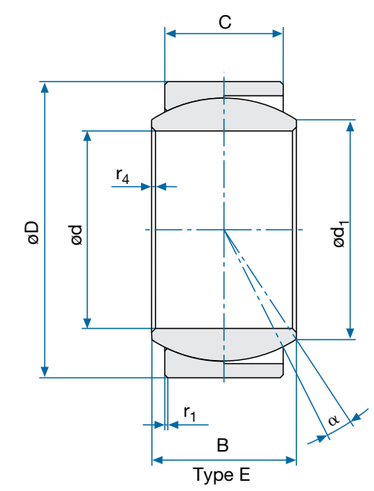

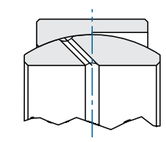

Type F

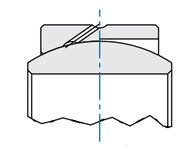

Type G

Specifications

EN2588

Diameter Code	C		d_1 (min.)		r_1 x 45°		Δ $r_1$mp		r_4 x 45°		Δ $r_4$mp		α
	mm	Inch	mm	Inch	mm	Inch	mm	Inch	mm	Inch	mm	Inch	
05	4.000	0.1575	8.000	0.3150	0.400	0.0157	+0.300	0.0118	0.300	0.0118	+0.300	+0.0118	13°
06	4.000	0.1575	8.000	0.3150	0.400	0.0157	+0.300	0.0118	0.300	0.0118	+0.300	+0.0118	13°
08	5.000	0.1969	10.000	0.3937	0.500	0.0197	+0.300	0.0118	0.500	0.0197	+0.300	+0.0118	15°
10	6.000	0.2362	13.000	0.5118	0.500	0.0197	+0.300	0.0118	0.500	0.0197	+0.300	+0.0118	12°
12	7.000	0.2756	15.000	0.5906	0.600	0.0236	+0.400	0.0157	0.500	0.0197	+0.300	+0.0118	11°
15	9.000	0.3543	18.000	0.7087	0.600	0.0236	+0.400	0.0157	0.500	0.0197	+0.300	+0.0118	8°
17	10.000	0.3937	20.000	0.7874	0.900	0.0354	+0.400	0.0157	0.700	0.0276	+0.400	+0.0157	10°
20	12.000	0.4724	24.000	0.9449	0.900	0.0354	+0.400	0.0157	0.700	0.0276	+0.400	+0.0157	9°
25	16.000	0.6299	29.000	1.1417	0.900	0.0354	+0.400	0.0157	0.700	0.0276	+0.400	+0.0157	7°
30	18.000	0.7087	34.000	1.3386	0.900	0.0354	+0.400	0.0157	0.700	0.0276	+0.400	+0.0157	6°
35	20.000	0.7874	39.000	1.5354	0.900	0.0354	+0.400	0.0157	0.700	0.0276	+0.400	+0.0157	6°
40	22.000	0.8661	45.000	1.7717	1.400	0.0551	+0.400	0.0157	1.200	0.0472	+0.500	+0.0197	7°
45	25.000	0.9843	50.000	1.9685	1.400	0.0551	+0.400	0.0157	1.200	0.0472	+0.500	+0.0197	7°
50	28.000	1.1024	55.000	2.1654	1.400	0.0551	+0.400	0.0157	1.200	0.0472	+0.500	+0.0197	6°
60	36.000	1.4173	66.000	2.5984	1.400	0.0551	+0.400	0.0157	1.200	0.0472	+0.500	+0.0197	6°
70	40.000	1.5748	77.000	3.0315	1.400	0.0551	+0.400	0.0157	1.200	0.0472	+0.500	+0.0197	6°
80	45.000	1.7717	88.000	3.4646	1.400	0.0551	+0.400	0.0157	1.200	0.0472	+0.500	+0.0197	6°

EN2588 continued on pg 150. ►

Specifications

EN2588

Diameter Code	Radial Play Code N / (max.)		Radial Play Code P / (max.)		Axial Play Code N	
	mm	Inch	mm	Inch	mm	Inch
05	0.015	0.0006	0.008	0.0003	0.030 to 0.060	0.0012 to 0.0024
06	0.015	0.0006	0.008	0.0003	0.030 to 0.060	0.0012 to 0.0024
08	0.015	0.0006	0.008	0.0003	0.030 to 0.060	0.0012 to 0.0024
10	0.015	0.0006	0.008	0.0003	0.030 to 0.060	0.0012 to 0.0024
12	0.015	0.0006	0.008	0.0003	0.030 to 0.060	0.0012 to 0.0024
15	0.015	0.0006	0.008	0.0003	0.030 to 0.060	0.0012 to 0.0024
17	0.015	0.0006	0.008	0.0003	0.030 to 0.060	0.0012 to 0.0024
20	0.015	0.0006	0.008	0.0003	0.030 to 0.060	0.0012 to 0.0024
25	0.015	0.0006	0.008	0.0003	0.030 to 0.060	0.0012 to 0.0024
30	0.015	0.0006	0.008	0.0003	0.030 to 0.060	0.0012 to 0.0024
35	0.020	0.0008	0.010	0.0004	0.040 to 0.080	0.0016 to 0.0031
40	0.020	0.0008	0.010	0.0004	0.040 to 0.080	0.0016 to 0.0031
45	0.020	0.0008	0.010	0.0004	0.040 to 0.080	0.0016 to 0.0031
50	0.020	0.0008	0.010	0.0004	0.040 to 0.080	0.0016 to 0.0031
60	0.025	0.0010	0.015	0.0006	0.050 to 0.100	0.0020 to 0.0039
70	0.025	0.0010	0.015	0.0006	0.050 to 0.100	0.0020 to 0.0039
80	0.025	0.0010	0.015	0.0006	0.050 to 0.100	0.0020 to 0.0039

Specifications

EN2588

Diameter Code	Axial Play Code P		Static Radial Limit Load		Static Axial Limit Load		Weight	
	mm	Inch	kN	lbs	kN	lbs	g	lbs
05	0.001 to 0.030	0.0000 to 0.0012	12.0	2697.6	0.7	152.9	4	0.009
06	0.001 to 0.030	0.0000 to 0.0012	16.0	3596.8	0.9	202.3	4	0.009
08	0.001 to 0.030	0.0000 to 0.0012	26.0	5844.8	1.5	337.2	7	0.015
10	0.001 to 0.030	0.0000 to 0.0012	45.0	10116.0	2.3	517.0	11	0.024
12	0.001 to 0.030	0.0000 to 0.0012	60.0	13488.0	3.2	719.4	15	0.033
15	0.001 to 0.030	0.0000 to 0.0012	90.0	20232.0	5.6	1247.6	28	0.062
17	0.001 to 0.030	0.0000 to 0.0012	110.0	24728.0	7.0	1562.4	44	0.097
20	0.001 to 0.030	0.0000 to 0.0012	160.0	35968.0	9.9	2214.3	60	0.132
25	0.001 to 0.030	0.0000 to 0.0012	270.0	60696.0	18.2	4080.1	105	0.231
30	0.001 to 0.030	0.0000 to 0.0012	380.0	85424.0	25.2	5656.0	145	0.319
35	0.001 to 0.040	0.0000 to 0.0016	500.0	112400.0	30.0	6744.0	210	0.462
40	0.001 to 0.040	0.0000 to 0.0016	630.0	141624.0	36.7	8241.2	285	0.627
45	0.001 to 0.040	0.0000 to 0.0016	820.0	184336.0	48.1	10812.9	420	0.924
50	0.001 to 0.040	0.0000 to 0.0016	1000.0	224800.0	61.0	13703.8	515	1.133
60	0.001 to 0.050	0.0000 to 0.0020	1600.0	359680.0	102.8	23100.4	1050	2.310
70	0.001 to 0.050	0.0000 to 0.0020	2000.0	449600.0	127.8	28729.4	1510	3.322
80	0.001 to 0.050	0.0000 to 0.0020	2600.0	584480.0	182.8	41093.4	2250	4.950

Designation

EN2588
Number of Standard

A
Grease Type
A: NATO G 354 / MIL-PRF-23827
B: NATO G 395 / MIL-PRF-81322

P
Radial / Axial Play
N: Normal
P: Reduced

15
Diameter Code

E
Type of Lubrication Grooves and Holes
E, F, G: See Schematic Drawing

Part Number Example
EN2588 A P 15 E

Bearing Materials:

Outer Ring
EN2030 / 1.3544.9 / AISI 440C; HRc 58 min.

Inner Ring
EN2030 / 1.3544.9 / AISI 440C; HRc 55-62

Axial Load
In Opposite Direction of Loader Slot

Technical Specification
EN2337 / Outer Ring Raceway Treated with MoS_2 Dry Film Lubrication

Diameter Code 05 to 12
Without Lubrication Grooves and Holes

Radial Load
At 90° to Loader Slot

** Inch dimensions are for reference only. | * Permanently marked in non-functional area.*

Contact

USA: KAMATICS CORPORATION 1330 Blue Hills Avenue Bloomfield, CT 06002 USA | **Tel:** +1 860 243 9704 | **E-mail:** KSB@kaman.com
GERMANY: RWG GERMANY GmbH Medbacher Weg 1 D-91315 Höchstadt a. d. Aisch | **Tel:** +49 (91 93) 50105 100 | **E-mail:** RWG@kaman.com

Spherical Bearings

GE...D

- Loader Slot Type
- Carbon Steel

Specifications

Diameter Code		d		Δ dmp		D		Δ Dmp		B		Δ Bmp	
		mm	Inch	mm	Inch	mm	Inch	mm	Inch	mm	Inch	mm	Inch
4	No Lubrication Grooves Available	4.000	0.1575	-0.008	-0.0003	12.000	0.4724	-0.008	-0.0003	5.000	0.1969	-0.075	-0.0030
5		5.000	0.1969	-0.008	-0.0003	14.000	0.5512	-0.008	-0.0003	6.000	0.2362	-0.075	-0.0030
6		6.000	0.2362	-0.008	-0.0003	14.000	0.5512	-0.008	-0.0003	6.000	0.2362	-0.075	-0.0030
8		8.000	0.3150	-0.008	-0.0003	16.000	0.6299	-0.008	-0.0003	8.000	0.3150	-0.090	-0.0035
10		10.000	0.3937	-0.008	-0.0003	19.000	0.7480	-0.009	-0.0004	9.000	0.3543	-0.090	-0.0035
12		12.000	0.4724	-0.008	-0.0003	22.000	0.8661	-0.009	-0.0004	10.000	0.3937	-0.090	-0.0035
15	15SS	15.000	0.5906	-0.008	-0.0003	26.000	1.0236	-0.009	-0.0004	12.000	0.4724	-0.110	-0.0043
17	17SS	17.000	0.6693	-0.008	-0.0003	30.000	1.1811	-0.009	-0.0004	14.000	0.5512	-0.110	-0.0043
20	20SS	20.000	0.7874	-0.010	-0.0004	35.000	1.3780	-0.011	-0.0004	16.000	0.6299	-0.110	-0.0043
25	25SS	25.000	0.9843	-0.010	-0.0004	42.000	1.6535	-0.011	-0.0004	20.000	0.7874	-0.130	-0.0051
30	30SS	30.000	1.1811	-0.010	-0.0004	47.000	1.8504	-0.011	-0.0004	22.000	0.8661	-0.130	-0.0051
35	35SS	35.000	1.3780	-0.012	-0.0005	55.000	2.1654	-0.013	-0.0005	25.000	0.9843	-0.130	-0.0051
40	40SS	40.000	1.5748	-0.012	-0.0005	62.000	2.4409	-0.013	-0.0005	28.000	1.1024	-0.130	-0.0051
45	45SS	45.000	1.7717	-0.012	-0.0005	68.000	2.6772	-0.013	-0.0005	32.000	1.2598	-0.160	-0.0063
50	50SS	50.000	1.9685	-0.012	-0.0005	75.000	2.9528	-0.013	-0.0005	35.000	1.3780	-0.160	-0.0063
60	60SS	60.000	2.3622	-0.015	-0.0006	90.000	3.5433	-0.015	-0.0006	44.000	1.7323	-0.160	-0.0063
70	70SS	70.000	2.7559	-0.015	-0.0006	105.000	4.1339	-0.015	-0.0006	49.000	1.9291	-0.160	-0.0063
80	80SS	80.000	2.7559	-0.015	-0.0006	120.000	4.1339	-0.015	-0.0006	55.000	2.1654	-0.190	-0.0075

Schematic Drawing

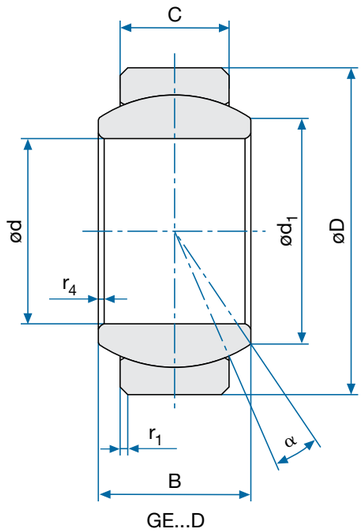

GE...D

Specifications

GE...D

Diameter Code		C		d_1 (min.)		r_1 x 45°		Δ $r_1$mp		α
		-0.240	-0.0094							
		mm	Inch	mm	Inch	mm	Inch	mm	Inch	
4	No Lubrication Grooves Available	3.000	0.1181	6.200	0.2441	0.500	0.0197	-0.200 to +0.300	-0.0079 to +0.0118	16°
5		4.000	0.1575	8.000	0.3150	0.500	0.0197	-0.200 to +0.300	-0.0079 to +0.0118	13°
6		4.000	0.1575	8.000	0.3150	0.500	0.0197	-0.200 to +0.300	-0.0079 to +0.0118	13°
8		5.000	0.1969	10.200	0.4016	0.500	0.0197	-0.200 to +0.300	-0.0079 to +0.0118	15°
10		6.000	0.2362	13.200	0.5197	0.500	0.0197	-0.200 to +0.300	-0.0079 to +0.0118	12°
12		7.000	0.2756	15.000	0.5906	0.800	0.0315	-0.300 to +0.400	-0.0118 to +0.0157	11°
15	15SS	9.000	0.3543	18.500	0.7283	0.800	0.0315	-0.300 to +0.400	-0.0118 to +0.0157	9°
17	17SS	10.000	0.3937	20.700	0.8150	0.800	0.0315	-0.300 to +0.400	-0.0118 to +0.0157	10°
20	20SS	12.000	0.4724	25.400	1.0000	1.000	0.0394	-0.400 to +0.500	-0.0157 to +0.0197	9°
25	25SS	16.000	0.6299	29.900	1.1772	1.000	0.0394	-0.400 to +0.500	-0.0157 to +0.0197	7°
30	30SS	18.000	0.7087	34.500	1.3583	1.000	0.0394	-0.400 to +0.500	-0.0157 to +0.0197	6°
35	35SS	20.000	0.7874	39.800	1.5669	1.200	0.0472	-0.400 to +0.500	-0.0157 to +0.0197	7°
40	40SS	22.000	0.8661	45.000	1.7717	1.200	0.0472	-0.400 to +0.500	-0.0157 to +0.0197	7°
45	45SS	25.000	0.9843	50.900	2.0039	1.200	0.0472	-0.400 to +0.500	-0.0157 to +0.0197	7°
50	50SS	28.000	1.1024	56.000	2.2047	1.200	0.0472	-0.400 to +0.500	-0.0157 to +0.0197	7°
60	60SS	36.000	1.4173	66.800	2.6299	1.500	0.0591	-0.500 to +0.700	-0.0197 to +0.0276	6°
70	70SS	40.000	1.5748	77.900	3.0669	1.500	0.0591	-0.500 to +0.700	-0.0197 to +0.0276	6°
80	80SS	45.000	1.7717	89.500	3.5236	1.500	0.0591	-0.500 to +0.700	-0.0197 to +0.0276	6°

GE...D continued on pg 154. ►

Specifications

GE…D

Diameter Code		r_4 x 45°		Δ $r_4$mp		Radial Play Code 1	
		mm	Inch	mm	Inch	mm	Inch
4	No Lubrication Grooves Available	0.500	0.0197	-0.200 to +0.100	-0.0079 to +0.0039	0.001 to 0.008	0.0000 to 0.0003
5		0.500	0.0197	-0.200 to +0.100	-0.0079 to +0.0039	0.001 to 0.008	0.0000 to 0.0003
6		0.500	0.0197	-0.200 to +0.100	-0.0079 to +0.0039	0.001 to 0.008	0.0000 to 0.0003
8		0.500	0.0197	-0.200 to +0.100	-0.0079 to +0.0039	0.001 to 0.008	0.0000 to 0.0003
10		0.800	0.0315	-0.300	-0.0118	0.001 to 0.008	0.0000 to 0.0003
12		0.800	0.0315	-0.300	-0.0118	0.001 to 0.008	0.0000 to 0.0003
15	15SS	0.800	0.0315	-0.300	-0.0118	0.001 to 0.010	0.0000 to 0.0004
17	17SS	0.800	0.0315	-0.300	-0.0118	0.001 to 0.010	0.0000 to 0.0004
20	20SS	0.800	0.0315	-0.300	-0.0118	0.001 to 0.010	0.0000 to 0.0004
25	25SS	0.800	0.0315	-0.300	-0.0118	0.001 to 0.012	0.0000 to 0.0005
30	30SS	0.800	0.0315	-0.300	-0.0118	0.001 to 0.012	0.0000 to 0.0005
35	35SS	1.000	0.0394	-0.400	-0.0157	0.001 to 0.012	0.0000 to 0.0005
40	40SS	1.000	0.0394	-0.400	-0.0157	0.001 to 0.015	0.0000 to 0.0006
45	45SS	1.000	0.0394	-0.400	-0.0157	0.001 to 0.015	0.0000 to 0.0006
50	50SS	1.000	0.0394	-0.400	-0.0157	0.001 to 0.015	0.0000 to 0.0006
60	60SS	1.200	0.0472	-0.400	-0.0157	0.001 to 0.015	0.0000 to 0.0006
70	70SS	1.200	0.0472	-0.400	-0.0157	0.001 to 0.018	0.0000 to 0.0007
80	80SS	1.200	0.0472	-0.400	-0.0157	0.001 to 0.018	0.0000 to 0.0007

Specifications

GE…D

Diameter Code		Radial Play Code 2		Static Radial Limit Load	
		mm	Inch	kN	lbs
4	No Lubrication Grooves Available	0.008 to 0.016	0.0003 to 0.0006	12.0	2697.6
5		0.008 to 0.016	0.0003 to 0.0006	20.0	4496.0
6		0.008 to 0.016	0.0003 to 0.0006	20.0	4496.0
8		0.008 to 0.016	0.0003 to 0.0006	32.0	7193.6
10		0.008 to 0.016	0.0003 to 0.0006	48.0	10790.4
12		0.008 to 0.016	0.0003 to 0.0006	63.0	14162.4
15	15SS	0.010 to 0.020	0.0004 to 0.0008	99.0	22255.2
17	17SS	0.010 to 0.020	0.0004 to 0.0008	125.0	28100.0
20	20SS	0.010 to 0.020	0.0004 to 0.0008	174.0	39115.2
25	25SS	0.012 to 0.025	0.0005 to 0.0010	284.0	63843.2
30	30SS	0.012 to 0.025	0.0005 to 0.0010	366.0	82276.8
35	35SS	0.012 to 0.025	0.0005 to 0.0010	470.0	105656.0
40	40SS	0.015 to 0.030	0.0006 to 0.0012	583.0	131058.4
45	45SS	0.015 to 0.030	0.0006 to 0.0012	750.0	168600.0
50	50SS	0.015 to 0.030	0.0006 to 0.0012	924.0	207715.2
60	60SS	0.015 to 0.030	0.0006 to 0.0012	1440.0	323712.0
70	70SS	0.018 to 0.036	0.0007 to 0.0014	1840.0	413632.0
80	80SS	0.018 to 0.036	0.0007 to 0.0014	2362.0	530977.6

Designation

GE D
Number of Series

17
Diameter Code

SS
Lubrication Grooves and Holes
SS: With Lubrication Grooves and Holes (See Schematic Drawing)
No Code: None

.1
Radial Play
.1: Reduced
.2: Normal

T
Code for Dry Lubrication
None: Phosphated per LN 29745
T: Outer Ring Raceway Treated With MoS_2 Dry Film Lubrication

Part Number Example
GE 17 D SS .1 T

Bearing Materials:

Outer Ring
EN2031 / 1.3505.9 / AISI E52100; HRc 55 - 62

Inner Ring
EN2031 / 1.3505.9 / AISI E52100; HRc 61 min.

Technical Specification
DIN 65237 / LN 9193
Under Radial Load the Loader Slot Shall Remain at 90° to the Load Direction

** Inch dimensions are for reference only. | * Permanently marked in non-functional area.*

Contact

USA: KAMATICS CORPORATION 1330 Blue Hills Avenue Bloomfield, CT 06002 USA | **Tel:** +1 860 243 9704 | **E-mail:** KSB@kaman.com
GERMANY: RWG GERMANY GmbH Medbacher Weg 1 D-91315 Höchstadt a. d. Aisch | **Tel:** +49 (91 93) 50105 100 | **E-mail:** RWG@kaman.com

Spherical Bearings

GE...DN

- Loader Slot Type
- CRES

Specifications

Diameter Code		d		Δ dmp		D		Δ Dmp		B		Δ Bmp	
		mm	Inch	mm	Inch	mm	Inch	mm	Inch	mm	Inch	mm	Inch
4	No Lubrication Grooves Available	4.000	0.1575	-0.008	-0.0003	12.000	0.4724	-0.008	-0.0003	5.000	0.1969	-0.120	-0.0047
5		5.000	0.1969	-0.008	-0.0003	14.000	0.5512	-0.008	-0.0003	6.000	0.2362	-0.120	-0.0047
6		6.000	0.2362	-0.008	-0.0003	14.000	0.5512	-0.008	-0.0003	6.000	0.2362	-0.120	-0.0047
8		8.000	0.3150	-0.008	-0.0003	16.000	0.6299	-0.008	-0.0003	8.000	0.3150	-0.120	-0.0047
10		10.000	0.3937	-0.008	-0.0003	19.000	0.7480	-0.009	-0.0004	9.000	0.3543	-0.120	-0.0047
12		12.000	0.4724	-0.008	-0.0003	22.000	0.8661	-0.009	-0.0004	10.000	0.3937	-0.120	-0.0047
15	15SS	15.000	0.5906	-0.008	-0.0003	26.000	1.0236	-0.009	-0.0004	12.000	0.4724	-0.120	-0.0047
17	17SS	17.000	0.6693	-0.008	-0.0003	30.000	1.1811	-0.009	-0.0004	14.000	0.5512	-0.120	-0.0047
20	20SS	20.000	0.7874	-0.010	-0.0004	35.000	1.3780	-0.011	-0.0004	16.000	0.6299	-0.120	-0.0047
25	25SS	25.000	0.9843	-0.010	-0.0004	42.000	1.6535	-0.011	-0.0004	20.000	0.7874	-0.120	-0.0047
30	30SS	30.000	1.1811	-0.010	-0.0004	47.000	1.8504	-0.011	-0.0004	22.000	0.8661	-0.120	-0.0047
35	35SS	35.000	1.3780	-0.012	-0.0005	55.000	2.1654	-0.013	-0.0005	25.000	0.9843	-0.120	-0.0047
40	40SS	40.000	1.5748	-0.012	-0.0005	62.000	2.4409	-0.013	-0.0005	28.000	1.1024	-0.120	-0.0047
45	45SS	45.000	1.7717	-0.012	-0.0005	68.000	2.6772	-0.013	-0.0005	32.000	1.2598	-0.120	-0.0047
50	50SS	50.000	1.9685	-0.012	-0.0005	75.000	2.9528	-0.013	-0.0005	35.000	1.3780	-0.120	-0.0047
60	60SS	60.000	2.3622	-0.015	-0.0006	90.000	3.5433	-0.015	-0.0006	44.000	1.7323	-0.150	-0.0059
70	70SS	70.000	2.7559	-0.015	-0.0006	105.000	4.1339	-0.015	-0.0006	49.000	1.9291	-0.150	-0.0059
80	80SS	80.000	2.7559	-0.015	-0.0006	120.000	4.1339	-0.015	-0.0006	55.000	2.1654	-0.150	-0.0059

Schematic Drawing

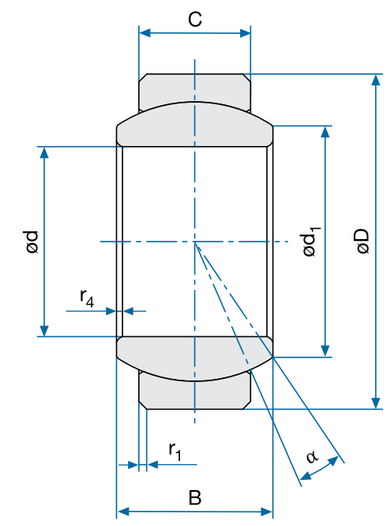

GE...DN

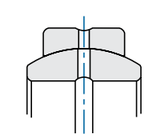

GE...DNSS

Specifications

GE...DN

Diameter Code		C		d_1 (min.)		r_1 x 45°		Δ $r_1$mp		α
		-0.240	-0.0094							
		mm	Inch	mm	Inch	mm	Inch	mm	Inch	
4	No Lubrication Grooves Available	3.000	0.1181	6.200	0.2441	0.500	0.0197	-0.200 to +0.300	-0.0079 to +0.0118	16°
5		4.000	0.1575	8.000	0.3150	0.500	0.0197	-0.200 to +0.300	-0.0079 to +0.0118	13°
6		4.000	0.1575	8.000	0.3150	0.500	0.0197	-0.200 to +0.300	-0.0079 to +0.0118	13°
8		5.000	0.1969	10.200	0.4016	0.500	0.0197	-0.200 to +0.300	-0.0079 to +0.0118	15°
10		6.000	0.2362	13.200	0.5197	0.500	0.0197	-0.200 to +0.300	-0.0079 to +0.0118	12°
12		7.000	0.2756	15.000	0.5906	0.800	0.0315	-0.300 to +0.400	-0.0118 to +0.0157	11°
15	15SS	9.000	0.3543	18.500	0.7283	0.800	0.0315	-0.300 to +0.400	-0.0118 to +0.0157	9°
17	17SS	10.000	0.3937	20.700	0.8150	0.800	0.0315	-0.300 to +0.400	-0.0118 to +0.0157	10°
20	20SS	12.000	0.4724	25.400	1.0000	1.000	0.0394	-0.400 to +0.500	-0.0157 to +0.0197	9°
25	25SS	16.000	0.6299	29.900	1.1772	1.000	0.0394	-0.400 to +0.500	-0.0157 to +0.0197	7°
30	30SS	18.000	0.7087	34.500	1.3583	1.000	0.0394	-0.400 to +0.500	-0.0157 to +0.0197	6°
35	35SS	20.000	0.7874	39.800	1.5669	1.200	0.0472	-0.400 to +0.500	-0.0157 to +0.0197	7°
40	40SS	22.000	0.8661	45.000	1.7717	1.200	0.0472	-0.400 to +0.500	-0.0157 to +0.0197	7°
45	45SS	25.000	0.9843	50.900	2.0039	1.200	0.0472	-0.400 to +0.500	-0.0157 to +0.0197	7°
50	50SS	28.000	1.1024	56.000	2.2047	1.200	0.0472	-0.400 to +0.500	-0.0157 to +0.0197	7°
60	60SS	36.000	1.4173	66.800	2.6299	1.500	0.0591	-0.500 to +0.700	-0.0197 to +0.0276	6°
70	70SS	40.000	1.5748	77.900	3.0669	1.500	0.0591	-0.500 to +0.700	-0.0197 to +0.0276	6°
80	80SS	45.000	1.7717	89.500	3.5236	1.500	0.0591	-0.500 to +0.700	-0.0197 to +0.0276	6°

GE...DN continued on pg 158. ►

Specifications

GE...DN

Diameter Code		r_4 x 45°		Tol		Radial Play Code 1	
		mm	Inch	mm	Inch	mm	Inch
4	No Lubrication Grooves Available	0.500	0.0197	-0.200 to +0.100	-0.0079 to +0.0039	0.001 to 0.008	0.0000 to 0.0003
5		0.500	0.0197	-0.200 to +0.100	-0.0079 to +0.0039	0.001 to 0.008	0.0000 to 0.0003
6		0.500	0.0197	-0.200 to +0.100	-0.0079 to +0.0039	0.001 to 0.008	0.0000 to 0.0003
8		0.500	0.0197	-0.200 to +0.100	-0.0079 to +0.0039	0.001 to 0.008	0.0000 to 0.0003
10		0.800	0.0315	-0.300	-0.0118	0.001 to 0.008	0.0000 to 0.0003
12		0.800	0.0315	-0.300	-0.0118	0.001 to 0.008	0.0000 to 0.0003
15	15SS	0.800	0.0315	-0.300	-0.0118	0.001 to 0.010	0.0000 to 0.0004
17	17SS	0.800	0.0315	-0.300	-0.0118	0.001 to 0.010	0.0000 to 0.0004
20	20SS	0.800	0.0315	-0.300	-0.0118	0.001 to 0.010	0.0000 to 0.0004
25	25SS	0.800	0.0315	-0.300	-0.0118	0.001 to 0.012	0.0000 to 0.0005
30	30SS	0.800	0.0315	-0.300	-0.0118	0.001 to 0.012	0.0000 to 0.0005
35	35SS	1.000	0.0394	-0.400	-0.0157	0.001 to 0.012	0.0000 to 0.0005
40	40SS	1.000	0.0394	-0.400	-0.0157	0.001 to 0.015	0.0000 to 0.0006
45	45SS	1.000	0.0394	-0.400	-0.0157	0.001 to 0.015	0.0000 to 0.0006
50	50SS	1.000	0.0394	-0.400	-0.0157	0.001 to 0.015	0.0000 to 0.0006
60	60SS	1.200	0.0472	-0.400	-0.0157	0.001 to 0.015	0.0000 to 0.0006
70	70SS	1.200	0.0472	-0.400	-0.0157	0.001 to 0.018	0.0000 to 0.0007
80	80SS	1.200	0.0472	-0.400	-0.0157	0.001 to 0.018	0.0000 to 0.0007

Specifications

GE...DN

Diameter Code		Radial Play Code 2		Static Radial Limit Load	
		mm	Inch	kN	lbs
4	No Lubrication Grooves Available	0.008 to 0.016	0.0003 to 0.0006	12.0	2697.6
5		0.008 to 0.016	0.0003 to 0.0006	20.0	4496.0
6		0.008 to 0.016	0.0003 to 0.0006	20.0	4496.0
8		0.008 to 0.016	0.0003 to 0.0006	32.0	7193.6
10		0.008 to 0.016	0.0003 to 0.0006	48.0	10790.4
12		0.008 to 0.016	0.0003 to 0.0006	63.0	14162.4
15	15SS	0.010 to 0.020	0.0004 to 0.0008	99.0	22255.2
17	17SS	0.010 to 0.020	0.0004 to 0.0008	125.0	28100.0
20	20SS	0.010 to 0.020	0.0004 to 0.0008	174.0	39115.2
25	25SS	0.012 to 0.025	0.0005 to 0.0010	284.0	63843.2
30	30SS	0.012 to 0.025	0.0005 to 0.0010	366.0	82276.8
35	35SS	0.012 to 0.025	0.0005 to 0.0010	470.0	105656.0
40	40SS	0.015 to 0.030	0.0006 to 0.0012	583.0	131058.4
45	45SS	0.015 to 0.030	0.0006 to 0.0012	750.0	168600.0
50	50SS	0.015 to 0.030	0.0006 to 0.0012	924.0	207715.2
60	60SS	0.015 to 0.030	0.0006 to 0.0012	1440.0	323712.0
70	70SS	0.018 to 0.036	0.0007 to 0.0014	1840.0	413632.0
80	80SS	0.018 to 0.036	0.0007 to 0.0014	2362.0	530977.6

Designation

GE DN
Number of Series

17
Diameter Code

SS
Lubrication Grooves and Holes
SS: With Lubrication Grooves and Holes (See Schematic Drawing)
No Code: None

.1
Radial Play
.1: Reduced
.2: Normal

T
Code for Dry Lubrication
None: Bearing Treated With MoS_2 Paste
T: Outer Ring Raceway Treated With MoS_2 Dry Film Lubrication

Part Number Example
GE 17 DN SS .1 T

Bearing Materials:

Outer Ring
EN2030 / 1.3544.9 / AISI 440C; HRc 58 min.

Inner Ring
EN2030 / 1.3544.9 / AISI 440C; HRc 55 - 62

Technical Specification
DIN 65237 / LN 9193
Under Radial Load the Loader Slot Shall Remain at 90° to the Load Direction

** Inch dimensions are for reference only. | * Permanently marked in non-functional area.*

Contact

USA: KAMATICS CORPORATION 1330 Blue Hills Avenue Bloomfield, CT 06002 USA | **Tel:** +1 860 243 9704 | **E-mail:** KSB@kaman.com
GERMANY: RWG GERMANY GmbH Medbacher Weg 1 D-91315 Höchstadt a. d. Aisch | **Tel:** +49 (91 93) 50105 100 | **E-mail:** RWG@kaman.com

Spherical Bearings

GL / GLD

- Loader Slot Type
- CRES / Carbon Steel

Schematic Drawing

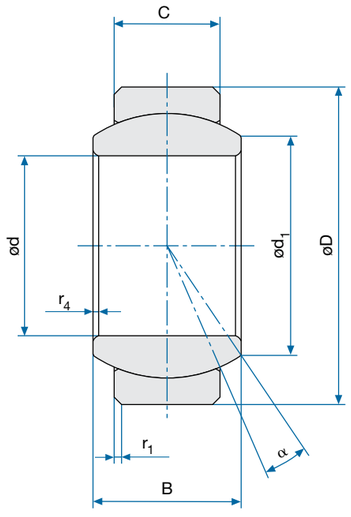

Specifications

Diameter Code	d		Δ dmp		D		Δ Dmp		B		Δ Bmp	
	mm	Inch	mm	Inch	mm	Inch	mm	Inch	mm	Inch	mm	Inch
4	4.000	0.1575	-0.007	-0.0003	12.000	0.4724	-0.007	-0.0003	5.000	0.1969	-0.075	-0.0030
5	5.000	0.1969	-0.007	-0.0003	14.000	0.5512	-0.007	-0.0003	6.000	0.2362	-0.075	-0.0030
6	6.000	0.2362	-0.007	-0.0003	14.000	0.5512	-0.007	-0.0003	6.000	0.2362	-0.075	-0.0030
8/16	8.000	0.3150	-0.007	-0.0003	16.000	0.6299	-0.007	-0.0003	8.000	0.3150	-0.090	-0.0035
8	8.000	0.3150	-0.007	-0.0003	17.000	0.6693	-0.007	-0.0003	8.000	0.3150	-0.090	-0.0035
10/19	10.000	0.3937	-0.007	-0.0003	19.000	0.7480	-0.008	-0.0003	9.000	0.3543	-0.090	-0.0035
10	10.000	0.3937	-0.007	-0.0003	20.000	0.7874	-0.008	-0.0003	9.000	0.3543	-0.090	-0.0035
12	12.000	0.4724	-0.008	-0.0003	22.000	0.8661	-0.008	-0.0003	10.000	0.3937	-0.090	-0.0035
14	14.000	0.5512	-0.008	-0.0003	25.000	0.9843	-0.008	-0.0003	11.000	0.4331	-0.110	-0.0043
15	15.000	0.5906	-0.008	-0.0003	28.000	1.1024	-0.008	-0.0003	12.000	0.4724	-0.110	-0.0043
16	16.000	0.6299	-0.008	-0.0003	28.000	1.1024	-0.008	-0.0003	12.000	0.4724	-0.110	-0.0043
17	17.000	0.6693	-0.008	-0.0003	32.000	1.2598	-0.009	-0.0004	14.000	0.5512	-0.110	-0.0043
18	18.000	0.7087	-0.008	-0.0003	32.000	1.2598	-0.009	-0.0004	14.000	0.5512	-0.110	-0.0043
20	20.000	0.7874	-0.009	-0.0004	35.000	1.3780	-0.009	-0.0004	16.000	0.6299	-0.110	-0.0043
25	25.000	0.9843	-0.009	-0.0004	42.000	1.6535	-0.009	-0.0004	20.000	0.7874	-0.130	-0.0051
30/47	30.000	1.1811	-0.009	-0.0004	47.000	1.8504	-0.009	-0.0004	22.000	0.8661	-0.130	-0.0051
35	35.000	1.3780	-0.011	-0.0004	55.000	2.1654	-0.011	-0.0004	25.000	0.9843	-0.130	-0.0051
40	40.000	1.5748	-0.011	-0.0004	62.000	2.4409	-0.011	-0.0004	28.000	1.1024	-0.130	-0.0051
45/68	45.000	1.7717	-0.011	-0.0004	68.000	2.6772	-0.011	-0.0004	32.000	1.2598	-0.160	-0.0063
50	50.000	1.9685	-0.011	-0.0004	75.000	2.9528	-0.011	-0.0004	35.000	1.3780	-0.160	-0.0063
55	55.000	2.1654	-0.012	-0.0005	85.000	3.3465	-0.013	-0.0005	40.000	1.5748	-0.160	-0.0063
60	60.000	2.3622	-0.012	-0.0005	90.000	3.5433	-0.013	-0.0005	44.000	1.7323	-0.160	-0.0063
70	70.000	2.7559	-0.012	-0.0005	105.000	4.1339	-0.013	-0.0005	49.000	1.9291	-0.160	-0.0063
80	80.000	3.1496	-0.012	-0.0005	120.000	4.7244	-0.013	-0.0005	55.000	2.1654	-0.190	-0.0075

Specifications

GL / GLD

Diameter Code	C		Δ Cmp		d_1 (min.)		r_1 x 45°		Δ r_1		Weight	
	mm	Inch	mm	Inch	mm	Inch	mm	Inch	mm	Inch	g	lbs
4	3.000	0.1181	-0.075	-0.0030	6.200	0.2441	0.400	0.0157	+0.300	+0.0118	3	0.007
5	4.000	0.1575	-0.075	-0.0030	8.000	0.3150	0.400	0.0157	+0.300	+0.0118	4	0.009
6	4.000	0.1575	-0.075	-0.0030	8.000	0.3150	0.400	0.0157	+0.300	+0.0118	4	0.009
8/16	5.000	0.1969	-0.075	-0.0030	10.200	0.4016	0.400	0.0157	+0.300	+0.0118	8	0.018
8	5.000	0.1969	-0.075	-0.0030	10.200	0.4016	0.400	0.0157	+0.300	+0.0118	10	0.022
10/19	6.000	0.2362	-0.075	-0.0030	13.200	0.5197	0.400	0.0157	+0.300	+0.0118	12	0.026
10	6.000	0.2362	-0.075	-0.0030	13.200	0.5197	0.400	0.0157	+0.300	+0.0118	13	0.029
12	7.000	0.2756	-0.090	-0.0035	15.000	0.5906	0.700	0.0276	+0.500	+0.0197	17	0.037
14	8.000	0.3150	-0.090	-0.0035	16.700	0.6575	0.700	0.0276	+0.500	+0.0197	22	0.048
15	9.000	0.3543	-0.090	-0.0035	18.500	0.7283	0.700	0.0276	+0.500	+0.0197	32	0.070
16	9.000	0.3543	-0.090	-0.0035	18.500	0.7283	0.700	0.0276	+0.500	+0.0197	33	0.073
17	10.000	0.3937	-0.090	-0.0035	20.700	0.8150	0.900	0.0354	+0.400	+0.0157	49	0.108
18	10.000	0.3937	-0.090	-0.0035	21.900	0.8622	0.900	0.0354	+0.400	+0.0157	50	0.110
20	12.000	0.4724	-0.110	-0.0043	24.200	0.9528	0.900	0.0354	+0.400	+0.0157	65	0.143
25	16.000	0.6299	-0.110	-0.0043	29.300	1.1535	0.900	0.0354	+0.400	+0.0157	115	0.253
30/47	18.000	0.7087	-0.110	-0.0043	34.200	1.3465	0.900	0.0354	+0.400	+0.0157	160	0.352
35	20.000	0.7874	-0.130	-0.0051	39.800	1.5669	0.900	0.0354	+0.400	+0.0157	229	0.504
40	22.000	0.8661	-0.130	-0.0051	45.000	1.7717	1.200	0.0472	+0.500	+0.0197	315	0.693
45/68	25.000	0.9843	-0.130	-0.0051	50.900	2.0039	1.200	0.0472	+0.500	+0.0197	460	1.012
50	28.000	1.1024	-0.130	-0.0051	56.000	2.2047	1.200	0.0472	+0.500	+0.0197	560	1.232
55	32.000	1.2598	-0.160	-0.0063	62.200	2.4488	1.200	0.0472	+0.500	+0.0197	805	1.771
60	36.000	1.4173	-0.160	-0.0063	66.800	2.6299	1.200	0.0472	+0.500	+0.0197	1100	2.420
70	40.000	1.5748	-0.160	-0.0063	77.900	3.0669	1.200	0.0472	+0.500	+0.0197	1540	3.388
80	45.000	1.7717	-0.160	-0.0063	89.500	3.5236	1.200	0.0472	+0.500	+0.0197	2290	5.038

GL / GLD continued on pg 162. ►

Specifications

GL / GLD

Diameter Code	r_4 x 45°		Δr_4		Axial Play Max. GL	
	mm	Inch	mm	Inch	mm	Inch
4	0.400	0.0157	+0.300	+0.0118	0 to 0.030	0.0000 to 0.0012
5	0.400	0.0157	+0.300	+0.0118	0 to 0.030	0.0000 to 0.0012
6	0.400	0.0157	+0.300	+0.0118	0 to 0.030	0.0000 to 0.0012
8/16	0.400	0.0157	+0.300	+0.0118	0 to 0.030	0.0000 to 0.0012
8	0.400	0.0157	+0.300	+0.0118	0 to 0.030	0.0000 to 0.0012
10/19	0.500	0.0197	+0.300	+0.0118	0 to 0.030	0.0000 to 0.0012
10	0.500	0.0197	+0.300	+0.0118	0 to 0.030	0.0000 to 0.0012
12	0.500	0.0197	+0.300	+0.0118	0 to 0.030	0.0000 to 0.0012
14	0.500	0.0197	+0.300	+0.0118	0 to 0.030	0.0000 to 0.0012
15	0.500	0.0197	+0.300	+0.0118	0 to 0.030	0.0000 to 0.0012
16	0.500	0.0197	+0.300	+0.0118	0 to 0.030	0.0000 to 0.0012
17	0.700	0.0276	+0.400	+0.0157	0 to 0.030	0.0000 to 0.0012
18	0.700	0.0276	+0.400	+0.0157	0 to 0.030	0.0000 to 0.0012
20	0.700	0.0276	+0.400	+0.0157	0 to 0.030	0.0000 to 0.0012
25	0.700	0.0276	+0.400	+0.0157	0 to 0.030	0.0000 to 0.0012
30/47	0.700	0.0276	+0.400	+0.0157	0 to 0.030	0.0000 to 0.0012
35	0.700	0.0276	+0.400	+0.0157	0 to 0.040	0.0000 to 0.0016
40	1.200	0.0472	+0.500	+0.0197	0 to 0.040	0.0000 to 0.0016
45/68	1.200	0.0472	+0.500	+0.0197	0 to 0.040	0.0000 to 0.0016
50	1.200	0.0472	+0.500	+0.0197	0 to 0.040	0.0000 to 0.0016
55	1.200	0.0472	+0.500	+0.0197	0 to 0.050	0.0000 to 0.0020
60	1.200	0.0472	+0.500	+0.0197	0 to 0.050	0.0000 to 0.0020
70	1.200	0.0472	+0.500	+0.0197	0 to 0.050	0.0000 to 0.0020
80	1.200	0.0472	+0.500	+0.0197	0 to 0.050	0.0000 to 0.0020

Specifications

GL / GLD

Diameter Code	Axial Play Max. GLD		Static Radial Limit Load		α
GL	mm	Inch	kN	lbs	
4	0.030 to 0.060	0.0012 to 0.0024	12.0	2697.6	16°
5	0.030 to 0.060	0.0012 to 0.0024	20.0	4496.0	13°
6	0.030 to 0.060	0.0012 to 0.0024	20.0	4496.0	13°
8/16	0.030 to 0.060	0.0012 to 0.0024	32.0	7193.6	15°
8	0.030 to 0.060	0.0012 to 0.0024	32.0	7193.6	15°
10/19	0.030 to 0.060	0.0012 to 0.0024	48.0	10790.4	12°
10	0.030 to 0.060	0.0012 to 0.0024	48.0	10790.4	12°
12	0.030 to 0.060	0.0012 to 0.0024	63.0	14162.4	11°
14	0.030 to 0.060	0.0012 to 0.0024	80.0	17984.0	10°
15	0.030 to 0.060	0.0012 to 0.0024	99.0	22255.2	9°
16	0.030 to 0.060	0.0012 to 0.0024	99.0	22255.2	9°
17	0.030 to 0.060	0.0012 to 0.0024	125.0	28100.0	10°
18	0.030 to 0.060	0.0012 to 0.0024	130.0	29224.0	10°
20	0.030 to 0.060	0.0012 to 0.0024	174.0	39115.2	9°
25	0.030 to 0.060	0.0012 to 0.0024	284.0	63843.2	7°
30/47	0.030 to 0.060	0.0012 to 0.0024	366.0	82276.8	6°
35	0.040 to 0.080	0.0016 to 0.0031	470.0	105656.0	7°
40	0.040 to 0.080	0.0016 to 0.0031	583.0	131058.4	7°
45/68	0.040 to 0.080	0.0016 to 0.0031	750.0	168600.0	7°
50	0.040 to 0.080	0.0016 to 0.0031	924.0	207715.2	7°
55	0.050 to 0.100	0.0020 to 0.0039	1184.0	266163.2	7°
60	0.050 to 0.100	0.0020 to 0.0039	1440.0	323712	6°
70	0.050 to 0.100	0.0020 to 0.0039	1840.0	413632	6°
80	0.050 to 0.100	0.0020 to 0.0039	2362.0	530977.6	6°

Designation

GL
GLD (Increased Axial Play)
Number of Series

17
Diameter Code

1.3544.9
Material
None: EN2031 / 1.3505.9 / AISI E52100
1.3544.9: EN2030 / 1.3544.9 / AISI 440C

Part Number Example
GL 17 1.3544.9

Bearing Materials:

Lubrication
NATO G 354 / MIL-PRF-23827

Technical Specification
DIN 65237 / LN 9193
Under Radial Load the Loader Slot Shall Remain at 90° to the Load Direction

** Inch dimensions are for reference only. | * Permanently marked in non-functional area.*

Contact

USA: KAMATICS CORPORATION 1330 Blue Hills Avenue Bloomfield, CT 06002 USA | **Tel:** +1 860 243 9704 | **E-mail:** KSB@kaman.com
GERMANY: RWG GERMANY GmbH Medbacher Weg 1 D-91315 Höchstadt a. d. Aisch | **Tel:** +49 (91 93) 50105 100 | **E-mail:** RWG@kaman.com

Spherical Bearings

KR-CN Series / AS14104

- Narrow, Chamfered Outer Race
- -65º F to +325º F / -54º C to +163º C
- KR3 to KR16 Qualified to SAE AS81820 with KAron B Liner
- KAron BX AS181820 Type A

Specifications

Bearing Numbers	B		D		W		H		O		Ball Dia (Ref)	
	+0.0000 –0.0005	+0.000 –0.013	+0.0000 –0.0050	+0.000 –0.013	+0.0000 -0.0020	+0.000 -0.051	+0.0050 -0.0050	+0.013 -0.013	Shoulder Dia (min.)			
	Inch	mm	Inch	mm	Inch	mm	Inch	mm	Inch	mm	Inch	mm
KR3-CN	0.1900	4.826	0.5625	14.288	0.2810	7.137	0.2180	5.537	0.2930	7.442	0.4060	10.312
KR4-CN	0.2500	6.350	0.6562	16.667	0.3430	8.712	0.2500	6.350	0.3640	9.246	0.5000	12.700
KR5-CN	0.3125	7.938	0.7500	19.050	0.3750	9.525	0.2810	7.137	0.4190	10.643	0.5620	14.275
KR6-CN	0.3750	9.525	0.8125	20.638	0.4060	10.312	0.3120	7.925	0.4750	12.065	0.6250	15.875
KR7-CN	0.4375	11.113	0.9062	23.017	0.4370	11.100	0.3430	8.712	0.5300	13.462	0.6870	17.450
KR8-CN	0.5000	12.700	1.0000	25.400	0.5000	12.700	0.3900	9.906	0.6000	15.240	0.7810	19.837
KR9-CN	0.5625	14.288	1.0937	27.780	0.5620	14.275	0.4370	11.100	0.6700	17.018	0.8750	22.225
KR10-CN	0.6250	15.875	1.1875	30.163	0.6250	15.875	0.5000	12.700	0.7390	18.771	0.9680	24.587
KR12-CN	0.7500	19.050	1.4375	36.513	0.7500	19.050	0.5930	15.062	0.9200	23.368	1.1870	30.150
KR14-CN	0.8750	22.225	1.5625	39.688	0.8750	22.225	0.7030	17.856	0.9800	24.892	1.3120	33.325
KR16-CN	1.0000	25.400	1.7500	44.450	1.0000	25.400	0.7970	20.244	1.1180	28.397	1.5000	38.100
KR20-CN	1.2500	31.750	2.0000	50.800	1.0930	27.762	0.9420	23.927	1.4060	35.712	1.7810	45.237

Bearing Numbers	F Chamfer x 45º		Radial Dynamic Load Rating (See Note 1)		Radial Static Limit Load (See Note 1)		Axial Static Limit Load (See Note 1)		Approx Weight		Q° Approx Misalignment
	Inch	mm	lbs	Kn	lbs	Kn	lbs	Kn	lbs	g	
KR3-CN	0.0150 / 0.0250	0.381 / 0.635	1500	6.7	3975	17.7	150	0.7	0.02	9.1	10°
KR4-CN	0.0150 / 0.0250	0.381 / 0.635	3320	14.8	6040	26.9	430	1.9	0.02	9.1	10°
KR5-CN	0.0150 / 0.0250	0.381 / 0.635	5460	24.3	8750	38.9	700	3.1	0.03	13.6	10°
KR6-CN	0.0200 / 0.0300	0.508 / 0.762	6600	29.4	10540	46.9	1100	4.9	0.04	18.1	9°
KR7-CN	0.0200 / 0.0300	0.508 / 0.762	8050	35.8	13200	58.7	1400	6.2	0.05	22.7	8°
KR8-CN	0.0200 / 0.0300	0.508 / 0.762	10400	46.3	17900	79.6	2100	9.3	0.07	31.8	8°
KR9-CN	0.0200 / 0.0300	0.508 / 0.762	13000	57.8	23200	103.2	3680	16.4	0.09	40.8	8°
KR10-CN	0.0200 / 0.0300	0.508 / 0.762	16450	73.2	30500	135.7	4720	21.0	0.12	54.4	8°
KR12-CN	0.0300 / 0.0400	0.762 / 1.016	23600	105.0	46400	206.4	6750	30.0	0.21	95.3	8°
KR14-CN	0.0300 / 0.0400	0.762 / 1.016	30250	134.6	62200	276.7	9350	41.6	0.27	122.5	8°
KR16-CN	0.0300 / 0.0400	0.762 / 1.016	38000	169.0	82200	365.7	12160	54.1	0.39	176.9	9°
KR20-CN	0.0300 / 0.0400	0.762 / 1.016	52100	231.8	108000	480.4	15500	69.0	0.53	240.4	6°

Note 1
Load Ratings Shown are with KAron B and BX Liner Systems

Schematic Drawing

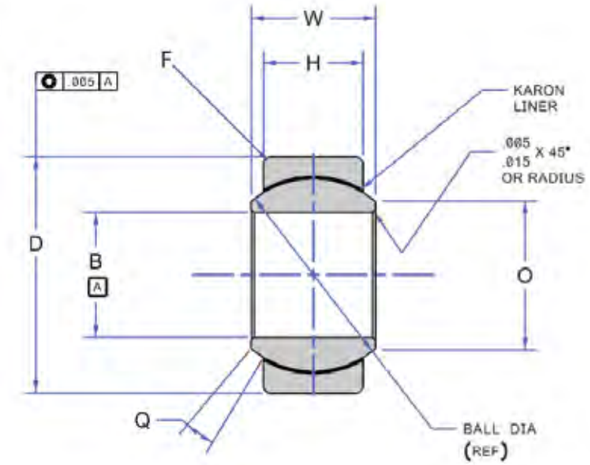

Specifications

KR-CN Series / AS14104

Bearing Size	Nominal Bore		T .010 OD Oversize		U .020 OD Oversize	
			+0.0000 –0.0005	+0.000 –0.013	+0.0000 –0.0005	+0.000 –0.013
	Inch	mm	Inch	mm	Inch	mm
-3	0.1900	4.826	0.5725	14.542	0.5825	14.796
-4	0.2500	6.350	0.6662	16.921	0.6762	17.175
-5	0.3125	7.938	0.7600	19.304	0.7700	19.558
-6	0.3750	9.525	0.8225	20.892	0.8325	21.146
-7	0.4375	11.113	0.9162	23.271	0.9262	23.525
-8	0.5000	12.700	1.0100	25.654	1.0200	25.908
-9	0.5625	14.288	1.1037	28.034	1.1137	28.288
-10	0.6250	15.875	1.1975	30.417	1.2075	30.671
-12	0.7500	19.050	1.4475	36.767	1.4575	37.021
-14	0.8750	22.225	1.5725	39.942	1.5825	40.196
-16	1.0000	25.400	1.7600	44.704	1.7700	44.958
-20	1.2500	31.750	2.0100	51.054	2.0200	51.308

Bearing Size	No-Load Rotational Breakaway Torque			
	Standard		(K) Type	
	In.-lbs	Nm	In.-lbs	Nm
3 & 4	0.25 to 5.0	0.03 to 0.56	0 to 0.5	0 to 0.090
5 – 12	0.25 to 8.0	0.03 to 0.90	0 to 1.0	0 to 0.112
14 – 20	0.25 to 12.0	0.03 to 1.35	0 to 2.0	0 to 0.225

Bearing Size	Bearing Clearances (K) Type Only			
	Radial (max.)		Axial (max.)	
	Inch	mm	Inch	mm
3 & 4	0.0007	0.018	0.0028	0.071
5 – 12	0.0007	0.018	0.0028	0.071
14 – 20	0.0010	0.025	0.0040	0.102

Designation

KR-CN Series / AS14104

AS14104
Number of Standard

KR
KAron Spherical Bearing Prefix

6
Diameter Code
0.3750 ID (ID in 1/16 increments)

CN
Narrow Chamfered Outer Race

B
KAron B liner
(See Table 2 for liner options)

P
Cadmium Plated OD per AMS-QQ-P-416 Option

W
Chrome Plated Ball OD Option

K
Low Breakaway Torque Option

T
.010 Oversize OD Option

Y
PH13-8Mo Ball option (440C no letter)

See KR-CN/4 Series for Lined Bore

Part Number Example
KR 6 - CN B P W K T Y

Bearing Materials:

Liner
See Table 2 for liner options

Outer Race
17-4PH (AMS5643) H1150 Cond.

Ball
440C (AMS5630) HRC 55/62 or PH13-8Mo (AMS5629) H1000 Cond. Passivate PH13-8Mo per AMS2700, Chrome option per AMS2460 Class 2 (0.0002-0.0005 inch thick).

** Millimeter dimensions are for reference only. | * Permanently marked in non-functional area.*

Contact

USA: KAMATICS CORPORATION 1330 Blue Hills Avenue Bloomfield, CT 06002 USA | **Tel:** +1 860 243 9704 | **E-mail:** KSB@kaman.com
GERMANY: RWG GERMANY GmbH Medbacher Weg 1 D-91315 Höchstadt a. d. Aisch | **Tel:** +49 (91 93) 50105 100 | **E-mail:** RWG@kaman.com

Spherical Bearings

KR-CNG Series / AS14101

- Narrow, Grooved Outer Race
- -65º F to +325º F / -54º C to +163º C
- KR3 to KR16 Qualified to SAE AS81820 with KAron B Liner
- KAron BX AS81820 Type A

Specifications

Bearing Size	Nominal Bore		T .010 OD Oversize		U .020 OD Oversize	
			+0.0000 –0.0005	+0.000 –0.013	+0.0000 –0.0005	+0.000 –0.013
	Inch	mm	Inch	mm	Inch	mm
-3	0.1900	4.826	0.5725	14.542	0.5825	14.796
-4	0.2500	6.350	0.6662	16.921	0.6762	17.175
-5,5A	0.3125	7.938	0.7600	19.304	0.7700	19.558
-6	0.3750	9.525	0.8225	20.892	0.8325	21.146
-7	0.4375	11.113	0.9162	23.271	0.9262	23.525
-8	0.5000	12.700	1.0100	25.654	1.0200	25.908
-9	0.5625	14.288	1.1037	28.034	1.1137	28.288
-10	0.6250	15.875	1.1975	30.417	1.2075	30.671
-12	0.7500	19.050	1.4475	36.767	1.4575	37.021
-14	0.8750	22.225	1.5725	39.942	1.5825	40.196
-16	1.0000	25.400	1.7600	44.704	1.7700	44.958
-20	1.2500	31.750	2.0100	51.054	2.0200	51.308

Bearing Size	No-Load Rotational Breakaway Torque			
	Standard		(K) Type	
	In.-lbs	Nm	In.-lbs	Nm
3 & 4	0.25 to 5.0	0.03 to 0.56	0 to 0.5	0 to 0.090
5 – 12	0.25 to 8.0	0.03 to 0.90	0 to 1.0	0 to 0.112
14 – 20	0.25 to 12	0.03 to 1.35	0 to 2.0	0 to 0.225

Bearing Size	Bearing Clearances (K) Type Only			
	Radial (max.)		Axial (max.)	
	Inch	mm	Inch	mm
3 & 4	0.0007	0.018	0.0028	0.071
5 – 12	0.0007	0.018	0.0028	0.071
14 – 20	0.0010	0.025	0.0040	0.102

Bearing Numbers	B		D		W		H		O		Ball Dia (Ref)	
	+0.0000 –0.0005	+0.000 –0.013	+0.0000 –0.0005	+0.000 –0.013	+0.0000 -0.0020	+0.000 -0.051	+0.0050 -0.0050	+0.013 -0.013	Shoulder Dia (min.)			
	Inch	mm	Inch	mm	Inch	mm	Inch	mm	Inch	mm	Inch	mm
KR3-CNG	0.1900	4.826	0.5625	14.288	0.2810	7.137	0.2180	5.537	0.2930	7.442	0.4060	10.312
KR4-CNG	0.2500	6.350	0.6562	16.667	0.3430	8.712	0.2500	6.350	0.3640	9.246	0.5000	12.700
KR5-CNG	0.3125	7.938	0.7500	19.050	0.3750	9.525	0.2810	7.137	0.4190	10.643	0.5620	14.275
KR5A-CNG	0.3125	7.938	0.7500	19.050	0.3750	9.525	0.2810	7.137	0.4190	10.643	0.5620	14.275
KR6-CNG	0.3750	9.525	0.8125	20.638	0.4060	10.312	0.3120	7.925	0.4750	12.065	0.6250	15.875
KR7-CNG	0.4375	11.113	0.9062	23.017	0.4370	11.100	0.3430	8.712	0.5300	13.462	0.6870	17.450
KR8-CNG	0.5000	12.700	1.0000	25.400	0.5000	12.700	0.3900	9.906	0.6000	15.240	0.7810	19.837
KR9-CNG	0.5625	14.288	1.0937	27.780	0.5620	14.275	0.4370	11.100	0.6700	17.018	0.8750	22.225
KR10-CNG	0.6250	15.875	1.1875	30.163	0.6250	15.875	0.5000	12.700	0.7390	18.771	0.9680	24.587
KR12-CNG	0.7500	19.050	1.4375	36.513	0.7500	19.050	0.5930	15.062	0.9200	23.368	1.1870	30.150
KR14-CNG	0.8750	22.225	1.5625	39.688	0.8750	22.225	0.7030	17.856	0.9800	24.892	1.3120	33.325
KR16-CNG	1.0000	25.400	1.7500	44.450	1.0000	25.400	0.7970	20.244	1.1180	28.397	1.5000	38.100
KR20-CNG	1.2500	31.750	2.0000	50.800	1.0930	27.762	0.9420	23.927	1.4060	35.712	1.7810	45.237

Schematic Drawing

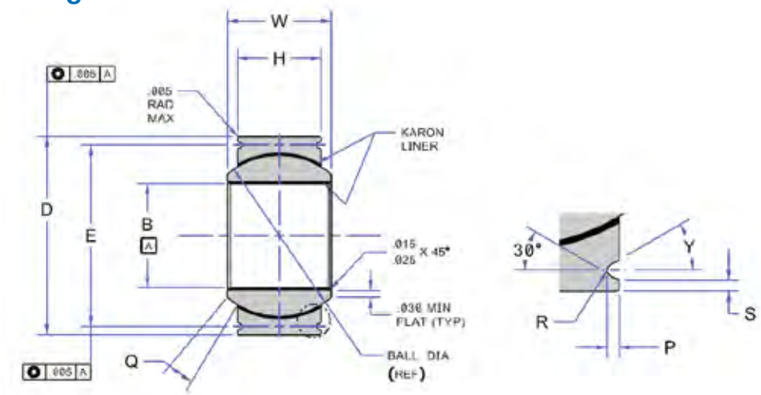

Specifications

KR-CNG Series / AS14101

Bearing Numbers	Groove Dia / E		Radial Dynamic Load Rating (See Note 1)		Radial Static Limit Load (See Note 1)		Axial Static Limit Load (See Note 1)		Approx Weight		Qº Approx Misalignment
	+0.0000 -0.0080	+0.000 -0.203									
	Inch	mm	lbs	Kn	lbs	Kn	lbs	Kn	lbs	g	
KR3-CNG	0.5000	12.700	1500	6.7	3975	17.7	150	0.7	0.02	9.1	10°
KR4-CNG	0.5940	15.088	3320	14.8	6040	26.9	430	1.9	0.02	9.1	10°
KR5-CNG	0.6500	16.510	5460	24.3	8750	38.9	700	3.1	0.03	13.6	10°
KR5A-CNG	0.6600	16.764	5460	24.3	8750	38.9	700	3.1	0.03	13.6	10°
KR6-CNG	0.7120	18.085	6600	29.4	10540	46.9	1100	4.9	0.04	18.1	9°
KR7-CNG	0.8060	20.472	8050	35.8	13200	58.7	1400	6.2	0.05	22.7	8°
KR8-CNG	0.8760	22.250	10400	46.3	17900	79.6	2100	9.3	0.07	31.8	8°
KR9-CNG	0.9700	24.638	13000	57.8	23200	103.2	3680	16.4	0.09	40.8	8°
KR10-CNG	1.0630	27.000	16450	73.2	30500	135.7	4720	21.0	0.12	54.4	8°
KR12-CNG	1.3130	33.350	23600	105.0	46400	206.4	6750	30.0	0.21	95.3	8°
KR14-CNG	1.4380	36.525	30250	134.6	62200	276.7	9350	41.6	0.27	122.5	8°
KR16-CNG	1.6260	41.300	38000	169.0	82200	365.7	12160	54.1	0.39	176.9	9°
KR20-CNG	1.8760	47.650	52100	231.8	108000	480.4	15500	69.0	0.53	240.4	6°

Designation

KR-CNG Series / AS14101

AS14101
Number of Standard

KR
KAron Spherical Bearing Prefix

6
Diameter Code
.3750 ID (ID in 1/16 increments)

CN
Narrow Outer Race

G
Grooved Outer Race

B
KAron B liner
(See Table 2 for liner options)

P
Cadmium Plated OD per AMS-QQ-P-416 Option

E
Zinc-Nickel Plated Option OD per AMS2417

W
Chrome Plated Ball OD Option

K
Low Breakaway Torque Option

T
.010 Oversize OD Option

Y
PH13-8Mo Ball option (440C no letter)

See KR-CNG/1 Series for Lined Bore

Part Number Example
KR 6 - CN G B P W K T Y

Bearing Materials:

Liner
See Table 2 for liner options

Outer Race
17-4PH (AMS5643) H1150 Cond.

Ball
440C (AMS5630) HRC 55/62 or PH13-8Mo (AMS5629) H1000 Cond. Passivate PH13-8Mo per AMS2700, Chrome option per AMS2460 Class 2 (0.0002-0.0005 inch thick).

Note 1
Load Ratings Shown are with KAron B and BX Liner Systems

** Millimeter dimensions are for reference only. | * Permanently marked in non-functional area.*

Contact

USA: KAMATICS CORPORATION 1330 Blue Hills Avenue Bloomfield, CT 06002 USA | **Tel:** +1 860 243 9704 | **E-mail:** KSB@kaman.com
GERMANY: RWG GERMANY GmbH Medbacher Weg 1 D-91315 Höchstadt a. d. Aisch | **Tel:** +49 (91 93) 50105 100 | **E-mail:** RWG@kaman.com

Spherical Bearings

KR-CW Series / AS14102

- Wide, Grooved Outer Race
- -65º F to +325º F / -54º C to +163º C
- KAron B Qualified to SAE AS81820
- KAron BX Qualified to SAE AS81820 Type A

Specifications

Bearing Numbers	B		D		W		H		O		Ball Dia (Ref)	
	+0.0000 −0.0005	+0.000 −0.013	+0.0000 −0.0005	+0.000 −0.013	+0.0000 -0.002	+0.000 -0.051	+0.0050 -0.0050	+0.127 −0.127	Shoulder Dia (min.)			
	Inch	mm	Inch	mm	Inch	mm	Inch	mm	Inch	mm	Inch	mm
KR3-CW	0.1900	4.826	0.6250	15.875	0.4370	11.100	0.3270	8.306	0.3000	7.620	0.5310	13.487
KR4-CW	0.2500	6.350	0.6250	15.875	0.4370	11.100	0.3270	8.306	0.3000	7.620	0.5310	13.487
KR5-CW	0.3125	7.938	0.6875	17.463	0.4370	11.100	0.3170	8.052	0.3600	9.144	0.5620	14.275
KR6-CW	0.3750	9.525	0.8125	20.638	0.5000	12.700	0.4060	10.312	0.4660	11.836	0.6870	17.450
KR7-CW	0.4375	11.113	0.9375	23.813	0.5620	14.275	0.4420	11.227	0.5370	13.640	0.7810	19.837
KR8-CW	0.5000	12.700	1.0000	25.400	0.6250	15.875	0.5050	12.827	0.6070	15.418	0.8750	22.225
KR9-CW	0.5625	14.288	1.1250	28.575	0.6870	17.450	0.5360	13.614	0.7210	18.313	1.0000	25.400
KR10-CW	0.6250	15.875	1.1875	30.163	0.7500	19.050	0.5670	14.402	0.7470	18.974	1.0620	26.975
KR12-CW	0.7500	19.050	1.3750	34.925	0.8750	22.225	0.6300	16.002	0.8450	21.463	1.2180	30.937
KR14-CW	0.8750	22.225	1.6250	41.275	0.8750	22.225	0.7550	19.177	0.9950	25.273	1.3750	34.925
KR16-CW	1.0000	25.400	2.1250	53.975	1.3750	34.925	1.0050	25.527	1.2690	32.233	1.8750	47.625
KR20-CW	1.2500	31.750	2.3750	60.325	1.5000	38.100	1.1300	28.702	1.4600	37.084	2.0930	53.162

Bearing Numbers	F Chamfer x 45º		Radial Dynamic Load Rating (See Note 1)		Radial Static Limit Load (See Note 1)		Axial Static Limit Load (See Note 1)		Approx Weight		Q° Approx Misalignment
	Inch	mm	lbs	Kn	lbs	Kn	lbs	Kn	lbs	g	
KR3-CW	.015 / .025	.381 / .635	4900	21.8	2500	11.1	1770	7.9	0.03	13.6	15º
KR4-CW	.015 / .025	.381 / .635	4900	21.8	5500	24.5	1770	7.9	0.03	13.6	15º
KR5-CW	.015 / .025	.381 / .635	6050	26.9	9400	41.8	1640	7.3	0.04	18.1	14º
KR6-CW	.020 / .030	.508 / .762	8310	37.0	13700	60.9	2630	11.7	0.06	27.2	8º
KR7-CW	.020 / .030	.508 / .762	11750	52.3	20700	92.1	3650	16.2	0.08	36.3	10º
KR8-CW	.020 / .030	.508 / .762	14950	66.5	21400	95.2	4970	22.1	0.10	45.4	9º
KR9-CW	.020 / .030	.508 / .762	18100	80.5	26600	118.3	5370	23.9	0.14	63.5	10º
KR10-CW	.020 / .030	.508 / .762	20250	90.1	29000	129.0	6130	27.3	0.16	72.6	12º
KR12-CW	.030 / .040	.762 / 1.016	26200	116.5	37000	164.6	7730	34.4	0.24	108.9	13º
KR14-CW	.030 / .040	.762 / 1.016	33600	149.5	65200	290.0	10800	48.0	0.35	158.8	6º
KR16-CW	.030 / .040	.762 / 1.016	56250	250.2	104000	462.6	19300	85.9	0.97	440.0	12º
KR20-CW	.030 / .040	.762 / 1.016	65900	293.1	153000	680.6	21400	95.2	1.10	499.0	14º

Note 1

Load Ratings Shown are with KAron B and BX Liner Systems

Schematic Drawing

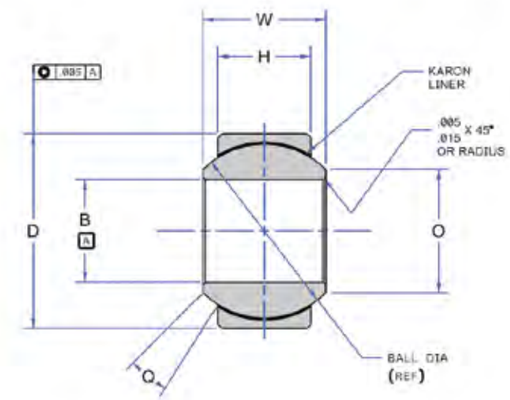

Specifications

KR-CW Series / AS14102 (Ref)

Bearing Size	Nominal Bore		T .010 OD Oversize		U .020 OD Oversize	
			+0.0000 −0.0005	+0.000 −0.013	+0.0000 −0.0005	+0.000 −0.013
	Inch	mm	Inch	mm	Inch	mm
-3	0.1900	4.826	0.6350	16.129	0.6450	16.383
-4	0.2500	6.350	0.6350	16.129	0.6450	16.383
-5	0.3125	7.938	0.6975	17.717	0.7075	17.971
-6	0.3750	9.525	0.8225	20.892	0.8325	21.146
-7	0.4375	11.113	0.9475	24.067	0.9575	24.321
-8	0.5000	12.700	1.0100	25.654	1.0200	25.908
-9	0.5625	14.288	1.1350	28.829	1.1450	29.083
-10	0.6250	15.875	1.1975	30.417	1.2075	30.671
-12	0.7500	19.050	1.3850	35.179	1.3975	35.497
-14	0.8750	22.225	1.6350	41.529	1.6450	41.783
-16	1.0000	25.400	2.1350	54.229	2.1450	54.483
-20	1.2500	31.750	2.3850	60.579	2.3975	60.897

Bearing Size	No-Load Rotational Breakaway Torque			
	Standard		(K) Type	
	In.-lbs	Nm	In.-lbs	Nm
3 & 4	0.25 to 5.0	0.03 to 0.56	0 to 0.5	0 to 0.090
5 – 12	0.25 to 8.0	0.03 to 0.90	0 to 1.0	0 to 0.112
14 – 20	0.25 to 12.0	0.03 to 1.35	0 to 2.0	0 to 0.225

Bearing Size	Bearing Clearances (K) Type Only			
	Radial (max.)		Axial (max.)	
	Inch	mm	Inch	mm
3 & 4	0.0007	0.018	0.0028	0.071
5 – 12	0.0007	0.018	0.0028	0.071
14 – 20	0.0010	0.025	0.0040	0.102

Designation

KR-CW Series / AS14102

AS14102
Number of Standard

KR
KAron Spherical Bearing Prefix

6
Diameter Code
.3750 inch ID (ID in 1/16 inch increments)

CW
Chamfered Wide Outer Race

B
KAron B liner (See Table 2 for liner options)

P
Cadmium Plated OD per AMS-QQ-P-416 Option

E
Zinc-Nickel Plated Option OD per AMS2417

W
Chrome Plated Ball OD Option

K
Low Breakaway Torque Option

T
.010 Oversize OD Option

Y
PH13-8Mo Ball option (440C no letter)
See KR-CW/2 for Lined Bore

Part Number Example
KR 6 CW B P W K T Y

Bearing Materials:

Liner
See Table 2 for liner options

Outer Race
17-4PH (AMS5643) H1150 Cond.

Ball
440C (AMS5630) HRC 55/62 or PH13-8Mo (AMS5629) H1000 Cond. Passivate PH13-8Mo per AMS2700, Chrome option per AMS2460 Class 2 (.0002-.0005 inch thick).

** Millimeter dimensions are for reference only. | * Permanently marked in non-functional area.*

Contact

USA: KAMATICS CORPORATION 1330 Blue Hills Avenue Bloomfield, CT 06002 USA | **Tel:** +1 860 243 9704 | **E-mail:** KSB@kaman.com
GERMANY: RWG GERMANY GmbH Medbacher Weg 1 D-91315 Höchstadt a. d. Aisch | **Tel:** +49 (91 93) 50105 100 | **E-mail:** RWG@kaman.com

Spherical Bearings

KR-CWG Series / AS14103

- Wide, Grooved Outer Race
- -65º F to +325º F / -54º C to +163º C
- KR3 to KR16 Qualified to SAE AS81820 with KAron B Liner
- KAron BX AS181820 Type A

Specifications

Bearing Numbers	B		D		W		H		O		Ball Dia (Ref)	
	+0.0000 −0.0005	+0.000 −0.013	+0.0000 −0.0005	+0.000 −0.013	+0.0000 -0.0020	+0.000 -0.051	+0.0050 -0.0050	+0.127 -0.127	Shoulder Dia (min.)			
	Inch	mm	Inch	mm	Inch	mm	Inch	mm	Inch	mm	Inch	mm
KR3-CWG	0.1900	4.826	0.6250	15.875	0.4370	11.100	0.3270	8.306	0.3000	7.620	0.5310	13.487
KR4-CWG	0.2500	6.350	0.6250	15.875	0.4370	11.100	0.3270	8.306	0.3000	7.620	0.5310	13.487
KR5-CWG	0.3125	7.938	0.6875	17.463	0.4370	11.100	0.3170	8.052	0.3600	9.144	0.5620	14.275
KR6-CWG	0.3750	9.525	0.8125	20.638	0.5000	12.700	0.4060	10.312	0.4660	11.836	0.6870	17.450
KR7-CWG	0.4375	11.113	0.9375	23.813	0.5620	14.275	0.4420	11.227	0.5370	13.640	0.7810	19.837
KR7A-CWG	0.4375	11.113	0.9062	23.017	0.5620	14.275	0.4420	11.227	0.5370	13.640	0.7810	19.837
KR8-CWG	0.5000	12.700	1.0000	25.400	0.6250	15.875	0.5050	12.827	0.6070	15.418	0.8750	22.225
KR9-CWG	0.5625	14.288	1.1250	28.575	0.6870	17.450	0.5360	13.614	0.7210	18.313	1.0000	25.400
KR10-CWG	0.6250	15.875	1.1875	30.163	0.7500	19.050	0.5670	14.402	0.7470	18.974	1.0620	26.975
KR12-CWG	0.7500	19.050	1.3750	34.925	0.8750	22.225	0.6300	16.002	0.8450	21.463	1.2180	30.937
KR14-CWG	0.8750	22.225	1.6250	41.275	0.8750	22.225	0.7550	19.177	0.9950	25.273	1.3750	34.925
KR16-CWG	1.0000	25.400	2.1250	53.975	1.3750	34.925	1.0050	25.527	1.2690	32.233	1.8750	47.625
KR20-CWG	1.2500	31.750	2.3750	60.325	1.5000	38.100	1.1300	28.702	1.4600	37.084	2.0930	53.162

Bearing Numbers	Groove Dia / E		Radial Dynamic Load Rating (See Note 1)		Radial Static Limit Load (See Note 1)		Axial Static Limit Load (See Note 1)		Approx Weight		Qº Approx Misalignment
	+0.0000 -0.0080	+0.000 -0.020									
	Inch	mm	lbs	Kn	lbs	Kn	lbs	Kn	lbs	g	
KR3-CWG	0.5630	14.300	4900	21.8	2500	11.1	1770	7.9	0.03	13.6	15°
KR4-CWG	0.5630	14.300	4900	21.8	5500	24.5	1770	7.9	0.03	13.6	15°
KR5-CWG	0.6220	15.799	6050	26.9	9400	41.8	1640	7.3	0.04	18.1	14°
KR6-CWG	0.7120	18.085	8310	37.0	13700	60.9	2630	11.7	0.06	27.2	8°
KR7-CWG	0.8370	21.260	11750	52.3	20700	92.1	3650	16.2	0.08	36.3	10°
KR7A-CWG	0.8060	20.472	11750	52.3	20700	92.1	3650	16.2	0.08	36.3	10°
KR8-CWG	0.9000	22.860	14950	66.5	21400	95.2	4970	22.1	0.10	45.4	9°
KR9-CWG	1.0250	26.035	18100	80.5	26600	118.3	5370	23.9	0.14	63.5	10°
KR10-CWG	1.0870	27.610	20250	90.1	29000	129.0	6130	27.3	0.16	72.6	12°
KR12-CWG	1.2510	31.775	26200	116.5	37000	164.6	7730	34.4	0.24	108.9	13°
KR14-CWG	1.5010	38.125	33600	149.5	65200	290.0	10800	48.0	0.35	158.8	6°
KR16-CWG	2.0010	50.825	56250	250.2	104000	462.6	19300	85.9	0.97	440.0	12°
KR20-CWG	2.2510	57.175	65900	293.1	153000	680.6	21400	95.2	1.10	499.0	14°

Bearing Materials:

Liner
See Table 2 for liner options

Outer Race
17-4PH (AMS5643) H1150 Cond.

Ball
440C (AMS5630) HRC 55/62 or PH13-8Mo (AMS5629) H1000 Cond. Passivate PH13-8Mo per AMS 2700, Chrome option per AMS 2460 Class 2 (.0002-.0005 thick).

Note 1
Load Ratings Shown are with KAron B and BX Liner Systems

Schematic Drawing

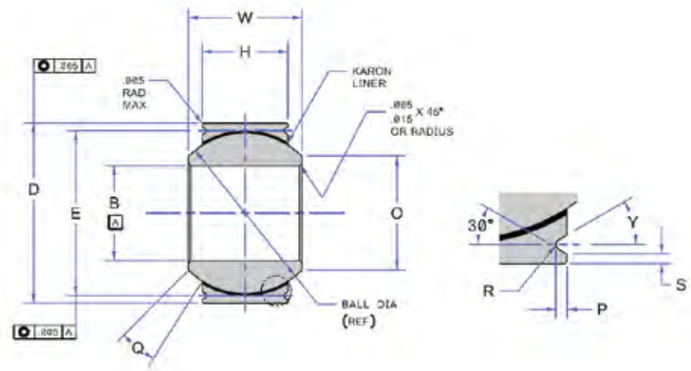

Specifications

KR-CWG Series / AS14103

Bearing Size	Nominal Bore		T .010 OD Oversize		U .020 OD Oversize	
			+0.0000 −0.0005	+0.000 −0.013	+0.0000 −0.0005	+0.000 −0.013
	Inch	mm	Inch	mm	Inch	mm
-3	0.1900	4.826	0.6350	16.129	0.6450	16.383
-4	0.2500	6.350	0.6350	16.129	0.6450	16.383
-5	0.3125	7.938	0.6975	17.717	0.7075	17.971
-6	0.3750	9.525	0.8225	20.892	0.8325	21.146
-7	0.4375	11.113	0.9475	24.067	0.9575	24.321
-7A	0.4375	11.113	0.9162	23.271	0.9262	23.525
-8	0.5000	12.700	1.0100	25.654	1.0200	25.908
-9	0.5625	14.288	1.1350	28.829	1.1450	29.083
-10	0.6250	15.875	1.1975	30.417	1.2075	30.671
-12	0.7500	19.050	1.3850	35.179	1.3975	35.497
-14	0.8750	22.225	1.6350	41.529	1.6450	41.783
-16	1.0000	25.400	2.1350	54.229	2.1450	54.483
-20	1.2500	31.750	2.3850	60.579	2.3975	60.897

Bearing Size	Bearing Clearances (K) Type Only				No-Load Rotational Breakaway Torque			
	Radial (max.)		Axial (max.)		Standard		(K) Type	
	Inch	mm	Inch	mm	In.-lbs	Nm	In.-lbs	Nm
3 & 4	0.0007	0.018	0.0028	0.071	0.25 to 5.0	0.03 to 0.56	0 to 0.5	0 to 0.090
5 – 12	0.0007	0.018	0.0028	0.071	0.25 to 8.0	0.03 to 0.90	0 to 1.0	0 to 0.112
14 – 20	0.0010	0.025	0.0040	0.102	0.25 to 12	0.03 to 1.35	0 to 2.0	0 to 0.225

Bearing Size	P		R		S Ref		Y°
	+0.0000 −0.0010	+0.000 −0.254	+0.000 −0.0070	+0.000 −0.178			
	Inch	mm	Inch	mm	Inch	mm	
3 & 5	0.0250	0.635	0.0120	0.305	0.0100	0.254	20/30
6 – 10	0.0350	0.890	0.0170	0.430	0.0200	0.508	30
10 – 20	0.0550	0.890	0.0170	0.430	0.0200	0.508	30

Designation

KR-CWG Series / AS14103

AS14103
Number of Standard

KR
KAron Spherical Bearing Prefix

6
Diameter Code
.3750 ID (ID in 1/16 increments)

CW
Chamfered Wide Outer Race

G
Grooved Outer Race

B
KAron B liner
(See Table 2 for liner options)

P
Cadmium Plated OD per AMS-QQ-P-416 Option

E
Zinc-Nickel Plated Option OD per AMS2417

W
Chrome Plated Ball OD Option

K
Low Breakaway Torque Option

T
0.010 inch Over-size OD Option

Y
PH13-8Mo Ball option (440C no letter)

See KR-CWG/3 for Lined Bore

Part Number Example
KR 6 - CW G B P W K T Y

** Millimeter dimensions are for reference only. | * Permanently marked in non-functional area.*

Contact

USA: KAMATICS CORPORATION 1330 Blue Hills Avenue Bloomfield, CT 06002 USA | **Tel:** +1 860 243 9704 | **E-mail:** KSB@kaman.com
GERMANY: RWG GERMANY GmbH Medbacher Weg 1 D-91315 Höchstadt a. d. Aisch | **Tel:** +49 (91 93) 50105 100 | **E-mail:** RWG@kaman.com

Spherical Bearings

KR-CN / 4 Series / AS81820/4

- Narrow, Chamfered Outer Race Lined Bore
- -65º F to +325º F / -54º C to +163º C
- KR4 to KR16 Qualified to SAE AS81820 with KAron B Liner

Specifications

Bearing Numbers	B		D		W		H		Ball Dia (Ref)	
	+0.0000 –0.0010	+0.000 –0.025	+0.0000 –0.0005	+0.000 –0.013	+0.0000 -0.0020	+0.000 -0.051	+0.0050 -0.0050	+0.127 -0.127		
	Inch	mm	Inch	mm	Inch	mm	Inch	mm	Inch	mm
KR3-CN/4	0.1910	4.851	0.5625	14.288	0.2810	7.137	0.2180	5.537	0.4060	10.312
KR4-CN/4	0.2510	6.375	0.6562	16.667	0.3430	8.712	0.2500	6.350	0.5000	12.700
KR5-CN/4	0.3135	7.963	0.7500	19.050	0.3750	9.525	0.2810	7.137	0.5620	14.275
KR6-CN/4	0.3760	9.550	0.8125	20.638	0.4060	10.312	0.3120	7.925	0.6250	15.875
KR7-CN/4	0.4385	11.138	0.9062	23.017	0.4370	11.100	0.3430	8.712	0.6870	17.450
KR8-CN/4	0.5010	12.725	1.0000	25.400	0.5000	12.700	0.3900	9.906	0.7810	19.837
KR9-CN/4	0.5635	14.313	1.0937	27.780	0.5620	14.275	0.4370	11.100	0.8750	22.225
KR10-CN/4	0.6260	15.900	1.1875	30.163	0.6250	15.875	0.5000	12.700	0.9680	24.587
KR12-CN/4	0.7510	19.075	1.4375	36.513	0.7500	19.050	0.5930	15.062	1.1870	30.150
KR14-CN/4	0.8760	22.250	1.5625	39.688	0.8750	22.225	0.7030	17.856	1.3120	33.325
KR16-CN/4	1.0010	25.425	1.7500	44.450	1.0000	25.400	0.7970	20.244	1.5000	38.100
KR20-CN/4	1.2510	31.775	2.0000	50.800	1.0930	27.762	0.9420	23.927	1.7810	45.237

Bearing Numbers	F Chamfer x 45º		Radial Dynamic Load Rating (See Note 1)		Radial Static Limit Load (See Note 1)		Axial Static Limit Load (See Note 1)		Approx Weight		Q° Approx Misalignment
	Inch	mm	lbs	Kn	lbs	Kn	lbs	Kn	lbs	g	
KR3-CN/4	0.0100 / 0.0200	0.254 / 0.508	3975	17.6824	150	0.667	0.02	9.1	0.02	9	10°
KR4-CN/4	0.0100 / 0.0200	0.254 / 0.508	5550	24.6886	430	1.913	0.02	9.1	0.02	9	10°
KR5-CN/4	0.0100 / 0.0200	0.254 / 0.508	7700	34.2527	700	3.114	0.03	13.6	0.03	14	10°
KR6-CN/4	0.0200 / 0.0300	0.508 / 0.762	10200	45.3737	1100	4.893	0.04	18.1	0.04	18	9°
KR7-CN/4	0.0200 / 0.0300	0.508 / 0.762	12950	57.6068	1400	6.228	0.05	22.7	0.05	23	8°
KR8-CN/4	0.0200 / 0.0300	0.508 / 0.762	17250	76.7349	2100	9.342	0.07	31.8	0.07	32	8°
KR9-CN/4	0.0200 / 0.0300	0.508 / 0.762	22150	98.5320	3680	16.370	0.09	40.8	0.09	41	8°
KR10-CN/4	0.0200 / 0.0300	0.508 / 0.762	27700	123.2206	4720	20.996	0.12	54.4	0.12	54	8°
KR12-CN/4	0.0300 / 0.0400	0.762 / 1.016	40500	180.1601	6750	30.027	0.21	95.3	0.21	95	8°
KR14-CN/4	0.0300 / 0.0400	0.762 / 1.016	55950	248.8879	9350	41.593	0.27	122.5	0.27	122	8°
KR16-CN/4	0.0300 / 0.0400	0.762 / 1.016	73800	328.2918	12160	54.093	0.39	176.9	0.39	177	9°
KR20-CN/4	0.0300 / 0.0400	0.762 / 1.016	108000	480.4270	15500	68.950	0.53	240.4	0.53	240	6°

Note 1

Load Ratings Shown are with KAron B Liner System

Schematic Drawing

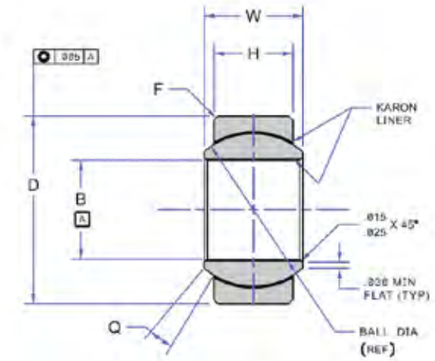

Specifications

KR-CN / 4 Series / AS81820/4

Bearing Size	Nominal Bore		T .010 OD Oversize		U .020 OD Oversize	
			+0.0000 –0.0005	+0.000 –0.013	+0.0000 –0.0005	+0.000 –0.013
	Inch	mm	Inch	mm	Inch	mm
-3	0.1910	4.851	0.5725	14.542	0.5825	14.796
-4	0.2510	6.375	0.6662	16.921	0.6762	17.175
-5	0.3135	7.963	0.7600	19.304	0.7700	19.558
-6	0.3760	9.550	0.8225	20.892	0.8325	21.146
-7	0.4385	11.138	0.9162	23.271	0.9262	23.525
-8	0.5010	12.725	1.0100	25.654	1.0200	25.908
-9	0.5635	14.313	1.1037	28.034	1.1137	28.288
-10	0.6260	15.900	1.1975	30.417	1.2075	30.671
-12	0.7510	19.075	1.4475	36.767	1.4575	37.021
-14	0.8760	22.250	1.5725	39.942	1.5825	40.196
-16	1.0010	25.425	1.7600	44.704	1.7700	44.958
-20	1.2510	31.775	2.0100	51.054	2.0200	51.308

Bearing Size	No-Load Rotational Breakaway Torque			
	Standard		(K) Type	
	In.-lbs	Nm	In.-lbs	Nm
3 & 4	1.0 to 5.0	0.11 to 0.56	0 to 0.5	0 to 0.056
5 – 12	1.0 to 15.0	0.11 to 1.70	0 to 1.0	0 to 0.11
14 – 20	1.0 to 25.0	0.11 to 2.82	0 to 2.0	0 to 0.22

Bearing Size	Bearing Clearances (K) Type Only			
	Radial (Max.)		Axial (Max.)	
	Inch	mm	Inch	mm
3 & 4	0.0007	0.018	0.0028	0.071
5 – 12	0.0007	0.018	0.0028	0.071
14 – 20	0.0010	0.025	0.0040	0.102

Designation

KR-CN/4 Series / AS81820/4

AS81820/4
Number of Standard

KR
KAron Spherical Bearing Prefix

6
Diameter Code
.3750 inch ID (ID in 1/16 inch increments)

CN
Narrow Outer Race

/4
KAron Lined Bore (ID)

B
KAron B liner (See Table 2 for liner options)

P
Cadmium Plated OD per AMS-QQ-P-416 Option

E
Zinc-Nickel Plated Option OD per AMS2417

W
Chrome Plated Ball OD Option

K
Low Breakaway Torque Option

T
0.010 inch Oversize OD Option

Y
PH13-8Mo Ball option (440C no letter)

Part Number Example
KR 6 - CN /4 B P W K T Y

Bearing Materials:

Liner
See Table 2 for liner options

Outer Race
17-4PH (AMS 5643) H1150 Cond.

Ball
440C (AMS5630) HRC 55/62 or PH13-8Mo CRES (AMS5629) Condition H1000, Passivate
PH13-8Mo per AMS-2700 Chrome plate option per AMS 2460, Class 2 (.0002-.0005 thick)

** Millimeter dimensions are for reference only.* | ** Permanently marked in non-functional area.*

Contact

USA: KAMATICS CORPORATION 1330 Blue Hills Avenue Bloomfield, CT 06002 USA | **Tel:** +1 860 243 9704 | **E-mail:** KSB@kaman.com
GERMANY: RWG GERMANY GmbH Medbacher Weg 1 D-91315 Höchstadt a. d. Aisch | **Tel:** +49 (91 93) 50105 100 | **E-mail:** RWG@kaman.com

Spherical Bearings

KR-CNG / 1 Series / AS81820/1

- Narrow, Grooved Outer Race Lined Bore
- -65° F to +325° F / -54° C to +163° C
- KR4 to KR16 Qualified to SAE AS81820 with KAron B Liner

Specifications

Bearing Numbers	B		D		W		H		Ball Dia (Ref)	
	+0.0000 −0.0010	+0.000 −0.025	+0.0000 −0.0005	+0.000 −0.013	+0.0000 -0.0020	+0.000 -0.051	+0.0050 -0.0050	+0.127 -0.127		
	Inch	mm	Inch	mm	Inch	mm	Inch	mm	Inch	mm
KR3-CNG/1	0.1910	4.851	0.5625	14.288	0.2810	7.137	0.2180	5.537	0.4060	10.312
KR4-CNG/1	0.2510	6.375	0.6562	16.667	0.3430	8.712	0.2500	6.350	0.5000	12.700
KR5-CNG/1	0.3135	7.963	0.7500	19.050	0.3750	9.525	0.2810	7.137	0.5620	14.275
KR6-CNG/1	0.3760	9.550	0.8125	20.638	0.4060	10.312	0.3120	7.925	0.6250	15.875
KR7-CNG/1	0.4385	11.138	0.9062	23.017	0.4370	11.100	0.3430	8.712	0.6870	17.450
KR8-CNG/1	0.5010	12.725	1.0000	25.400	0.5000	12.700	0.3900	9.906	0.7810	19.837
KR9-CNG/1	0.5635	14.313	1.0937	27.780	0.5620	14.275	0.4370	11.100	0.8750	22.225
KR10-CNG/1	0.6260	15.900	1.1875	30.163	0.6250	15.875	0.5000	12.700	0.9680	24.587
KR12-CNG/1	0.7510	19.075	1.4375	36.513	0.7500	19.050	0.5930	15.062	1.1870	30.150
KR14-CNG/1	0.8760	22.250	1.5625	39.688	0.8750	22.225	0.7030	17.856	1.3120	33.325
KR16-CNG/1	1.0010	25.425	1.7500	44.450	1.0000	25.400	0.7970	20.244	1.5000	38.100
KR20-CNG/1	1.2510	31.775	2.0000	50.800	1.0930	27.762	0.9420	23.927	1.7810	45.237

Bearing Numbers	Groove Dia / E		Radial Dynamic Load Rating (See Note 1)		Radial Static Limit Load (See Note 1)		Axial Static Limit Load (See Note 1)		Approx Weight		Q° Approx Misalignment
	+0.0000 -0.0080	+0.000 -0.020									
	Inch	mm	lbs	Kn	lbs	Kn	lbs	Kn	lbs	g	
KR3-CNG/1	0.5000	12.700	1500	6.7	3975	17.7	150	0.7	0.02	9.1	10°
KR4-CNG/1	0.5940	15.088	2650	11.8	6040	26.9	430	1.9	0.02	9.1	10°
KR5-CNG/1	0.6500	16.510	3700	16.5	8750	38.9	700	3.1	0.03	13.6	10°
KR6-CNG/1	0.7120	18.085	4900	21.8	10540	46.9	1100	4.9	0.04	18.1	9°
KR7-CNG/1	0.8060	20.472	6700	29.8	13200	58.7	1400	6.2	0.05	22.7	8°
KR8-CNG/1	0.8760	22.250	8250	36.7	17900	79.6	2100	9.3	0.07	31.8	8°
KR9-CNG/1	0.9700	24.638	10500	46.7	23200	103.2	3680	16.4	0.09	40.8	8°
KR10-CNG/1	1.0630	27.000	13250	58.9	30500	135.7	4720	21.0	0.12	54.4	8°
KR12-CNG/1	1.3130	33.350	19400	86.3	46400	206.4	6750	30.0	0.21	95.3	8°
KR14-CNG/1	1.4380	36.525	26750	119.0	62200	276.7	9350	41.6	0.27	122.5	8°
KR16-CNG/1	1.6260	41.300	35250	156.8	82200	365.7	12160	54.1	0.39	176.9	9°
KR20-CNG/1	1.8760	47.650	47800	212.6	95600	425.3	15500	69.0	0.53	240.4	6°

Bearing Materials:

Liner
See Table 2 for liner options

Outer Race
17-4PH (AMS5643) H1150 Cond.

Ball
440C (AMS5630) HRC 55/62 or PH13-8Mo (AMS5629) H1000 Cond. Passivate PH13-8Mo per AMS 2700, Chrome option per AMS 2460 Class 2 (.0002-.0005 thick).

Note 1
Load Ratings Shown are with KAron B Liner System

Schematic Drawing

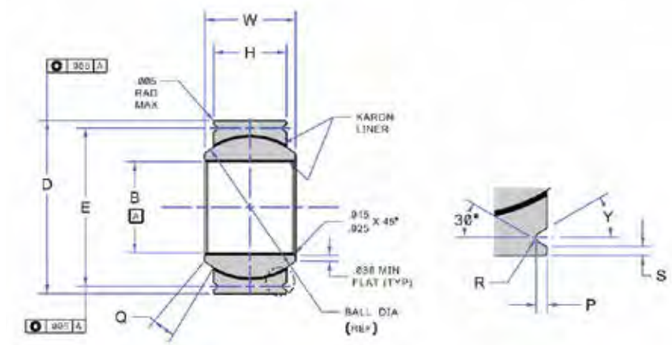

Specifications

KR-CNG / 1 Series / AS81820/1

Bearing Size	Nominal Bore		T .010 OD Oversize		U .020 OD Oversize	
			+0.0000 −0.0005	+0.000 −0.013	+0.0000 −0.0005	+0.000 −0.013
	Inch	mm	Inch	mm	Inch	mm
-3	0.1910	4.851	0.5725	14.542	0.5825	14.796
-4	0.2510	6.375	0.6662	16.921	0.6762	17.175
-5	0.3135	7.963	0.7600	19.304	0.7700	19.558
-6	0.3760	9.550	0.8225	20.892	0.8325	21.146
-7	0.4385	11.138	0.9162	23.271	0.9262	23.525
-8	0.5010	12.725	1.0100	25.654	1.0200	25.908
-9	0.5635	14.313	1.1037	28.034	1.1137	28.288
-10	0.6230	15.824	1.1975	30.417	1.2075	30.671
-12	0.7510	19.075	1.4475	36.767	1.4575	37.021
-14	0.8760	22.250	1.5725	39.942	1.5825	40.196
-16	1.0010	25.425	1.7600	44.704	1.7700	44.958
-20	1.2510	31.775	2.0100	51.054	2.0200	51.308

Bearing Size	Bearing Clearances (K) Type Only				No-Load Rotational Breakaway Torque			
	Radial (max.)		Axial (max.)		Standard		(K) Type	
	Inch	mm	Inch	mm	In.-lbs	Nm	In.-lbs	Nm
3 & 4	0.0007	0.018	0.0028	0.071	0.25 to 5.0	0.03 to 0.56	0 to 0.5	0 to 0.05
5 – 12	0.0007	0.018	0.0028	0.071	0.25 to 8.0	0.03 to 0.90	0 to 1.0	0 to 0.11
14 – 20	0.0010	0.025	0.0040	0.102	0.25 to 12	0.03 to 1.35	0 to 2.0	0 to 0.23

Bearing Size	P		R		S Ref		Y°
	+0.0000 −0.0100	+0.000 −0.254	+0.000 −0.0050	+0.000 −0.127			
	Inch	mm	Inch	mm	Inch	mm	
3 & 5	0.0250	0.635	0.0100	0.254	0.0100	0.254	20/30
5 – 7	0.0350	0.890	0.0170	0.430	0.0200	0.508	30
8 – 20	0.0550	1.400	0.0170	0.430	0.0200	0.508	30

** Millimeter dimensions are for reference only.* | ** Permanently marked in non-functional area.*

Designation

KR-CNG / 1 Series AS81820/1

AS81820/1
Number of Standard

KR
KAron Spherical Bearing Prefix

6
Diameter Code
.3750 ID (ID in 1/16 increments)

CN
Narrow Outer Race

G
Grooved Outer Race

/1
KAron Lined Bore (ID)

B
KAron B liner
(See Table 2 for liner options)

P
Cadmium Plated OD per AMS-QQ-P-416 Option

E
Zinc-Nickel Plated Option OD per AMS2417

W
Chrome Plated Ball OD Option

K
Low Breakaway Torque Option

T
.010 Oversize OD Option

Y
PH13-8Mo Ball option (440C no letter)

Part Number Example
KR 6 - CN G /1 B P W K T Y

Contact

USA: KAMATICS CORPORATION 1330 Blue Hills Avenue Bloomfield, CT 06002 USA | **Tel:** +1 860 243 9704 | **E-mail:** KSB@kaman.com
GERMANY: RWG GERMANY GmbH Medbacher Weg 1 D-91315 Höchstadt a. d. Aisch | **Tel:** +49 (91 93) 50105 100 | **E-mail:** RWG@kaman.com

Spherical Bearings

KR-CW/2 Series / AS81820/2

- Wide, Chamfered Outer Race Lined Bore
- -65º F to +325º F / -54º C to +163º C
- KR5 to KR16 Qualified to SAE AS81820 with KAron B Liner

Specifications

Bearing Numbers	B		D		W		H		Ball Dia (Ref)	
	+0.0000 –0.0010	+0.000 –0.013	+0.0000 –0.0005	+0.000 –0.013	+0.0000 -0.0020	+0.000 -0.051	+0.0050 -0.0050	+0.127 -0.127		
	Inch	mm	Inch	mm	Inch	mm	Inch	mm	Inch	mm
KR3-CW/2	0.1910	4.851	0.6250	15.875	0.4370	11.100	0.3270	8.306	0.5310	13.487
KR4-CW/2	0.2510	6.375	0.6250	15.875	0.4370	11.100	0.3270	8.306	0.5310	13.487
KR5-CW/2	0.3135	7.963	0.6875	17.463	0.4370	11.100	0.3170	8.052	0.5620	14.275
KR6-CW/2	0.3760	9.550	0.8125	20.638	0.5000	12.700	0.4060	10.312	0.6870	17.450
KR7-CW/2	0.4385	11.138	0.9375	23.813	0.5620	14.275	0.4420	11.227	0.7810	19.837
KR8-CW/2	0.5010	12.725	1.0000	25.400	0.6250	15.875	0.5050	12.827	0.8750	22.225
KR9-CW/2	0.5635	14.313	1.1250	28.575	0.6870	17.450	0.5360	13.614	1.0000	25.400
KR10-CW/2	0.6260	15.900	1.1875	30.163	0.7500	19.050	0.5670	14.402	1.0620	26.975
KR12-CW/2	0.7510	19.075	1.3750	34.925	0.8750	22.225	0.6300	16.002	1.2180	30.937
KR14-CW/2	0.8760	22.250	1.6250	41.275	0.8750	22.225	0.7550	19.177	1.3750	34.925
KR16-CW/2	1.0010	25.425	2.1250	53.975	1.3750	34.925	1.0050	25.527	1.8750	47.625
KR20-CW/2	1.2510	31.775	2.3750	60.325	1.5000	38.100	1.1300	28.702	2.0930	53.162

Bearing Numbers	F Chamfer x 45º		Radial Dynamic Load Rating (See Note 1)		Radial Static Limit Load (See Note 1)		Axial Static Limit Load (See Note 1)		Approx Weight		Qº Approx Misalignment
	Inch	mm	lbs	Kn	lbs	Kn	lbs	Kn	lbs	g	
KR3-CW/2	0.0100 / 0.0200	0.254 / 0.508	1500	6.7	3975	17.7	1770	7.9	0.03	13.6	15°
KR4-CW/2	0.0100 / 0.0200	0.254 / 0.508	2650	11.8	5550	24.7	1770	7.9	0.03	13.6	15°
KR5-CW/2	0.0100 / 0.0200	0.254 / 0.508	4450	19.8	9250	41.1	1640	7.3	0.04	18.1	14°
KR6-CW/2	0.0200 / 0.0300	0.508 / 0.760	6200	27.6	13000	57.8	2630	11.7	0.06	27.2	8°
KR7-CW/2	0.0200 / 0.0300	0.508 / 0.760	8250	36.7	17250	76.7	3650	16.2	0.08	36.3	10°
KR8-CW/2	0.0200 / 0.0300	0.508 / 0.760	10600	47.2	21400	95.2	4970	22.1	0.10	45.4	9°
KR9-CW/2	0.0200 / 0.0300	0.508 / 0.760	13200	58.7	25600	113.9	5370	23.9	0.14	63.5	10°
KR10-CW/2	0.0200 / 0.0300	0.508 / 0.760	15150	67.4	29000	129.0	6130	27.3	0.16	72.6	12°
KR12-CW/2	0.0300 / 0.0400	0.760 / 1.020	24500	109.0	37000	164.6	7730	34.4	0.24	108.9	13°
KR14-CW/2	0.0300 / 0.0400	0.760 / 1.020	28750	127.9	56000	249.1	10800	48.0	0.35	158.8	6°
KR16-CW/2	0.0300 / 0.0400	0.760 / 1.020	49300	219.3	103300	459.5	19300	85.9	0.97	440.0	12°
KR20-CW/2	0.0300 / 0.0400	0.760 / 1.020	67500	300.3	136900	609.0	21400	95.2	1.10	499.0	14°

Note 1

Load Ratings Shown are with KAron B Liner System

Schematic Drawing

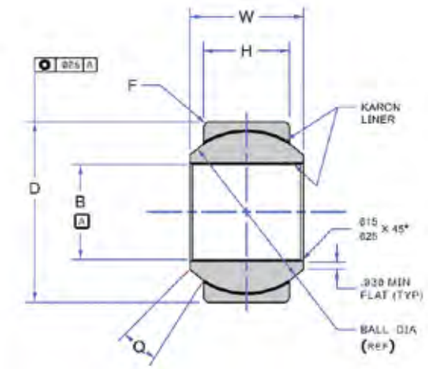

Specifications

KR-CW/2 Series / AS81820/2

Bearing Size	Nominal Bore		T .010 OD Oversize		U .020 OD Oversize	
			+0.0000 –0.0005	+0.000 –0.013	+0.0000 –0.0005	+0.000 –0.013
	Inch	mm	Inch	mm	Inch	mm
-3	0.1910	4.851	0.6350	16.129	0.6450	16.383
-4	0.2510	6.375	0.6350	16.129	0.6450	16.383
-5	0.3135	7.963	0.6975	17.717	0.7075	17.971
-6	0.3760	9.550	0.8225	20.892	0.8325	21.146
-7	0.4385	11.138	0.9475	24.067	0.9575	24.321
-8	0.5010	12.725	1.0100	25.654	1.0200	25.908
-9	0.5635	14.313	1.1350	28.829	1.1450	29.083
-10	0.6260	15.900	1.1975	30.417	1.2075	30.671
-12	0.7510	19.075	1.3850	35.179	1.3950	35.433
-14	0.8760	22.250	1.6350	41.529	1.6450	41.783
-16	1.0010	25.425	2.1350	54.229	2.1450	54.483
-20	1.2510	31.775	2.3850	60.579	2.3950	60.833

Bearing Size	No-Load Rotational Breakaway Torque			
	Standard		(K) Type	
	In.-lbs	Nm	In.-lbs	Nm
3–12	1.0 to 15.0	0.11 to 1.69	0 to 1.0	0 to 0.11
14 – 20	1.0 to 25.0	0.11 to 2.82	0 to 2.0	0 to 0.23

Bearing Size	Bearing Clearances (K) Type Only			
	Radial (max.)		Axial (max.)	
	Inch	mm	Inch	mm
3–12	0.0007	0.018	0.0021	0.053
14 – 20	0.0010	0.025	0.0030	0.076

Designation

KR-CW/2 Series / AS81820/2

AS81820/2
Number of Standard

KR
Basic KAron Spherical Bearing Prefix

6
Diameter Code
.3750 inch ID
(ID in 1/16 inch increments)

CW
Chamfered Wide Outer Race

/2
KAron Lined Bore (ID)

B
KAron B liner
(See Table 2 for liner options)

P
Cadmium Plated OD per AMS-QQ-P-416 Option

E
Zinc-Nickel Plated Option OD per AMS2417

W
Chrome Plated Ball OD Option

K
Low Breakaway Torque Option

T
0.010 inch Oversize OD Option

Y
PH13-8Mo Ball option

Part Number Example
KR 6 - CW /2 B P W K T Y

Bearing Materials:

Liner
See Table 2 for liner options

Outer Race
17-4PH (AMS5643) H1150 Cond.

Ball
440C (AMS5630) HRC 55/62 or PH13-8Mo (AMS5629) H1000 Cond. Passivate PH13-8Mo per AMS 2700, Chrome option per AMS 2460 Class 2 (.0002-.0005 thick).

** Millimeter dimensions are for reference only. | * Permanently marked in non-functional area.*

Contact

USA: KAMATICS CORPORATION 1330 Blue Hills Avenue Bloomfield, CT 06002 USA | **Tel:** +1 860 243 9704 | **E-mail:** KSB@kaman.com
GERMANY: RWG GERMANY GmbH Medbacher Weg 1 D-91315 Höchstadt a. d. Aisch | **Tel:** +49 (91 93) 50105 100 | **E-mail:** RWG@kaman.com

Spherical Bearings

KR-CWG/3 Series / AS81820/3

- Wide, Grooved Outer Race Lined Bore
- -65º F to +325º F / -54º C to +163º C
- KR5 to KR16 Qualified to SAE AS81820 with KAron B Liner

Specifications

Bearing Numbers	B		D		W		H		Ball Dia (Ref)	
	+0.0000 –0.0010	+0.000 –0.025	+0.0000 –0.0005	+0.000 –0.013	+0.0000 -0.0020	+0.000 -0.051	+0.0050 -0.0050	+0.127 -0.127		
	Inch	mm	Inch	mm	Inch	mm	Inch	mm	Inch	mm
KR3-CWG/3	0.1910	4.851	0.6250	15.875	0.4370	11.100	0.3270	8.306	0.5310	13.487
KR4-CWG/3	0.2510	6.375	0.6250	15.875	0.4370	11.100	0.3270	8.306	0.5310	13.487
KR5-CWG/3	0.3135	7.963	0.6875	17.463	0.4370	11.100	0.3170	8.052	0.5620	14.275
KR6-CWG/3	0.3760	9.550	0.8125	20.638	0.5000	12.700	0.4060	10.312	0.6870	17.450
KR7-CWG/3	0.4385	11.138	0.9375	23.813	0.5620	14.275	0.4420	11.227	0.7810	19.837
KR7A-CWG/3	0.4385	11.138	0.9062	23.017	0.5620	14.275	0.4420	11.227	0.7810	19.837
KR8-CWG/3	0.5010	12.725	1.0000	25.400	0.6250	15.875	0.5050	12.827	0.8750	22.225
KR9-CWG/3	0.5635	14.313	1.1250	28.575	0.6870	17.450	0.5360	13.614	1.0000	25.400
KR10-CWG/3	0.6260	15.900	1.1875	30.163	0.7500	19.050	0.5670	14.402	1.0620	26.975
KR12-CWG/3	0.7510	19.075	1.3750	34.925	0.8750	22.225	0.6300	16.002	1.2180	30.937
KR14-CWG/3	0.8760	22.250	1.6250	41.275	0.8750	22.225	0.7550	19.177	1.3750	34.925
KR16-CWG/3	1.0010	25.425	2.1250	53.975	1.3750	34.925	1.0050	25.527	1.8750	47.625
KR20-CWG/3	1.2510	31.775	2.3750	60.325	1.5000	38.100	1.1300	28.702	2.0930	53.162

Bearing Numbers	Groove Dia / E		Radial Dynamic Load Rating (See Note 1)		Radial Static Limit Load (See Note 1)		Axial Static Limit Load (See Note 1)		Approx Weight		Qº Approx Misalignment
	+0.0000 -0.0080	+0.000 -0.020									
	Inch	mm	lbs	Kn	lbs	Kn	lbs	Kn	lbs	g	
KR3-CWG/3	0.5630	14.300	1500	6.7	3975	17.7	1770	7.9	0.03	13.6	15°
KR4-CWG/3	0.5630	14.300	2650	11.8	7100	31.6	1770	7.9	0.03	13.6	15°
KR5-CWG/3	0.6220	15.799	4450	19.8	9300	41.4	1640	7.3	0.04	18.1	14°
KR6-CWG/3	0.7120	18.085	6200	27.6	13000	57.8	2630	11.7	0.06	27.2	8°
KR7-CWG/3	0.8370	21.260	8250	36.7	17300	77.0	3650	16.2	0.08	36.3	10°
KR7A-CWG/3	0.8060	20.472	8250	36.7	17300	77.0	3650	16.2	0.08	36.3	10°
KR8-CWG/3	0.9000	22.860	10500	46.7	21400	95.2	4970	22.1	0.10	45.4	9°
KR9-CWG/3	1.0250	26.035	13200	58.7	26500	117.9	5370	23.9	0.14	63.5	10°
KR10-CWG/3	1.0870	27.610	16150	71.8	29000	129.0	6130	27.3	0.16	72.6	12°
KR12-CWG/3	1.2510	31.775	24500	109.0	37000	164.6	7730	34.4	0.24	108.9	13°
KR14-CWG/3	1.5010	38.125	25750	114.5	56000	249.1	10800	48.0	0.35	158.8	6°
KR16-CWG/3	2.0010	50.825	49300	219.3	103000	458.2	19300	85.9	0.97	440.0	12°
KR20-CWG/3	2.2510	57.175	67500	300.3	140600	625.4	21400	95.2	1.10	499.0	14°

Bearing Materials:

Liner
See Table 2 for liner options

Outer Race
17-4PH (AMS5643) H1150 Cond.

Ball
440C (AMS5630) HRC 55/62 or PH13-8Mo (AMS5629) H1000 Cond. Passivate PH13-8Mo per AMS 2700, Chrome option per AMS 2460 Class 2 (.0002-.0005 thick).

Note 1
Load Ratings Shown are with KAron B Liner System

Schematic Drawing

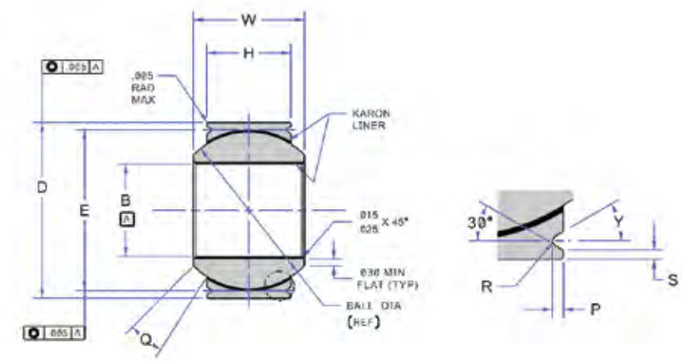

Specifications

KR-CWG/3 Series / AS81820/3

Bearing Size	Nominal Bore		T .010 OD Oversize		U .020 OD Oversize	
			+0.0000 –0.0005	+0.000 –0.013	+0.0000 –0.0005	+0.000 –0.013
	Inch	mm	Inch	mm	Inch	mm
-3	0.1910	4.8514	0.6350	16.129	0.6450	16.383
-4	0.2510	6.375	0.6350	16.129	0.6450	16.383
-5	0.3135	7.963	0.6975	17.717	0.7075	17.971
-6	0.3760	9.550	0.8225	20.892	0.8325	21.146
-7	0.4385	11.138	0.9475	24.067	0.9575	24.321
-7A	0.4385	11.138	0.9162	23.271	0.9262	23.525
-8	0.5010	12.725	1.0100	25.654	1.0200	25.908
-9	0.5635	14.313	1.1350	28.829	1.1450	29.083
-10	0.6230	15.824	1.1975	30.417	1.2075	30.671
-12	0.7510	19.075	1.3850	35.179	1.3975	35.497
-14	0.8760	22.250	1.6350	41.529	1.6450	41.783
-16	1.0010	25.425	2.1350	54.229	2.1450	54.483
-20	1.2510	31.775	2.3850	60.579	2.3975	60.897

Bearing Size	Bearing Clearances (K) Type Only				No-Load Rotational Breakaway Torque			
	Radial (max.)		Axial (max.)		Standard		(K) Type	
	Inch	mm	Inch	mm	In.-lbs	Nm	In.-lbs	Nm
3–12	0.0007	0.018	0.0021	0.051	1.0 to 15.0	0.11 to 1.69	0 to 1.0	0 to 0.11
14 – 20	0.0010	0.025	0.0030	0.076	1.0 to 25.0	0.11 to 2.75	0 to 2.0	0 to 0.23

Bearing Size	P		R		S Ref		Yº
	+0.0000 –0.0010	+0.000 –0.254	+0.000 –0.0050	+0.000 –0.127			
	Inch	mm	Inch	mm	Inch	mm	
3 – 5	0.0250	0.635	0.0100	0.254	0.0100	0.254	20/30
6 – 10	0.0350	0.890	0.0170	0.430	0.0200	0.508	30
12 – 20	0.0550	1.397	0.0170	0.430	0.0200	0.508	30

Designation

KR-CWG/3 Series / AS81820/3

AS81820/3
Number of Standard

KR
KAron Spherical Bearing Prefix

6
Diameter Code
.3750 ID (ID in 1/16 increments)

CW
Wide Chamfered Outer Race

G
Grooved Outer Race

/3
KAron Lined Bore (ID)

B
KAron B liner
(See Table 2 for liner options)

P
Cadmium Plated OD per AMS-QQ-P-416 Option

E
Zinc-Nickel Plated Option OD per AMS2417

W
Chrome Plated Ball OD Option

K
Low Breakaway Torque Option

T
.010 Oversize OD Option

Y
PH13-8Mo Ball option (440C no letter)

Part Number Example
KR 6 - CW G /3 B P W K T Y

** Millimeter dimensions are for reference only. | * Permanently marked in non-functional area.*

Contact

USA: KAMATICS CORPORATION 1330 Blue Hills Avenue Bloomfield, CT 06002 USA | **Tel:** +1 860 243 9704 | **E-mail:** KSB@kaman.com
GERMANY: RWG GERMANY GmbH Medbacher Weg 1 D-91315 Höchstadt a. d. Aisch | **Tel:** +49 (91 93) 50105 100 | **E-mail:** RWG@kaman.com

Spherical Bearings

KR-CE Series / Extended Inner Race, High Misalignment

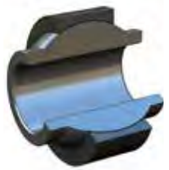

- Extended Inner Race
- High Misalignment
- Chamfered Outer Race

Specifications

Bearing Numbers	B		D		W		H		O	
	+0.0000 –0.0005	+0.000 –0.013	+0.0000 –0.0005	+0.000 –0.013	+0.0000 -0.0020	+0.000 -0.051	+0.0050 -0.0050	+0.127 -0.127	Shoulder Dia (min.)	
	Inch	mm	Inch	mm	Inch	mm	Inch	mm	Inch	mm
KR3-CE	0.1900	4.826	0.5625	14.288	0.5000	12.700	0.2050	5.207	0.3190	8.103
KR4-CE	0.2500	6.350	0.7400	18.796	0.5930	15.062	0.2550	6.477	0.3900	9.906
KR5-CE	0.3125	7.938	0.6875	17.463	0.6250	15.875	0.2550	6.477	0.4180	10.617
KR6-CE	0.3750	9.525	0.9060	23.012	0.8130	20.650	0.3450	8.763	0.5120	13.005
KR8-CE	0.5000	12.700	1.1250	28.575	0.9370	23.800	0.3960	10.058	0.7300	18.542
KR10-CE	0.6250	15.875	1.3750	34.925	1.2000	30.480	0.5670	14.402	0.8560	21.742
KR12-CE	0.7500	19.050	1.5625	39.688	1.2800	32.512	0.6200	15.748	0.9700	24.638
KR16-CE	1.0000	25.400	2.1250	53.975	1.8750	47.625	0.8350	21.209	1.2780	32.461

Bearing Numbers	Ball Dia (Ref)		F Chamfer x 45º		Radial Dynamic Load Rating (See Note 1)		Radial Static Limit Load (See Note 1)		Axial Static Limit Load (See Note 1)	
	Inch	mm	Inch	mm	lbs	Kn	lbs	Kn	lbs	Kn
KR3-CE	0.4370	11.100	0.0100 / 0.0200	0.250 / 0.508	2720	12.1	3740	16.6	380	1.7
KR4-CE	0.5930	15.062	0.0100 / 0.0200	0.250 / 0.508	4420	19.7	7400	32.9	560	2.5
KR5-CE	0.5930	15.062	0.0100 / 0.0200	0.250 / 0.508	4420	19.7	7400	32.9	560	2.5
KR6-CE	0.7810	19.837	0.0200 / 0.0300	0.508 / 0.762	7550	33.6	13200	58.7	1380	6.1
KR8-CE	1.0000	25.400	0.0200 / 0.0300	0.508 / 0.762	10700	47.6	21800	97.0	2200	9.8
KR10-CE	1.2190	30.963	0.0200 / 0.0300	0.508 / 0.762	20100	89.4	39200	174.4	7600	33.8
KR12-CE	1.3750	34.925	0.0300 / 0.0400	0.762 / 1.016	22800	101.4	47000	209.1	10400	46.3
KR16-CE	1.8750	47.625	0.0300 / 0.0400	0.762 / 1.016	37100	165.0	86200	383.5	14000	62.3

Bearing Numbers	Approx Weight		Q° Approx Misalignment
	lbs	g	
KR3-CE	0.03	13.6	15°
KR4-CE	0.04	18.1	25°
KR5-CE	0.04	18.1	20°
KR6-CE	0.06	27.2	22°
KR8-CE	0.16	72.6	20°
KR10-CE	0.25	113.4	20°
KR12-CE	0.45	204.1	20°
KR16-CE	0.80	362.9	22°

Bearing Size	No-Load Rotational Breakaway Torque / Standard	
	In.-lbs	Nm
3 & 4	0-5	0 to 0.56
5–12	0-15	0 to 1.69
16	0-24	0 to 2.71

Schematic Drawing

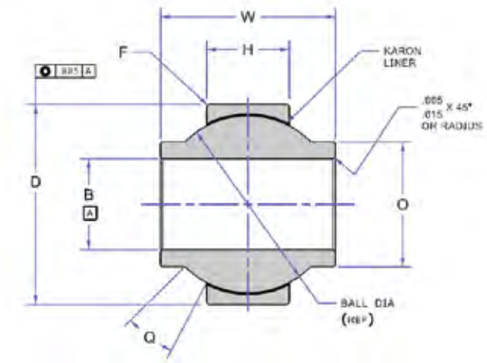

KR-CE Series / Extended Inner Race, High Misalignment

Designation

KR-CE Series

KR
Basic KAron Spherical Bearing Prefix

6
Diameter Code
.3750 inch ID
(ID in 1/16 inch increments)

CE
Extended Inner Race (Ball) Width, Chamfered Outer Race

B
KAron B liner
(See Table 2 for liner options)

P
Cadmium Plated OD per AMS-QQ-P-416 Option

E
Zinc-Nickel Plated Option OD per AMS2417

W
Chrome Plated Ball OD Option

Part Number Example
KR 6 - CE B P W

Bearing Materials:

Liner
See Table 2 for liner options

Outer Race
17-4PH (AMS 5643) H1150 Cond.

Ball
440C (AMS5630) HRC 55/62 or PH13-8Mo (AMS5629) H1000 Cond. Passivate PH13-8Mo per AMS 2700, Chrome option per AMS 2460 Class 2 (.0002-.0005 thick).

Note 1
Load Ratings Shown are with KAron B or KAron BX Liner Systems

** Millimeter dimensions are for reference only. | * Permanently marked in non-functional area.*

Contact

USA: KAMATICS CORPORATION 1330 Blue Hills Avenue Bloomfield, CT 06002 USA | **Tel:** +1 860 243 9704 | **E-mail:** KSB@kaman.com
GERMANY: RWG GERMANY GmbH Medbacher Weg 1 D-91315 Höchstadt a. d. Aisch | **Tel:** +49 (91 93) 50105 100 | **E-mail:** RWG@kaman.com

Spherical Bearings

KR-CEG Series / Extended Inner Race, High Misalignment with Groove

- Extended Inner Race
- High Misalignment
- Grooved Outer Race

Specifications

Bearing Numbers	B		D		W		H		O	
	+0.0000 −0.0005	+0.000 −0.013	+0.0000 −0.0005	+0.000 −0.013	+0.0000 -0.0020	+0.000 -0.051	+0.0050 -0.0050	+0.127 -0.127	Shoulder Dia (min.)	
	Inch	mm	Inch	mm	Inch	mm	Inch	mm	Inch	mm
KR3-CEG	0.1900	4.826	0.5625	14.288	0.5000	12.700	0.2050	5.207	0.3190	8.103
KR4-CEG	0.2500	6.350	0.7400	18.796	0.5930	15.062	0.2550	6.477	0.3900	9.906
KR5-CEG	0.3125	7.938	0.6875	17.463	0.6250	15.875	0.2550	6.477	0.4180	10.617
KR6-CEG	0.3750	9.525	0.9060	23.012	0.8130	20.650	0.3450	8.763	0.5120	13.005
KR8-CEG	0.5000	12.700	1.1250	28.575	0.9370	23.800	0.3960	10.058	0.7300	18.542
KR10-CEG	0.6250	15.875	1.3750	34.925	1.2000	30.480	0.5670	14.402	0.8560	21.742
KR12-CEG	0.7500	19.050	1.5625	39.688	1.2800	32.512	0.6200	15.748	0.9700	24.638
KR16-CEG	1.0000	25.400	2.1250	53.975	1.8750	47.625	0.8350	21.209	1.2780	32.461

Bearing Numbers	Ball Dia (Ref)		Radial Dynamic Load Rating (See Note 1)		Radial Static Limit Load (See Note 1)		Axial Static Limit Load (See Note 1)		Approx Weight		Q° Approx Misalignment
	Inch	mm	lbs	Kn	lbs	Kn	lbs	Kn	lbs	g	
KR3-CE	0.4370	11.100	2720	12.1	3740	16.6	380	1.7	0.03	13.6	15°
KR4-CE	0.5930	15.062	4420	19.7	7400	32.9	560	2.5	0.04	18.1	25°
KR5-CE	0.5930	15.062	4420	19.7	7400	32.9	560	2.5	0.04	18.1	20°
KR6-CE	0.7810	19.837	7550	33.6	13200	58.7	1380	6.1	0.06	27.2	22°
KR8-CE	1.0000	25.400	10700	47.6	21800	97.0	2200	9.8	0.16	72.6	20°
KR10-CE	1.2190	30.963	20100	89.4	39200	174.4	7600	33.8	0.25	113.4	20°
KR12-CE	1.3750	34.925	22800	101.4	47000	209.1	10400	46.3	0.45	204.1	20°
KR16-CE	1.8750	47.625	37100	165.0	86200	383.5	14000	62.3	0.80	362.9	22°

Bearing Size	P		R		S		X	
	+0.0000 −0.0150	+0.000 −0.381	+0.000 −0.0100	+0.000 −0.254	+0.000 −0.0100	+0.000 −0.254	+0.000 −0.0010	+0.000 −0.254
	Inch	mm	Inch	mm	Inch	mm	Inch	mm
3 & 8	0.0300	0.762	0.0150	0.381	0.0200	0.508	0.0450	1.143
10–12	0.0400	1.016	0.0200	0.508	0.0300	0.762	0.0550	1.397
16	0.0600	1.524	0.0200	0.508	0.0300	0.762	0.0800	2.032

Bearing Size	No-Load Rotational Breakaway Torque	
	In.-lbs	Nm
3 & 8	0-5	0 to 0.56
10–12	0-15	0 to 1.69
16	0-24	0 to 2.71

Schematic Drawing

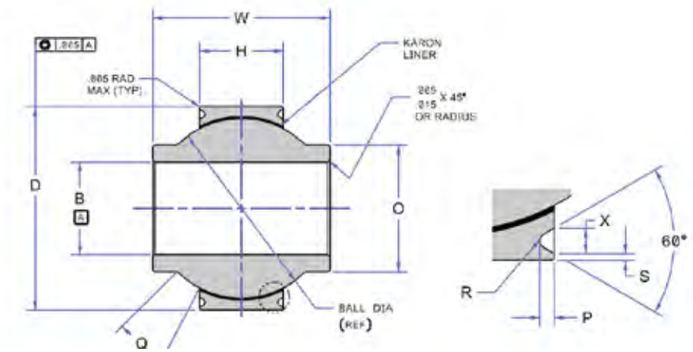

KR-CEG Series / Extended Inner Race, High Misalignment with Groove

Designation

KR-CEG Series

KR
Basic KAron Spherical Bearing Prefix

6
Diameter Code
.3750 inch ID
(ID in 1/16 inch increments)

CE
Extended Inner Race (Ball) Width, Chamfered Outer Race

G
Grooved Outer Race

B
KAron B liner
(See Table 2 for liner options)

P
Cadmium Plated OD per AMS-QQ-P-416 Option

E
Zinc-Nickel Plated Option OD per AMS2417

W
Chrome Plated Ball OD Option

Part Number Example
KR 6 - CE G B P W

Bearing Materials:

Liner
See Table 2 for liner options

Outer Race
17-4PH (AMS 5643) H1150 Cond.

Ball
440C (AMS 5630) HRC 55/62 or PH13-8Mo (AMS5629) H1000 Cond. Passivate PH13-8Mo per AMS 2700, Chrome option per AMS 2460 Class 2 (.0002-.0005 thick).

Note 1
Load Ratings Shown are with KAron B Liner System

** Millimeter dimensions are for reference only. | * Permanently marked in non-functional area.*

Contact

USA: KAMATICS CORPORATION 1330 Blue Hills Avenue Bloomfield, CT 06002 USA | **Tel:** +1 860 243 9704 | **E-mail:** KSB@kaman.com
GERMANY: RWG GERMANY GmbH Medbacher Weg 1 D-91315 Höchstadt a. d. Aisch | **Tel:** +49 (91 93) 50105 100 | **E-mail:** RWG@kaman.com

Spherical Bearings

KR-C Series / Spherical Bearing Miniature

- Spherical Bearing Miniature

Specifications

Bearing Numbers	B		D		W		H	
	+0.0000 −0.0005	+0.000 −0.013	+0.0000 −0.0005	+0.000 −0.013	+0.0000 -0.0050	+0.000 -0.127	+0.0050 -0.0000	+0.127 -0.000
	Inch	mm	Inch	mm	Inch	mm	Inch	mm
KR088-C	0.0880	2.235	0.2500	6.350	0.1250	3.175	0.1000	2.540
KR094-C	0.0938	2.383	0.2812	7.142	0.1550	3.937	0.1200	3.048
KR125-C	0.1250	3.175	0.3620	9.195	0.2500	6.350	0.1720	4.369
KR156-C	0.1560	3.962	0.4687	11.905	0.2810	7.137	0.1870	4.750

Bearing Numbers	E Chamfer x 45º		Suggested Mating Housing Bore Size		Ult. Static Load (lbs) See Notes 1 & 2	
	+0.0100 −0.0000	+0.254 −0.000	+0.0100 −0.0005	+0.254 −0.013		
	Inch	mm	Inch	mm	lbs	kN
KR088-C	0.0100	0.254	0.2500	6.350	550.0	2.2
KR094-C	0.0100	0.254	0.2812	7.142	775.0	2.4
KR125-C	0.0100	0.254	0.3620	9.195	2050.0	3.2
KR156-C	0.0100	0.254	0.4687	11.905	2550.0	4.0

Schematic Drawing

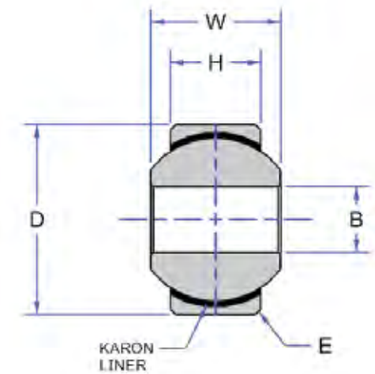

KR-C Series / Spherical Bearing Miniature

Designation

KR-C Series

KR
Basic KAron Spherical Bearing Prefix

0.094
Diameter Code
0.094 ID (Bore Size IN 0.001 Inch Increments)

C
Miniature Spherical Bearings Cartridge

B
KAron B liner
(See Table 2 for liner options)
QQ-P-416 Option

Part Number Example
KR 094 – C B

Bearing Materials:

Liner
Karon See Table 2 for liner options

Outer Race
AMS 5643 (17-4PH) Rc 28 MIN

Ball
AMS 5630 (440C) Rc 55 MIN

Notes
1. Load ratings shown are based on KAron B liner system, See Table 2 for liner options
2. Loads shown are based on bearing components only, bolt/pin shear is not considered.
3. No load rotational breakaway torque = 1 inch pound maximum

** Millimeter dimensions are for reference only. | * Permanently marked in non-functional area.*

Contact

USA: KAMATICS CORPORATION 1330 Blue Hills Avenue Bloomfield, CT 06002 USA | **Tel:** +1 860 243 9704 | **E-mail:** KSB@kaman.com
GERMANY: RWG GERMANY GmbH Medbacher Weg 1 D-91315 Höchstadt a. d. Aisch | **Tel:** +49 (91 93) 50105 100 | **E-mail:** RWG@kaman.com

Rod Ends

PRODUCT OVERVIEW

KAMATICS·RWG

Rod Ends

PRODUCT OVERVIEW

Table of Contents

PRODUCT	PAGE
Ball Bearing	
EN4035	190-191
EN4036	192-193
FC...M / FCN...M	194-195
ASNA2579E	196-197
NSA8159	198-199
REP / RAP	200-201
REP...F	202-203
Metal to Metal	
EN6055	204-207
EN6056	208-209

PRODUCT	PAGE
Fraslip Fabric Liner	
FMW3E_.4 / NSA8143	210-211
FMW3F_.4 / NSA8149	212-213
REM	214-215
REF	216-217
KAron Molded Liner	
KR-F / AS81935/2	218-219
KR-M / AS81935/1	220-221
KR-FS / Miniature	222-223
KR-MS / Miniature	224-225

Rod Ends

EN4035

- Male Thread
- Double Row
- Self-Aligning
- CRES / Titanium

Specifications

Diameter Code	d		D		B		C		I (min.)		G
	-0.008	-0.0003	+0.200	+0.0079	-0.120	-0.0047	+0.100	+0.0039			4h 6h
	mm	Inch	mm	Inch	mm	Inch	mm	Inch	mm	Inch	mm
05	5.000	0.1969	23.000	0.9055	12.000	0.4724	8.500	0.3346	33.000	1.2992	MJ8 x 1.00
06	6.000	0.2362	26.000	1.0236	14.000	0.5512	10.500	0.4134	37.000	1.4567	MJ10 x 1.25
08	8.000	0.3150	32.000	1.2598	15.000	0.5906	10.500	0.4134	42.000	1.6535	MJ12 x 1.25
10	10.000	0.3937	38.000	1.4961	20.000	0.7874	14.000	0.5512	48.000	1.8898	MJ14 x 1.50

Diameter Code	L		d_1 (min.)		F (min.)		P		W	
	±0.500	±0.0197					±0.200	±0.0079	±0.100	±0.0039
	mm	Inch	mm	Inch	mm	Inch	mm	Inch	mm	Inch
05	48.000	1.8898	7.600	0.2992	18.000	0.7087	1.400	0.0551	1.600	0.0630
06	54.000	2.1260	8.600	0.3386	23.000	0.9055	1.400	0.0551	2.400	0.0945
08	62.000	2.4409	11.100	0.4370	27.000	1.0630	2.000	0.0787	2.400	0.0945
10	73.000	2.8740	13.600	0.5354	31.000	1.2205	2.000	0.0787	3.200	0.1260

Diameter Code	Z		Starting Torque				Static Radial Limit Load		Static Axial Limit Load		Weight	
	-0.100	-0.0039	Sealed		Shielded							
	mm	Inch	Nmm	Ozf-in	Nmm	Ozf-in	kN	lbs	kN	lbs	g	lbs
05	6.600	0.2598	9.800	1.3916	6.500	0.9230	3.70	832	1.16	261	21	0.046
06	8.000	0.3150	10.500	1.4910	6.900	0.9798	5.70	1281	1.78	400	32	0.070
08	10.200	0.4016	24.000	3.4080	15.900	2.2578	9.10	2046	2.84	638	49	0.108
10	12.200	0.4803	28.500	4.0470	18.800	2.6696	14.10	3170	4.41	991	99	0.218

Schematic Drawing

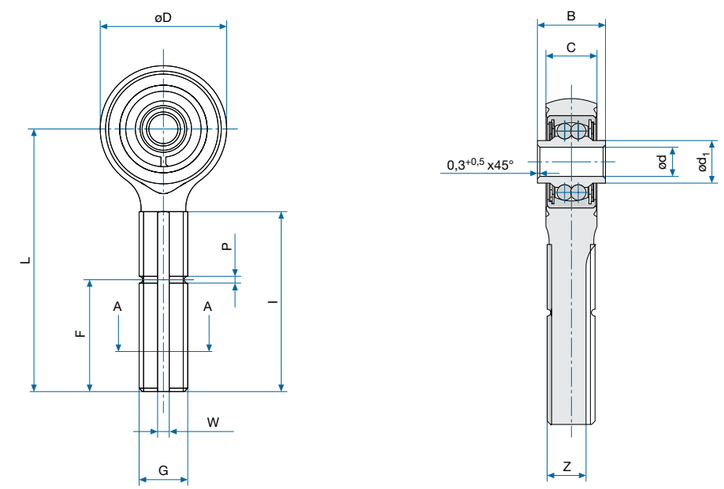

SECTION A-A

Code K Code M

EN4035

Designation

EN4035
Number of Standard

L
Thread
L: Left Hand
R: Right Hand

06
Diameter Code

E
Protection
E:Sealed
P:Shielded

K
Longitudinal Groove
N: Without Groove
M: See Schematic Drawing
K: See Schematic Drawing

A
Grease Type
A: NATO G 354 / MIL-PRF-23827
B: NATO G 395 / MIL-PRF-81322

T
Surface Treatment
No Code: None
T: Inner + Outer Ring Passivated

Part Number Example
EN4035 L 06 P K A T

Bearing Materials:

Rod End
EN3353 / 3.7164.7 / Ti6Al4V

Rings + Balls
EN2030 / 1.3544.9 / AISI 440C

Technical Specification
per EN2067

Radial Play (mm)
0.002-0.007

Axial Play (mm)
0.08 max.

** Inch dimensions are for reference only. | * Permanently marked in non-functional area.*

Contact

USA: KAMATICS CORPORATION 1330 Blue Hills Avenue Bloomfield, CT 06002 USA | **Tel:** +1 860 243 9704 | **E-mail:** KSB@kaman.com
GERMANY: RWG GERMANY GmbH Medbacher Weg 1 D-91315 Höchstadt a. d. Aisch | **Tel:** +49 (91 93) 50105 100 | **E-mail:** RWG@kaman.com

Rod Ends

EN4036

- Male Thread
- Double Row
- Self-Aligning
- CRES

Specifications

Diameter Code	d		D		B		C		I (min.)		G
	-0.008	-0.0003	+0.200	+0.0079	-0.120	-0.0047	+0.100	+0.0039			4h 6h
	mm	Inch	mm	Inch	mm	Inch	mm	Inch	mm	Inch	mm
05	5.000	0.1969	20.500	0.8071	12.000	0.4724	8.500	0.3346	33.000	1.2992	MJ8 x 1.00
06	6.000	0.2362	22.500	0.8858	14.000	0.5512	10.000	0.3937	37.000	1.4567	MJ10 x 1.25
08	8.000	0.3150	28.500	1.1220	15.000	0.5906	10.000	0.3937	42.000	1.6535	MJ12 x 1.25
10	10.000	0.3937	32.000	1.2598	20.000	0.7874	14.000	0.5512	48.000	1.8898	MJ14 x 1.50

Diameter Code	L		d_1 (min.)		F (min.)		P		W	
	±0.500	±0.0197					±0.200	±0.0079	+0.100	+0.0039
	mm	Inch	mm	Inch	mm	Inch	mm	Inch	mm	Inch
05	48.000	1.8898	7.600	0.2992	18.000	0.7087	1.400	0.0551	1.600	0.0630
06	54.000	2.1260	8.600	0.3386	23.000	0.9055	1.400	0.0551	2.400	0.0945
08	62.000	2.4409	11.100	0.4370	27.000	1.0630	2.000	0.0787	2.400	0.0945
10	73.000	2.8740	13.600	0.5354	31.000	1.2205	2.000	0.0787	3.200	0.1260

Diameter Code	Z		Starting Torque				Static Radial Limit Load		Static Axial Limit Load		Weight	
	-0.100	-0.0039	Sealed		Shielded							
	mm	Inch	Nmm	Ozf-in	Nmm	Ozf-in	kN	lbs	kN	lbs	g	lbs
05	6.600	0.2598	6.500	0.9230	4.300	0.6106	4.70	1057	1.47	330	35	0.077
06	8.000	0.3150	7.000	0.9940	4.600	0.6532	6.75	1517	2.11	474	60	0.132
08	10.200	0.4016	16.000	2.2720	10.600	1.5052	8.90	2001	2.78	625	85	0.187
10	12.200	0.4803	19.000	2.6980	12.500	1.7750	14.00	3147	4.38	985	130	0.286

Schematic Drawing

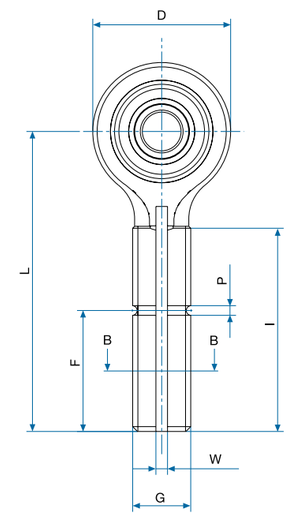

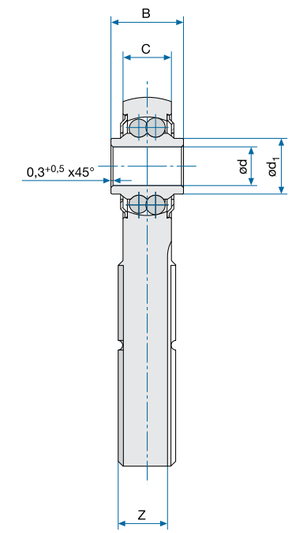

SECTION B-B

Code M Code K

EN4036

Designation

EN4036
Number of Standard

R
Thread
R: Right Hand
L: Left Hand

06
Diameter Code

P
Protection
E:Sealed
P:Shielded

K
Longitudinal Groove
N: Without Groove
M: See Schematic Drawing
K: See Schematic Drawing

A
Grease Type
A: NATO G 354 / MIL-PRF-23827
B: NATO G 395 / MIL-PRF-81322

T
Surface Treatment
No Code: Rod End Passivated
T: Bearing + Rod End Passivated

Part Number Example
EN4036 R 06 E K A T

Bearing Materials:

Rod End
EN2136 / 1.4044 / AISI 431 / BS S80

Rings + Balls
EN2030 / 1.3544.9 / 1.3544.9 / AISI 440C

Technical Specification
EN2067

Radial Play (mm)
0.001-0.005

Axial Play (mm)
0.08 max.

** Inch dimensions are for reference only. | * Permanently marked in non-functional area.*

Contact

USA: KAMATICS CORPORATION 1330 Blue Hills Avenue Bloomfield, CT 06002 USA | **Tel:** +1 860 243 9704 | **E-mail:** KSB@kaman.com
GERMANY: RWG GERMANY GmbH Medbacher Weg 1 D-91315 Höchstadt a. d. Aisch | **Tel:** +49 (91 93) 50105 100 | **E-mail:** RWG@kaman.com

Rod Ends

FC...M / FCN...M

- Male Thread
- Double Row
- Self-Aligning
- Dimensions According to EN2492

Specifications

Type	d		D		B		C		I		G
	-0.008	-0.0003	+0.200	+0.0079	-0.100	-0.0039	+0.100	+0.0039	+1.000	+0.0394	4h 6h
	mm	Inch	mm	Inch	mm	Inch	mm	Inch	mm	Inch	
FC5M	5.000	0.1969	20.500	0.8071	12.000	0.4724	8.500	0.3346	33.000	1.2992	M8 x 1.00
FC5MJ	5.000	0.1969	20.500	0.8071	12.000	0.4724	8.500	0.3346	33.000	1.2992	MJ8 x 1.00
FCN6M	6.000	0.2362	22.500	0.8858	14.000	0.5512	10.000	0.3937	37.000	1.4567	M10 x 1.00
FCN6MJ	6.000	0.2362	22.500	0.8858	14.000	0.5512	10.000	0.3937	37.000	1.4567	MJ10 x 1.25
FCN8M	8.000	0.3150	28.500	1.1220	15.000	0.5906	10.000	0.3937	42.000	1.6535	M12 x 1.00
FCN8/15M	8.000	0.3150	28.500	1.1220	15.000	0.5906	10.000	0.3937	42.000	1.6535	M12 x 1.50
FCN8MJ	8.000	0.3150	28.500	1.1220	15.000	0.5906	10.000	0.3937	42.000	1.6535	MJ12 x 1.25
FCN10M	10.000	0.3937	32.000	1.2598	20.000	0.7874	14.000	0.5512	48.000	1.8898	M14 x 1.50
FCN10/10M	10.000	0.3937	32.000	1.2598	20.000	0.7874	14.000	0.5512	48.000	1.8898	M14 x 1.00
FCN10MJ	10.000	0.3937	32.000	1.2598	20.000	0.7874	14.000	0.5512	48.000	1.8898	MJ14 x 1.50

Designation

FCN M
Number of Series

10 J
Diameter and Thread Code
J: MJ Thread
No Code: M thread

E
Protection
E: Sealed
No Code: Shielded

G
Thread
G: Left Hand
No Code: Right Hand

K
Longitudinal Groove
K: With Groove
No Code: Without Groove

A
Grease Type
A: NATO G 354 / MIL-PRF-23827
B: NATO G 395 / MIL-PRF-81322

T
Surface Treatment
No Code: Rod End Passivated
T: Inner Ring + Rod End Passivated

Part Number Example
FCN 10 M J E G K A T

Bearing Materials:

Rod End
EN2099 / 1.6657.9 / BS S157

Rings + Balls
EN2031 / 1.3505.9 / AISI E 52100

Technical Specification
EN2067

Radial Play (mm)
0.02 max.

Axial Play (mm)
0.08 max.

** Inch dimensions are for reference only. | * Permanently marked in non-functional area.*

Schematic Drawing

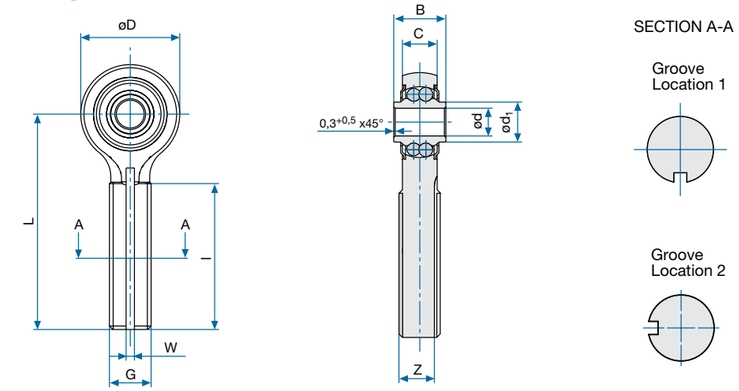

Specifications

FC...M / FCN...M

Type	L		d_1 (min.)		F		P		W	
	±0.500	±0.0197			+0.400	+0.0157	+0.100	+0.0039	+0.100	+0.0039
	mm	Inch	mm	Inch	mm	Inch	mm	Inch	mm	Inch
FC5M	48.000	1.8898	7.700	0.3031	18.000	0.7087	1.400	0.0551	1.600	0.0630
FC5MJ	48.000	1.8898	7.700	0.3031	18.000	0.7087	1.400	0.0551	1.600	0.0630
FCN6M	54.000	2.1260	8.600	0.3386	22.000	0.8661	1.400	0.0551	2.400	0.0945
FCN6MJ	54.000	2.1260	8.600	0.3386	22.000	0.8661	1.700	0.0669	2.400	0.0945
FCN8M	62.000	2.4409	10.800	0.4252	25.000	0.9843	1.400	0.0551	2.400	0.0945
FCN8/15M	62.000	2.4409	10.800	0.4252	25.000	0.9843	2.000	0.0787	2.400	0.0945
FCN8MJ	62.000	2.4409	10.800	0.4252	25.000	0.9843	1.700	0.0669	2.400	0.0945
FCN10M	73.000	2.8740	13.800	0.5433	31.000	1.2205	2.000	0.0787	3.200	0.1260
FCN10/10M	73.000	2.8740	13.800	0.5433	31.000	1.2205	1.400	0.0551	3.200	0.1260
FCN10MJ	73.000	2.8740	13.800	0.5433	31.000	1.2205	2.000	0.0787	3.200	0.1260

Type	Z		Starting Torque				Static Radial Limit Load		Weight	
	-0.100	-0.0039	Sealed		Shielded					
	mm	Inch	Nmm	Ozf-in	Nmm	Ozf-in	kN	lbs	g	lbs
FC5M	6.600	0.2598	2.000	0.2840	1.000	0.1420	4.7	1057	35	0.077
FC5MJ	6.600	0.2598	2.000	0.2840	1.000	0.1420	4.7	1057	35	0.077
FCN6M	8.000	0.3150	4.000	0.5680	2.000	0.2840	6.8	1529	50	0.110
FCN6MJ	8.000	0.3150	4.000	0.5680	2.000	0.2840	6.8	1529	50	0.110
FCN8M	10.200	0.4016	10.000	1.4200	5.000	0.7100	10.8	2428	80	0.176
FCN8/15M	10.200	0.4016	10.000	1.4200	5.000	0.7100	10.8	2428	80	0.176
FCN8MJ	10.200	0.4016	10.000	1.4200	5.000	0.7100	10.8	2428	80	0.176
FCN10M	12.200	0.4803	12.000	1.7040	7.000	0.9940	14.0	3147	130	0.286
FCN10/10M	12.200	0.4803	12.000	1.7040	7.000	0.9940	14.0	3147	130	0.286
FCN10MJ	12.200	0.4803	12.000	1.7040	7.000	0.9940	14.0	3147	130	0.286

Contact

USA: KAMATICS CORPORATION 1330 Blue Hills Avenue Bloomfield, CT 06002 USA | **Tel:** +1 860 243 9704 | **E-mail:** KSB@kaman.com
GERMANY: RWG GERMANY GmbH Medbacher Weg 1 D-91315 Höchstadt a. d. Aisch | **Tel:** +49 (91 93) 50105 100 | **E-mail:** RWG@kaman.com

Rod Ends

ASNA2579E

- Male Thread
- Double Row
- Self-Aligning
- CRES

Specifications

Diameter Code	d		D		B		C		L		Groove Location	G	I	
	-0.0127	-0.0005	±0.254	±0.0100	-0.127	-0.0050	±0.127	±0.0050	±0.250	±0.0098		UNF-3A	±0.500	±0.0197
	mm	Inch	mm	Inch	mm	Inch	mm	Inch	mm	Inch			mm	Inch
41	6.350	0.2500	22.500	0.8858	14.000	0.5512	10.000	0.3937	54.000	2.1260	1	.2500-28	27.00	1.06
42	6.350	0.2500	22.500	0.8858	14.000	0.5512	10.000	0.3937	54.000	2.1260	1	.3125-24	37.00	1.46
43	6.350	0.2500	22.500	0.8858	14.000	0.5512	10.000	0.3937	54.000	2.1260	2	.3750-24	37.00	1.46
44	6.350	0.2500	22.500	0.8858	14.000	0.5512	10.000	0.3937	60.000	2.3622	1	.4375-20	42.00	1.65
45	6.350	0.2500	22.500	0.8858	14.000	0.5512	10.000	0.3937	77.500	3.0512	1	.5000-20	52.00	2.05
46	6.350	0.2500	22.500	0.8858	14.000	0.5512	10.000	0.3937	85.000	3.3465	1	.5625-18	59.00	2.32
47	6.350	0.2500	22.500	0.8858	14.000	0.5512	10.000	0.3937	80.000	3.1496	1	.6250-18	63.00	2.48
51	7.938	0.3125	28.500	1.1220	15.000	0.5906	10.000	0.3937	60.000	2.3622	1	.3125-24	37.00	1.46
52	7.938	0.3125	28.500	1.1220	15.000	0.5906	10.000	0.3937	60.000	2.3622	1	.3750-24	37.00	1.46
53	7.938	0.3125	28.500	1.1220	15.000	0.5906	10.000	0.3937	62.000	2.4409	2	.4375-20	42.00	1.65
54	7.938	0.3125	28.500	1.1220	15.000	0.5906	10.000	0.3937	74.000	2.9134	1	.5000-20	52.00	2.05
55	7.938	0.3125	28.500	1.1220	15.000	0.5906	10.000	0.3937	80.000	3.1496	1	.5625-18	59.00	2.32
56	7.938	0.3125	28.500	1.1220	15.000	0.5906	10.000	0.3937	83.000	3.2677	1	.6250-18	63.00	2.48
61	9.525	0.3750	32.000	1.2598	20.000	0.7874	14.000	0.5512	62.000	2.4409	1	.3750-24	37.00	1.46
62	9.525	0.3750	32.000	1.2598	20.000	0.7874	14.000	0.5512	67.000	2.6378	1	.4375-20	42.00	1.65
63	9.525	0.3750	32.000	1.2598	20.000	0.7874	14.000	0.5512	75.000	2.9528	1	.5000-20	52.00	2.05
64	9.525	0.3750	32.000	1.2598	20.000	0.7874	14.000	0.5512	73.000	2.8740	2	.5625-18	48.00	1.89
65	9.525	0.3750	32.000	1.2598	20.000	0.7874	14.000	0.3937	85.000	3.3465	1	.6250-18	63.00	2.48

Designation

ASNA2579
Number of Standard

E
Protection
E: Sealed

41
Diameter Code

G
Thread
G: Left Hand
D: Right Hand

Part Number Example
ASNA2579 E 41 G

Bearing Materials:

Rod End
EN2136 / 1.4044.6 / AISI 431 / BS S80; Cadmium Plated

Rings + Balls
EN2030 / 1.3544.9 / AISI 440C

** Inch dimensions are for reference only. | * Permanently marked in non-functional area.*

Schematic Drawing

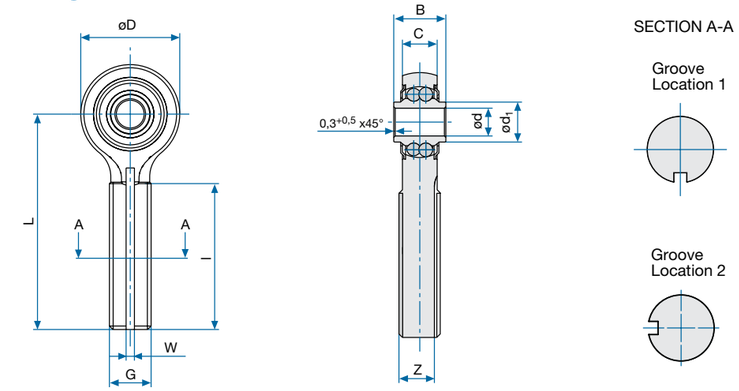

Specifications

ASNA2579E

Diameter Code	d_1		W		Z		Starting Torque		Axial Play (max.)		Static Radial Limit Load		Weight	
	-0.150	-0.0059	+0.127	+0.0050	-0.127	-0.0050								
	mm	Inch	mm	Inch	mm	Inch	Nm	In-lbs	mm	Inch	kN	lbs	g	lbs
41	8.400	0.3307	1.600	0.0630	5.110	0.2012	0.150	1.3274	0.080	0.0031	6.80	1529	37	0.081
42	8.400	0.3307	1.600	0.0630	6.600	0.2598	0.150	1.3274	0.080	0.0031	6.80	1529	41	0.090
43	8.400	0.3307	2.400	0.0945	7.900	0.3110	0.150	1.3274	0.080	0.0031	6.80	1529	46	0.101
44	8.400	0.3307	2.400	0.0945	9.400	0.3701	0.150	1.3274	0.080	0.0031	6.80	1529	56	0.123
45	8.400	0.3307	2.400	0.0945	11.070	0.4358	0.150	1.3274	0.080	0.0031	6.80	1529	73	0.161
46	8.400	0.3307	3.200	0.1260	12.140	0.4780	0.150	1.3274	0.080	0.0031	6.80	1529	77	0.169
47	8.400	0.3307	3.200	0.1260	13.700	0.5394	0.150	1.3274	0.080	0.0031	6.80	1529	98	0.216
51	10.800	0.4252	1.600	0.0630	6.600	0.2598	0.200	1.7699	0.080	0.0031	8.89	1998	60	0.132
52	10.800	0.4252	2.400	0.0945	7.900	0.3110	0.200	1.7699	0.080	0.0031	8.89	1998	64	0.141
53	10.800	0.4252	2.400	0.0945	9.400	0.3701	0.200	1.7699	0.080	0.0031	8.89	1998	71	0.156
54	10.800	0.4252	2.400	0.0945	11.070	0.4358	0.200	1.7699	0.080	0.0031	8.89	1998	86	0.189
55	10.800	0.4252	3.200	0.1260	12.140	0.4780	0.200	1.7699	0.080	0.0031	8.89	1998	103	0.227
56	10.800	0.4252	3.200	0.1260	13.700	0.5394	0.200	1.7699	0.080	0.0031	8.89	1998	114	0.251
61	13.800	0.5433	2.400	0.0945	7.900	0.3110	0.200	1.7699	0.080	0.0031	14.00	3147	94	0.207
62	13.800	0.5433	2.400	0.0945	9.400	0.3701	0.200	1.7699	0.080	0.0031	14.00	3147	106	0.233
63	13.800	0.5433	2.400	0.0945	11.070	0.4358	0.200	1.7699	0.080	0.0031	14.00	3147	122	0.268
64	13.800	0.5433	3.200	0.1260	12.140	0.4780	0.200	1.7699	0.080	0.0031	14.00	3147	132	0.290
65	13.800	0.5433	3.200	0.1260	13.700	0.5394	0.200	1.7699	0.080	0.0031	14.00	3147	144	0.317

Contact

USA: KAMATICS CORPORATION 1330 Blue Hills Avenue Bloomfield, CT 06002 USA | **Tel:** +1 860 243 9704 | **E-mail:** KSB@kaman.com
GERMANY: RWG GERMANY GmbH Medbacher Weg 1 D-91315 Höchstadt a. d. Aisch | **Tel:** +49 (91 93) 50105 100 | **E-mail:** RWG@kaman.com

Rod Ends

NSA8159

- Male Thread
- Double Row
- Self-Aligning

Schematic Drawing

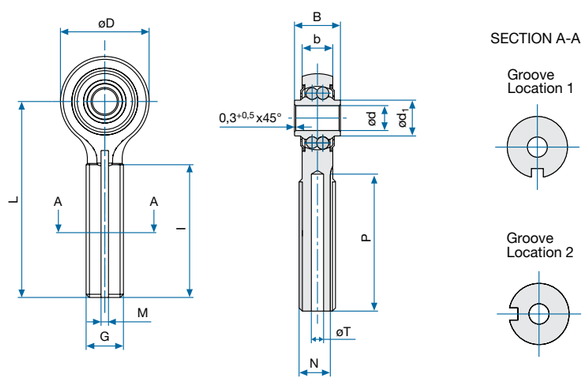

Specifications

Right Hand Thread	Left Hand Thread	d		D		B		b		L	
		-0.0127	-0.0005	±0.250	±0.0098	-0.120	-0.0047	±0.120	±0.0047	±0.250	±0.0098
		mm	Inch	mm	Inch	mm	Inch	mm	Inch	mm	Inch
010	011	6.350	0.2500	22.500	0.8858	14.000	0.5512	10.000	0.3937	54.000	2.1260
012	013	6.350	0.2500	22.500	0.8858	14.000	0.5512	10.000	0.3937	54.000	2.1260
014	015	6.350	0.2500	22.500	0.8858	14.000	0.5512	10.000	0.3937	54.000	2.1260
016	017	6.350	0.2500	22.500	0.8858	14.000	0.5512	10.000	0.3937	60.000	2.3622
018	019	6.350	0.2500	22.500	0.8858	14.000	0.5512	10.000	0.3937	77.500	3.0512
020	021	6.350	0.2500	22.500	0.8858	14.000	0.5512	10.000	0.3937	85.000	3.3465
022	023	6.350	0.2500	22.500	0.8858	14.000	0.5512	10.000	0.3937	80.000	3.1496
024	025	7.938	0.3125	28.500	1.1220	15.000	0.5906	10.000	0.3937	60.000	2.3622
026	027	7.938	0.3125	28.500	1.1220	15.000	0.5906	10.000	0.3937	60.000	2.3622
028	029	7.938	0.3125	28.500	1.1220	15.000	0.5906	10.000	0.3937	62.000	2.4409
030	031	7.938	0.3125	28.500	1.1220	15.000	0.5906	10.000	0.3937	74.000	2.9134
032	033	7.938	0.3125	28.500	1.1220	15.000	0.5906	10.000	0.3937	80.000	3.1496
034	035	7.938	0.3125	28.500	1.1220	15.000	0.5906	10.000	0.3937	83.000	3.2677
036	037	9.525	0.3750	32.000	1.2598	20.000	0.7874	14.000	0.5512	62.000	2.4409
038	039	9.525	0.3750	32.000	1.2598	20.000	0.7874	14.000	0.5512	67.000	2.6378
040	041	9.525	0.3750	32.000	1.2598	20.000	0.7874	14.000	0.5512	75.000	2.9528
042	043	9.525	0.3750	32.000	1.2598	20.000	0.7874	14.000	0.5512	73.000	2.8740
044	045	9.525	0.3750	32.000	1.2598	20.000	0.7874	14.000	0.5512	85.000	3.3465

Designation

NSA8159
Number of Standard

014
Diameter and Thread Code

E
Protection
E: Sealed
P: Shielded

A
Material Ring + Balls
A: EN2031 / 1.3505.9 / AISI E 52100
No Code: EN2030 / 1.3544.9 / AISI 440C
Grease Type: NATO G 354 / MIL-PRF-23827

Part Number Example
NSA8159 014 E A

Bearing Materials:

Rod End
EN2099 / 1.6657.9 / BS S157; Cadmium Plated

Technical Specification
MIL-B-6093

** Inch dimensions are for reference only. | * Permanently marked in non-functional area.*

Specifications

NSA8159

Right Hand Thread	Left Hand Thread	Groove Location	G	l		P		T		d_1	
			UNF-3A	±0.500	±0.0197	-1.000	-0.0394	-0.250	-0.0098		
				mm	Inch	mm	Inch	mm	Inch	mm	Inch
010	011	1	.2500-28	27.000	1.0630	-	-	-	-	8.400	0.3307
012	013	1	.3125-24	37.000	1.4567	-	-	-	-	8.400	0.3307
014	015	2	.3750-24	37.000	1.4567	-	-	-	-	8.400	0.3307
016	017	1	.4375-20	42.000	1.6535	-	-	-	-	8.400	0.3307
018	019	1	.5000-20	52.000	2.0472	56.000	2.2047	4.000	0.1575	8.400	0.3307
020	021	1	.5625-18	59.000	2.3228	63.000	2.4803	4.000	0.1575	8.400	0.3307
022	023	1	.6250-18	63.000	2.4803	65.000	2.5591	6.000	0.2362	8.400	0.3307
024	025	1	.3125-24	37.000	1.4567	-	-	-	-	10.800	0.4252
026	027	1	.3750-24	37.000	1.4567	-	-	-	-	10.800	0.4252
028	029	2	.4375-20	42.000	1.6535	-	-	-	-	10.800	0.4252
030	031	1	.5000-20	52.000	2.0472	55.000	2.1654	4.000	0.1575	10.800	0.4252
032	033	1	.5625-18	59.000	2.3228	61.000	2.4016	4.000	0.1575	10.800	0.4252
034	035	1	.6250-18	63.000	2.4803	65.000	2.5591	6.000	0.2362	10.800	0.4252
036	037	1	.3750-24	37.000	1.4567	-	-	-	-	13.800	0.5433
038	039	1	.4375-20	42.000	1.6535	-	-	-	-	13.800	0.5433
040	041	1	.5000-20	52.000	2.0472	-	-	-	-	13.800	0.5433
042	043	2	.5625-18	48.000	1.8898	-	-	-	-	13.800	0.5433
044	045	1	.6250-18	63.000	2.4803	65.000	2.5591	6.000	0.2362	13.800	0.5433

Right Hand Thread	Left Hand Thread	M		N		Axial Play (max.)		Static Radial Limit Load		Weight	
		+0.127	+0.0050	-0.127	-0.0050						
		mm	Inch	mm	Inch	mm	Inch	kN	lbs	g	lbs
010	011	1.570	0.0618	5.110	0.2012	0.080	0.0031	6.81	1531	37	0.081
012	013	1.570	0.0618	6.600	0.2598	0.080	0.0031	6.81	1531	41	0.090
014	015	2.360	0.0929	7.900	0.3110	0.080	0.0031	6.81	1531	46	0.101
016	017	2.360	0.0929	9.400	0.3701	0.080	0.0031	6.81	1531	56	0.123
018	019	2.360	0.0929	11.070	0.4358	0.080	0.0031	6.81	1531	73	0.161
020	021	3.180	0.1252	12.140	0.4780	0.080	0.0031	6.81	1531	77	0.169
022	023	3.180	0.1252	13.740	0.5409	0.080	0.0031	6.81	1531	98	0.216
024	025	1.570	0.0618	6.600	0.2598	0.080	0.0031	10.78	2423	60	0.132
026	027	2.360	0.0929	7.900	0.3110	0.080	0.0031	10.78	2423	64	0.141
028	029	2.360	0.0929	9.400	0.3701	0.080	0.0031	10.78	2423	71	0.156
030	031	2.360	0.0929	11.070	0.4358	0.080	0.0031	10.78	2423	86	0.189
032	033	3.180	0.1252	12.140	0.4780	0.080	0.0031	10.78	2423	103	0.227
034	035	3.180	0.1252	13.740	0.5409	0.080	0.0031	10.78	2423	114	0.251
036	037	2.360	0.0929	7.900	0.3110	0.080	0.0031	12.75	2866	94	0.207
038	039	2.360	0.0929	9.400	0.3701	0.080	0.0031	12.75	2866	106	0.233
040	041	2.360	0.0929	11.070	0.4358	0.080	0.0031	12.75	2866	122	0.268
042	043	3.180	0.1252	12.140	0.4780	0.080	0.0031	12.75	2866	132	0.290
044	045	3.180	0.1252	13.740	0.5409	0.080	0.0031	12.75	2866	144	0.317

Contact

USA: KAMATICS CORPORATION 1330 Blue Hills Avenue Bloomfield, CT 06002 USA | **Tel:** +1 860 243 9704 | **E-mail:** KSB@kaman.com
GERMANY: RWG GERMANY GmbH Medbacher Weg 1 D-91315 Höchstadt a. d. Aisch | **Tel:** +49 (91 93) 50105 100 | **E-mail:** RWG@kaman.com

Rod Ends

REP / RAP

- Male Thread
- Double Row
- Self-Aligning
- Dimensions According to AS21151

Specifications

Type	d		D		B		C		L		Weight	
	-0.007	-0.0003	±0.254	±0.0100	-0.127	-0.0050	±0.254	±0.0100	±0.254	±0.0100		
	mm	Inch	mm	Inch	mm	Inch	mm	Inch	mm	Inch	g	lbs
REP 3M 3	4.826	0.1900	19.837	0.7810	11.100	0.4370	8.331	0.3280	34.925	1.3750	18	0.040
REP 3M 4-6	4.826	0.1900	19.837	0.7810	11.100	0.4370	8.331	0.3280	39.700	1.5630	23	0.051
REP 3M 6-2N	4.826	0.1900	19.837	0.7810	11.100	0.4370	8.331	0.3280	34.925	1.3750	23	0.051
RAP 3M 4-2	4.826	0.1900	19.837	0.7810	12.700	0.5000	11.125	0.4380	46.025	1.8120	45	0.099
REP 3M 6A	4.826	0.1900	24.612	0.9690	12.700	0.5000	10.337	0.4070	51.587	2.0310	52	0.114
REP 4M6	6.350	0.2500	23.825	0.9380	15.062	0.5930	11.125	0.4380	47.625	1.8750	45	0.099
REP 5M6	7.937	0.3125	31.750	1.2500	22.098	0.8700	16.662	0.6560	61.925	2.4380	108	0.238
REP 5M7	7.937	0.3125	31.750	1.2500	22.098	0.8700	16.662	0.6560	61.925	2.4380	108	0.238
REP 5M10	7.937	0.3125	31.750	1.2500	22.098	0.8700	16.662	0.6560	61.925	2.4380	108	0.238
RAP 10M10	15.875	0.6250	50.800	2.0000	28.575	1.1250	23.825	0.9380	69.850	2.7500	322	0.708

Type	l		d_1 (min.)		W		Z		r		Static Radial Limit Load		G
	±0.762	±0.0310			+0.127	+0.0050	-0.127	-0.0050	+0.380	+0.0150			UNJF-3A
	mm	Inch	mm	Inch	mm	Inch	mm	Inch	mm	Inch	kN	lbs	
REP 3M 3	19.050	0.7500	7.010	0.2760	-	-	-	-	0.127	0.0050	4.45	1000	.1900-32
REP 3M 4-6	25.400	1.0000	7.010	0.2760	1.547	0.0609	5.105	0.2010	0.127	0.0050	4.45	1000	.2500-28
REP 3M 6-2N	19.050	0.7500	7.010	0.2760	2.362	0.0930	7.899	0.3110	0.127	0.0050	4.45	1000	.3750-24
RAP 3M 4-2	23.820	0.9378	7.797	0.3070	1.574	0.0620	5.105	0.2010	0.127	0.0050	4.45	1000	.2500-28
REP 3M 6A	33.350	1.3130	7.594	0.2990	2.352	0.0926	7.899	0.3110	0.127	0.0050	5.34	1200	.3750-24
REP 4M6	28.570	1.1248	8.635	0.3400	2.352	0.0926	7.899	0.3110	0.127	0.0050	7.65	1720	.3750-24
REP 5M6	39.700	1.5630	12.725	0.5010	2.352	0.0926	7.899	0.3110	0.380	0.0150	13.00	2922	.3750-24
REP 5M7	39.700	1.5630	12.725	0.5010	2.352	0.0926	9.389	0.3696	0.380	0.0150	13.00	2922	.3750-24
REP 5M10	39.700	1.5630	12.725	0.5010	3.175	0.1250	13.741	0.5410	0.380	0.0150	13.00	2922	.4375-20
RAP 10M10	38.100	1.5000	22.225	0.8750	3.175	0.1250	13.471	0.5304	0.380	0.0150	31.54	7090	.6250-18

Schematic Drawing

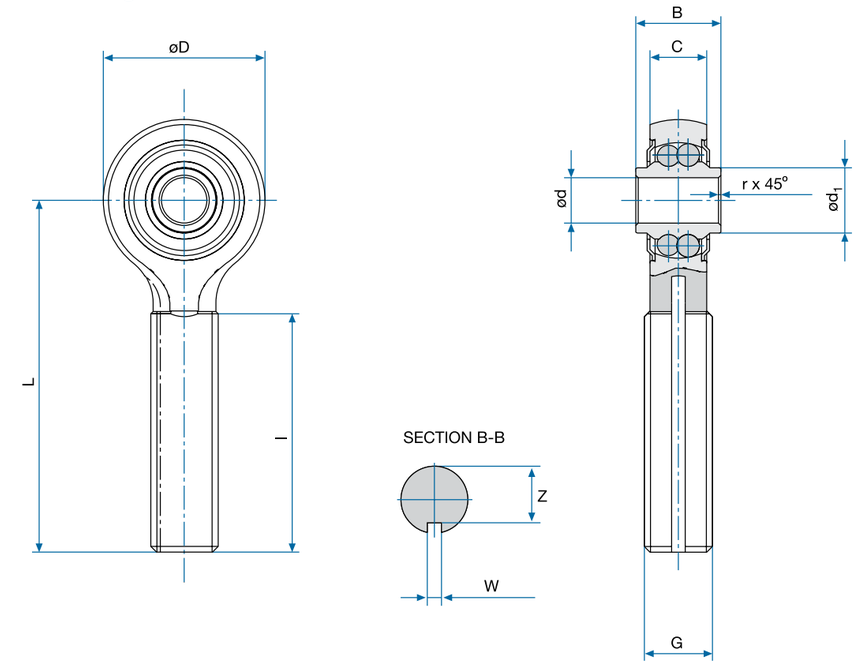

REP / RAP

Designation

REP3M 6
Bearing Number

L
Thread
No Code: Right Hand
L: Left Hand

S..K
Longitudinal Groove
No Code: Without Groove
Code S..K: With Groove

G
Grease Type
G: NATO G 354 / MIL-PRF-23827
No Code: NATO G 395 / MIL-PRF-81322

Part Number Example
REP3M L S 6 K G

Bearing Materials:

Rod End
EN2099 / 1.6657.9 / BS S157; Cadmium Plated

Inner Ring
EN2031 / 1.3505.9 / AISI E52100 Cadmium Plated Except Bore

Sealed Type
Seals (PTFE); Seal Retainers (CRES)

Radial Play (mm)
0.01 max.

Axial Play (mm)
0.075 max.

** Inch dimensions are for reference only. | * Permanently marked in non-functional area.*

Contact

USA: KAMATICS CORPORATION 1330 Blue Hills Avenue Bloomfield, CT 06002 USA | **Tel:** +1 860 243 9704 | **E-mail:** KSB@kaman.com
GERMANY: RWG GERMANY GmbH Medbacher Weg 1 D-91315 Höchstadt a. d. Aisch | **Tel:** +49 (91 93) 50105 100 | **E-mail:** RWG@kaman.com

Rod Ends

REP...F

- Female Thread
- Double Row
- Self-Aligning
- Dimensions According to AS21153

Specifications

Type	d		D		B		C		L		G	Type
	-0.007	-0.0003	±0.254	±0.0100	-0.127	-0.0050	±0.254	±0.0100	±0.250	±0.0098	UNJF-3B	
	mm	Inch	mm	Inch	mm	Inch	mm	Inch	mm	Inch		
REPB 3 N	4.826	0.1900	19.837	0.7810	11.100	0.4370	8.331	0.3280	34.925	1.3750	.2500-28RH	2
REPB 3 N 2	4.826	0.1900	19.837	0.7810	11.100	0.4370	8.331	0.3280	34.925	1.3750	.3125-24RH	1
REP 3 F 4	4.826	0.1900	19.837	0.7810	12.700	0.5000	8.331	0.3280	34.925	1.3750	.2500-28RH	2
REP 3 FL 4	4.826	0.1900	19.837	0.7810	12.700	0.5000	8.331	0.3280	34.925	1.3750	.2500-28LH	2
REP 3 FL 4-3	4.826	0.1900	19.837	0.7810	11.100	0.4370	8.331	0.3280	34.925	1.3750	.2500-28LH	2
REP 4 F 5	6.350	0.2500	23.825	0.9380	15.062	0.5930	11.125	0.4380	37.313	1.4690	.3125-24RH	1
REP 4 F L 5	6.350	0.2500	23.825	0.9380	15.062	0.5930	11.125	0.4380	37.313	1.4690	.3125-24LH	1
REP F 7	6.350	0.2500	23.825	0.9380	15.062	0.5930	11.125	0.4380	47.625	1.8750	.4375-20RH	-
REP 4 F L 7	6.350	0.2500	23.825	0.9380	15.062	0.5930	11.125	0.4380	47.625	1.8750	.4375-20LH	-
REP 5 F 5	7.937	0.3125	31.750	1.2500	22.098	0.8700	16.662	0.6560	47.625	1.8750	.3125-24RH	-
REP 5 F L 5	7.937	0.3125	31.750	1.2500	22.098	0.8700	16.662	0.6560	47.625	1.8750	.3125-24LH	-

Type	R		I		d_1 (min)		U		N		S	
			±0.788	±0.0310			+0.127	+0.0050	+0.127	+0.0050	±0.254	±0.0100
	mm	Inch	mm	Inch	mm	Inch	mm	Inch	mm	Inch	mm	Inch
REPB 3 N	9.906	0.3900	19.050	0.7500	7.010	0.2760	1.570	0.0618	1.420	0.0559	9.525	0.3750
REPB 3 N 2	9.906	0.3900	19.050	0.7500	7.010	0.2760	1.570	0.0618	1.420	0.0559	11.125	0.4380
REP 3 F 4	9.906	0.3900	19.050	0.7500	7.010	0.2760	1.570	0.0618	1.420	0.0559	9.525	0.3750
REP 3 FL 4	9.906	0.3900	19.050	0.7500	7.010	0.2760	1.570	0.0618	1.420	0.0559	9.525	0.3750
REP 3 FL 4-3	9.906	0.3900	19.050	0.7500	7.010	0.2760	1.570	0.0618	1.420	0.0559	9.525	0.3750
REP 4 F 5	11.888	0.4680	19.050	0.7500	8.636	0.3400	1.570	0.0618	1.420	0.0559	11.125	0.4380
REP 4 F L 5	11.888	0.4680	19.050	0.7500	8.636	0.3400	1.570	0.0618	1.420	0.0559	11.125	0.4380
REP F 7	11.888	0.4680	28.575	1.1250	8.636	0.3400	2.360	0.0929	1.750	0.0689	15.875	0.6250
REP 4 F L 7	11.888	0.4680	28.575	1.1250	8.636	0.3400	2.360	0.0929	1.750	0.0689	15.875	0.6250
REP 5 F 5	12.700	0.5000	25.400	1.0000	12.725	0.5010	1.570	0.0618	1.420	0.0559	11.125	0.4380
REP 5 F L 5	12.700	0.5000	25.400	1.0000	12.725	0.5010	1.570	0.0618	1.420	0.0559	11.125	0.4380

Schematic Drawing

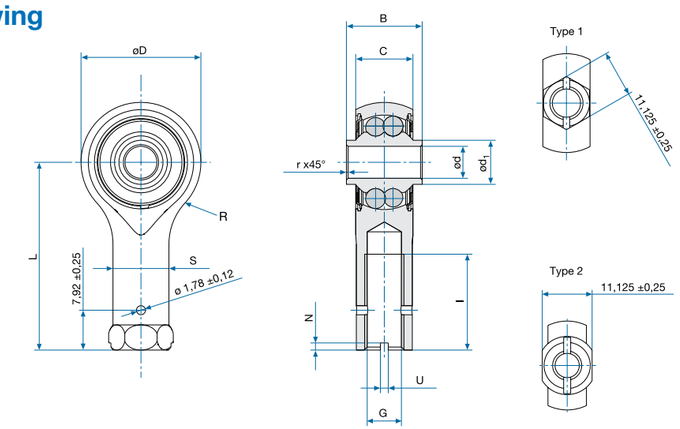

Specifications

REP...F

Type	r		Radial Play (max.)		Axial Play (max.)		Radial Static Limit Load		Radial Static Ultimate Load		Weight	
	+0.380	+0.0150										
	mm	Inch	mm	Inch	mm	Inch	kN	lbs	kN	lbs	g	lbs
REPB 3 N	0.127	0.0050	0.010	0.0004	0.076	0.0030	4.448	1000	6.672	1500	23	0.050
REPB 3 N 2	0.127	0.0050	0.010	0.0004	0.076	0.0030	4.448	1000	6.672	1500	27	0.060
REP 3 F 4	0.127	0.0050	0.010	0.0004	0.076	0.0030	4.448	1000	6.672	1500	27	0.060
REP 3 FL 4	0.127	0.0050	0.010	0.0004	0.076	0.0030	4.448	1000	6.672	1500	27	0.060
REP 3 FL 4-3	0.127	0.0050	0.010	0.0004	0.076	0.0030	4.448	1000	6.672	1500	23	0.050
REP 4 F 5	0.127	0.0050	0.010	0.0004	0.076	0.0030	7.650	1720	11.475	2580	32	0.070
REP 4 F L 5	0.127	0.0050	0.010	0.0004	0.076	0.0030	7.650	1720	11.475	2580	32	0.070
REP F 7	0.127	0.0050	0.010	0.0004	0.076	0.0030	7.650	1720	11.475	2580	36	0.080
REP 4 F L 7	0.127	0.0050	0.010	0.0004	0.076	0.0030	7.650	1720	11.475	2580	36	0.080
REP 5 F 5	0.380	0.0150	0.010	0.0004	0.076	0.0030	12.988	2920	19.460	4375	45	0.100
REP 5 F L 5	0.380	0.0150	0.010	0.0004	0.076	0.0030	12.988	2920	19.460	4375	45	0.100

Designation

REP 4F5
Bearing Number

K
Keyslot
No Code: Without Keyslot
K: With Keyslot

G
Grease Type
G: NATO G 354 / MIL-PRF-23827
No Code: NATO G 395 / MIL-PRF-81322

Part Number Example
REP 4F5 K G

Bearing Materials:

Rod End
EN2099 / 1.6657.9 / BS S157;
Cadmium Plated

Inner Ring
EN2031 / 1.3505.9 / AISI E52100
Cadmium Plated Except Bore

Sealed Type
Seals (PTFE); Seal Retainers (CRES)

** Inch dimensions are for reference only. | * Permanently marked in non-functional area.*

Contact

USA: KAMATICS CORPORATION 1330 Blue Hills Avenue Bloomfield, CT 06002 USA | **Tel:** +1 860 243 9704 | **E-mail:** KSB@kaman.com
GERMANY: RWG GERMANY GmbH Medbacher Weg 1 D-91315 Höchstadt a. d. Aisch | **Tel:** +49 (91 93) 50105 100 | **E-mail:** RWG@kaman.com

Rod Ends

EN6055

- Male Thread
- Metal to Metal Bearing
- CRES

Specifications

Diameter Code	d		D		B		C		d_1 (min.)		H	
	-0.013	-0.0005	±0.254	±0.0100	-0.050	-0.0020	±0.127	±0.0050			±0.254	±0.0100
	mm	Inch	mm	Inch	mm	Inch	mm	Inch	mm	Inch	mm	Inch
03	4.826	0.1900	20.500	0.8071	11.100	0.4370	8.560	0.3370	7.620	0.3000	40.490	1.5941
04	6.350	0.2500	20.500	0.8071	11.100	0.4370	8.560	0.3370	7.620	0.3000	40.490	1.5941
041	6.350	0.2500	20.500	0.8071	11.100	0.4370	8.560	0.3370	7.620	0.3000	52.090	2.0508
05	7.937	0.3125	22.900	0.9016	11.100	0.4370	8.310	0.3272	9.140	0.3598	47.630	1.8752
06	9.525	0.3750	26.000	1.0236	12.700	0.5000	10.570	0.4161	11.840	0.4661	50.810	2.0004
07	11.113	0.4375	29.200	1.1496	14.275	0.5620	11.480	0.4520	13.640	0.5370	56.360	2.2189
071	11.113	0.4375	29.200	1.1496	14.275	0.5620	11.480	0.4520	13.640	0.5370	66.200	2.6063
8	12.700	0.5000	34.000	1.3386	15.875	0.6250	13.080	0.5150	15.420	0.6071	62.760	2.4709
10	15.875	0.6250	38.700	1.5236	19.050	0.7500	14.660	0.5772	18.970	0.7469	68.280	2.6882
12	19.050	0.7500	45.100	1.7756	22.225	0.8750	16.260	0.6402	21.460	0.8449	74.630	2.9382
14	22.225	0.8750	51.400	2.0236	22.225	0.8750	19.430	0.7650	25.270	0.9949	85.730	3.3752
16	25.400	1.0000	70.500	2.7756	34.925	1.3750	25.780	1.0150	32.230	1.2689	104.780	4.1252

Diameter Code	Z		W		R		I		G	ß (min.)
	-0.127	-0.0050	+0.127	+0.0050			+1.52 -0.76	+0.060 -0.030	UNJF-3A	
	mm	Inch	mm	Inch	mm	Inch	mm	Inch		
03	6.604	0.2600	1.575	0.0620	6.477	0.2550	25.400	1.0000	.3125-24	16.0°
04	6.604	0.2600	1.575	0.0620	6.477	0.2550	25.400	1.0000	.3125-24	16.0°
041	6.604	0.2600	1.575	0.0620	6.477	0.2550	37.000	1.4567	.3125-24	16.0°
05	6.604	0.2600	1.575	0.0620	6.477	0.2550	26.975	1.0620	.3125-24	15.5°
06	7.899	0.3110	2.362	0.0930	6.477	0.2550	31.750	1.2500	.3750-24	9.5°
07	9.398	0.3700	2.362	0.0930	6.477	0.2550	34.925	1.3750	.4375-20	11.0°
071	9.398	0.3700	2.362	0.0930	6.477	0.2550	34.925	1.3750	.4375-20	11.0°
8	11.074	0.4360	2.362	0.0930	6.477	0.2550	38.100	1.5000	.5000-20	9.5°
10	13.741	0.5410	3.175	0.1250	6.477	0.2550	41.275	1.6250	.6250-18	12.0°
12	16.840	0.6630	3.175	0.1250	6.477	0.2550	44.450	1.7500	.7500-16	14.0°
14	19.736	0.7770	3.962	0.1560	8.077	0.3180	47.625	1.8750	.8750-14	6.0°
16	28.854	1.1360	4.750	0.1870	9.703	0.3820	53.975	2.1250	1.2500-12	14.5°

Schematic Drawing

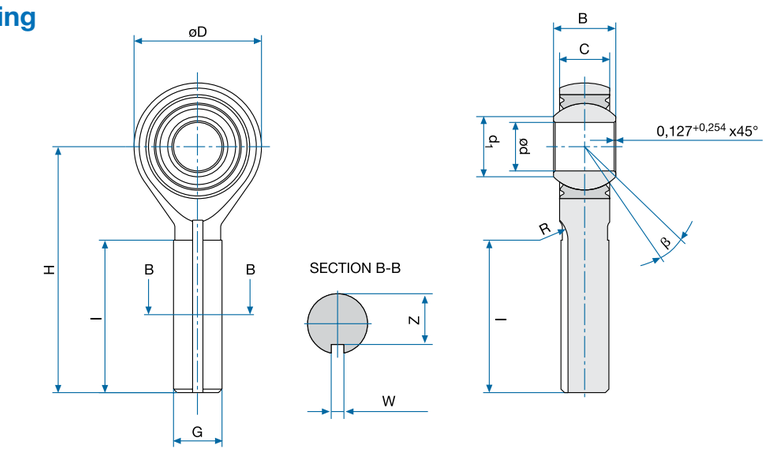

Specifications

EN6055

Diameter Code	Radial Play Normal / Code N		Radial Play Reduced / Code P		Axial Play Normal / Code N		Axial Play Reduced / Code P	
	mm	Inch	mm	Inch	mm	Inch	mm	Inch
03	0.010 to 0.030	0.0004 to 0.0012	0.002 to 0.010	0.0001 to 0.0004	0.120 max	0.0047 max.	0.035 max.	0.0014 max.
04	0.010 to 0.030	0.0004 to 0.0012	0.002 to 0.010	0.0001 to 0.0004	0.120 max	0.0047 max.	0.035 max.	0.0014 max.
041	0.010 to 0.030	0.0004 to 0.0012	0.002 to 0.010	0.0001 to 0.0004	0.120 max	0.0047 max.	0.035 max.	0.0014 max.
05	0.010 to 0.030	0.0004 to 0.0012	0.002 to 0.010	0.0001 to 0.0004	0.120 max	0.0047 max.	0.035 max.	0.0014 max.
06	0.010 to 0.030	0.0004 to 0.0012	0.002 to 0.010	0.0001 to 0.0004	0.120 max	0.0047 max.	0.035 max.	0.0014 max.
07	0.010 to 0.030	0.0004 to 0.0012	0.002 to 0.010	0.0001 to 0.0004	0.120 max	0.0047 max.	0.035 max.	0.0014 max.
071	0.010 to 0.030	0.0004 to 0.0012	0.002 to 0.010	0.0001 to 0.0004	0.120 max	0.0047 max.	0.035 max.	0.0014 max.
8	0.010 to 0.050	0.0004 to 0.0020	0.002 to 0.010	0.0001 to 0.0004	0.229 max.	0.0090 max.	0.035 max.	0.0014 max.
10	0.010 to 0.050	0.0004 to 0.0020	0.003 to 0.012	0.0001 to 0.0005	0.229 max.	0.0090 max.	0.040 max.	0.0016 max.
12	0.010 to 0.050	0.0004 to 0.0020	0.004 to 0.015	0.0002 to 0.0006	0.229 max.	0.0090 max.	0.050 max.	0.0020 max.
14	0.010 to 0.050	0.0004 to 0.0020	0.004 to 0.015	0.0002 to 0.0006	0.229 max.	0.0090 max.	0.050 max.	0.0020 max.
16	0.010 to 0.050	0.0004 to 0.0020	0.004 to 0.015	0.0002 to 0.0006	0.229 max.	0.0090 max.	0.050 max.	0.0020 max.

Diameter Code	Radial Static Limit Load		Axial Static Limit Load		Radial Static Ultimate Load		Fatigue Load		Weight	
	kN	lbs	kN	lbs	kN	lbs	kN	lbs	g	lbs
03	10.7	2405	4.7	1060	16.1	3620	3.3	750	33	0.073
04	20.4	4580	4.7	1060	30.6	6880	3.3	750	33	0.073
041	20.0	4500	4.7	1060	30.0	6745	3.3	750	36	0.079
05	20.6	4625	5.2	1170	30.9	6950	3.6	810	39	0.086
06	28.8	6475	7.6	1710	43.2	9710	4.8	1080	62	0.136
07	36.8	8275	8.4	1890	55.3	12440	6.1	1375	83	0.183
071	31.3	7040	8.4	1890	46.9	10550	5.2	1175	90	0.198
8	58.4	13130	9.3	2100	87.6	19700	9.9	2225	126	0.277
10	66.6	14975	11.1	2500	99.9	22460	11.0	2475	192	0.422
12	88.3	19850	14.4	3240	132.5	29790	14.5	3260	290	0.638
14	102.4	23020	17.0	3830	153.6	34530	16.9	3800	437	0.961
16	154.9	34825	22.2	5000	232.4	52250	25.5	5740	1140	2.508

EN6055 continued on pg 206. ►

EN6055

Designation

EN6055
Number of Standard

R
Thread
R: Right Hand
L: Left Hand

04
Diameter Code

N
Radial Play
N: Normal
R: Reduced

T
Surface Treatment
T: Passivated
P: Cadmium Plated

A
Grease Type
A: NATO G 354 / MIL-PRF-23827
B: NATO G 395 / MIL-PRF-81322

K
Longitudinal Groove
F: Without Groove
K: With Groove

Part Number Example
EN6055 R 04 N T A K

Bearing Materials:

Rod End
EN2539 / 17-4PH H1025 / 1.4548.4

Outer Ring
EN2539 / 17-4PH H1150 / 1.4548

Inner Ring
EN2030 / AISI 440C / 1.3544.9

Technical Specification
EN6099

** Inch dimensions are for reference only. | * Permanently marked in non-functional area.*

Contact

USA: KAMATICS CORPORATION 1330 Blue Hills Avenue Bloomfield, CT 06002 USA | **Tel:** +1 860 243 9704 | **E-mail:** KSB@kaman.com
GERMANY: RWG GERMANY GmbH Medbacher Weg 1 D-91315 Höchstadt a. d. Aisch | **Tel:** +49 (91 93) 50105 100 | **E-mail:** RWG@kaman.com

Rod Ends

EN6056

- Male Thread
- Self-Lubricating
- CRES

Specifications

Diameter Code	d		C		D		B		d_1 (min.)		H		G	ß (min.)
	-0.013	-0.0005	+0.254	+0.0100	±0.254	±0.0100	-0.050	-0.0020			±0.254	±0.0100	UNJF-3A	
	mm	Inch	mm	Inch	mm	Inch	mm	Inch	mm	Inch	mm	Inch		
03	4.826	0.1900	8.560	0.3370	20.500	0.8071	11.100	0.4370	7.620	0.3000	39.680	1.5622	.3125-24	15°
04	6.350	0.2500	8.560	0.3370	20.500	0.8071	11.100	0.4370	7.620	0.3000	39.680	1.5622	.3125-24	15°
041	6.350	0.2500	8.560	0.3370	20.500	0.8071	11.100	0.4370	7.620	0.3000	62.030	2.4421	.3125-24	15°
05	7.937	0.3125	8.310	0.3272	22.900	0.9016	11.100	0.4370	9.140	0.3598	47.630	1.8752	.3125-24	14°
051	7.937	0.3125	8.310	0.3272	22.900	0.9016	11.100	0.4370	9.140	0.3598	57.660	2.2701	.3125-24	14°
052	7.937	0.3125	8.310	0.3272	22.900	0.9016	11.100	0.4370	9.140	0.3598	57.660	2.2701	.4375-20	14°
06	9.525	0.3750	10.570	0.4161	26.000	1.0236	12.700	0.5000	11.840	0.4661	49.230	1.9382	.3750-24	8°
061	9.525	0.3750	10.570	0.4161	26.000	1.0236	12.700	0.5000	11.840	0.4661	61.520	2.4220	.3750-24	8°
07	11.113	0.4375	11.480	0.4520	29.200	1.1496	14.270	0.5618	13.640	0.5370	53.980	2.1252	.4375-20	10°
08	12.700	0.5000	13.080	0.5150	34.000	1.3386	15.880	0.6252	15.420	0.6071	61.930	2.4382	.5000-20	9°
081	12.700	0.5000	13.080	0.5150	34.000	1.3386	15.880	0.6252	15.420	0.6071	79.860	3.1441	.5000-20	9°
10	15.875	0.6250	14.660	0.5772	38.700	1.5236	19.050	0.7500	18.970	0.7469	66.680	2.6252	.6250-18	12°
101	15.875	0.6250	14.660	0.5772	38.700	1.5236	19.050	0.7500	18.970	0.7469	81.030	3.1902	.6250-18	12°
12	19.050	0.7500	16.260	0.6402	45.100	1.7756	22.230	0.8752	21.460	0.8449	73.030	2.8752	.7500-16	13°
14	22.225	0.8750	19.430	0.7650	51.400	2.0236	22.230	0.8752	25.270	0.9949	85.730	3.3752	.8750-14	6°
16	25.400	1.0000	25.780	1.0150	70.500	2.7756	34.930	1.3752	32.230	1.2689	104.780	4.1252	1.2500-12	12°

Diameter Code	Z		W		I		R		Starting Torque Normal / Code N		Starting Torque Reduced / Code R	
	-0.127	-0.0050	+0.127	+0.0050	+1.52 -0.76	+0.060 -0.030						
	mm	Inch	mm	Inch	mm	Inch	mm	Inch	Nm	In.-lbs	Nm	In.-lbs
03	6.604	0.2600	1.575	0.0620	25.400	1.0000	6.477	0.2550	0.060 to 0.560	0.5310 to 4.9564	0.000 to 0.110	0.0000 to 0.9736
04	6.604	0.2600	1.575	0.0620	25.400	1.0000	6.477	0.2550	0.110 to 0.560	0.9736 to 4.9564	0.000 to 0.110	0.0000 to 0.9736
041	6.604	0.2600	1.575	0.0620	45.400	1.7874	6.477	0.2550	0.110 to 0.560	0.9736 to 4.9564	0.000 to 0.110	0.0000 to 0.9736
05	6.604	0.2600	1.575	0.0620	26.980	1.0622	6.477	0.2550	0.110 to 0.560	0.9736 to 4.9564	0.000 to 0.110	0.0000 to 0.9736
051	6.604	0.2600	1.575	0.0620	37.000	1.4567	6.477	0.2550	0.110 to 0.560	0.9736 to 4.9564	0.000 to 0.110	0.0000 to 0.9736
052	9.398	0.3700	2.362	0.0930	37.000	1.4567	6.477	0.2550	0.110 to 0.560	0.9736 to 4.9564	0.000 to 0.110	0.0000 to 0.9736
06	7.899	0.3110	2.362	0.0930	31.750	1.2500	6.477	0.2550	0.110 to 0.560	0.9736 to 4.9564	0.000 to 0.110	0.0000 to 0.9736
061	7.899	0.3110	2.362	0.0930	42.000	1.6535	6.477	0.2550	0.110 to 0.560	0.9736 to 4.9564	0.000 to 0.110	0.0000 to 0.9736
07	9.398	0.3700	2.362	0.0930	24.930	0.9815	6.477	0.2550	0.110 to 0.560	0.9736 to 4.9564	0.030 to 0.150	0.2655 to 1.3276
08	11.074	0.4360	2.362	0.0930	38.100	1.5000	6.477	0.2550	0.110 to 0.560	0.9736 to 4.9564	0.030 to 0.150	0.2655 to 1.3276
081	11.074	0.4360	2.362	0.0930	54.000	2.1260	6.477	0.2550	0.110 to 0.560	0.9736 to 4.9564	0.030 to 0.150	0.2655 to 1.3276
10	13.741	0.5410	3.175	0.1250	41.280	1.6252	6.477	0.2550	0.110 to 0.560	0.9736 to 4.9564	0.030 to 0.150	0.2655 to 1.3276
101	13.741	0.5410	3.175	0.1250	53.600	2.1102	6.477	0.2550	0.110 to 0.560	0.9736 to 4.9564	0.030 to 0.150	0.2655 to 1.3276
12	16.840	0.6630	3.175	0.1250	44.450	1.7500	6.477	0.2550	0.110 to 0.560	0.9736 to 4.9564	0.030 to 0.150	0.2655 to 1.3276
14	19.735	0.7770	3.962	0.1560	47.630	1.8752	8.077	0.3180	0.230 to 0.900	2.0357 to 7.9660	0.040 to 0.250	0.3540 to 2.2127
16	28.854	1.1360	4.750	0.1870	53.980	2.1252	9.703	0.3820	0.230 to 0.900	2.0357 to 7.9660	0.040 to 0.250	0.3540 to 2.2127

Schematic Drawing

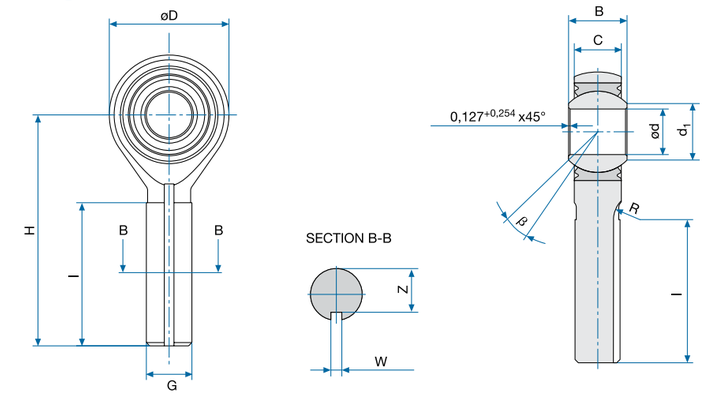

Specifications

EN6056

Diameter Code	Radial Static Limit Load		Axial Static Limit Load		Radial Static Ultimate Load		Radial Dynamic Limit Load		Fatigue Load		Weight	
	kN	lbs	kN	lbs	kN	lbs	kN	lbs	kN	lbs	g	lbs
03	10.7	2405	4.7	1057	16.1	3619	10.7	2405	3.3	750	33	0.073
04	20.0	4496	4.7	1057	30.0	6744	20.0	4496	3.3	750	33	0.073
041	20.0	4496	4.7	1057	30.0	6744	20.0	4496	3.3	750	41	0.090
05	20.0	4496	5.2	1169	30.0	6744	20.0	4496	3.3	750	39	0.086
051	20.0	4496	5.2	1169	30.0	6744	20.0	4496	3.3	750	43	0.095
052	24.4	5485	5.2	1169	36.6	8228	22.3	5013	4.0	899	59	0.130
06	28.8	6474	7.6	1708	43.6	9801	28.8	6474	4.8	1080	62	0.136
061	28.8	6474	7.6	1708	43.6	9801	28.8	6474	4.8	1080	68	0.150
07	36.8	8273	8.4	1888	55.3	12431	36.8	8273	6.1	1375	83	0.183
08	57.2	12859	9.3	2091	85.8	19288	57.2	12859	9.4	2115	126	0.277
081	57.2	12859	9.3	2091	85.8	19288	57.2	12859	9.4	2115	141	0.310
10	66.6	14972	11.1	2495	99.9	22458	66.6	14972	11.0	2475	192	0.422
101	66.6	14972	11.1	2495	99.9	22458	66.6	14972	11.0	2475	212	0.466
12	88.2	19827	14.4	3237	132.2	29719	88.2	19827	14.5	3260	290	0.638
14	102.4	23020	17.0	3822	153.6	34529	102.4	23020	17.0	3825	437	0.961
16	230.9	51906	22.2	4991	346.9	77983	230.9	51906	38.1	8565	1140	2.508

Designation

EN6056
Number of Standard / Bearing Number

R
Thread
R: Right Hand
L: Left Hand

04
Diameter Code

N
Starting Torque
N: Normal
R: Reduced

T
Surface Treatment
T: Passivated
P: Cadmium Plated

K
Longitudinal Groove
F: Without Groove
K: With Groove

Part Number Example
EN6056 R 04 N T K

Bearing Materials:

Rod End
EN2539 / 17-4PH H1025 / 1.4548.4
Outer Ring
EN2539 / 17-4PH H1150 / 1.4548
Inner Ring
EN2030 / AISI 440C / 1.3544.9
Liner
per EN2755 / SAE AS81820
Technical Specification
EN2068

** Inch dimensions are for reference only. | * Permanently marked in non-functional area.*

Contact

USA: KAMATICS CORPORATION 1330 Blue Hills Avenue Bloomfield, CT 06002 USA | **Tel:** +1 860 243 9704 | **E-mail:** KSB@kaman.com
GERMANY: RWG GERMANY GmbH Medbacher Weg 1 D-91315 Höchstadt a. d. Aisch | **Tel:** +49 (91 93) 50105 100 | **E-mail:** RWG@kaman.com

Rod Ends

FMW3E_.4 / NSA8143

- Male Thread
- Self-Lubricating
- CRES

Specifications

Diameter Code	d		D		B		C		d_1 (min.)		G
	-0.0127	-0.0005	±0.254	±0.0100	-0.127	-0.0050	±0.127	±0.0050			UNJF-3A
	mm	Inch	mm	Inch	mm	Inch	mm	Inch	mm	Inch	
03	4.826	0.1900	20.472	0.8060	11.100	0.4370	8.560	0.3370	7.620	0.3000	.3125-24
04	6.350	0.2500	20.472	0.8060	11.100	0.4370	8.560	0.3370	7.620	0.3000	.3125-24
05	7.937	0.3125	22.860	0.9000	11.100	0.4370	8.306	0.3270	9.140	0.3598	.3125-24
06	9.525	0.3750	26.035	1.0250	12.700	0.5000	10.566	0.4160	11.940	0.4701	.3750-24
07	11.112	0.4375	29.210	1.1500	14.275	0.5620	11.481	0.4520	13.720	0.5402	.4375-20
08	12.700	0.5000	33.960	1.3370	15.875	0.6250	13.081	0.5150	15.490	0.6098	.5000-20
10	15.875	0.6250	38.735	1.5250	19.050	0.7500	14.656	0.5770	19.050	0.7500	.6250-18
12	19.050	0.7500	45.085	1.7750	22.225	0.8750	16.256	0.6400	21.590	0.8500	.7500-16
14	22.225	0.8750	51.435	2.0250	22.225	0.8750	19.431	0.7650	25.400	1.0000	.8750-14
16	25.400	1.0000	70.485	2.7750	34.925	1.3750	25.781	1.0150	32.260	1.2701	1.2500-12

Designation

NSA8143
Number of Series

04
Diameter Code

X
Starting Torque
X: Reduced
None: Normal

R
Thread
R: Right Hand
L: Left Hand

F
Longitudinal Groove
F: Without Groove
K: With Groove

P
Surface Treatment
No Code: None
P: Rod End Cadmium Plated

Part Number Example
NSA8143 -04 X R F P

FMW3E
Number of Series

4.4
Diameter Code

X
Starting Torque
X: Reduced
None: Normal

R
Thread
R: Right Hand
L: Left Hand

K
Longitudinal Groove
F: Without Groove
K: With Groove

Part Number Example
FMW3E 4.4 X R K

Bearing Materials:

Rod End
EN2539 / 17-4PH H1025 / 1.4548.4

Outer Ring
EN2539 / 17-4PH H1150 / 1.4548.4

Inner Ring
EN2030 / AISI 440C / 1.3544.9

Liner
per SAE AS81820 / EN2755

Technical Specification
SAE AS81935

** Inch dimensions are for reference only. | * Permanently marked in non-functional area.*

Schematic Drawing

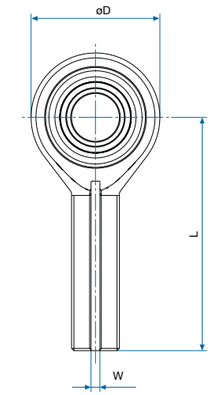

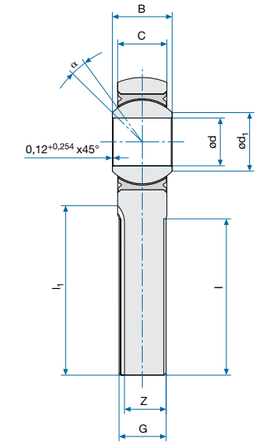

Specifications

FMW3E_.4 / NSA8143

Diameter Code	L		l		W		Z		l_1		α
	±0.254	±0.0100	+1.520 -0.760	+0.060 -0.030	+0.127	+0.0050	-0.127	-0.0050	+1.520 -0.760	+0.060 -0.030	
	mm	Inch	mm	Inch	mm	Inch	mm	Inch	mm	Inch	
03	39.675	1.5620	25.400	1.5620	1.570	0.0618	6.600	0.2598	28.500	1.1220	15°
04	39.675	1.5620	25.400	1.5620	1.570	0.0618	6.600	0.2598	28.500	1.1220	15°
05	47.625	1.8750	26.975	1.8750	1.570	0.0618	6.600	0.2598	30.800	1.2126	14°
06	49.225	1.9380	31.750	1.9380	2.360	0.0929	7.900	0.3110	34.300	1.3504	8°
07	53.975	2.1250	34.925	2.1250	2.360	0.0929	9.400	0.3701	39.300	1.5472	10°
08	61.925	2.4380	38.100	2.4380	2.360	0.0929	11.070	0.4358	42.400	1.6693	9°
10	66.675	2.6250	41.275	2.6250	3.175	0.1250	13.740	0.5409	46.000	1.8110	12°
12	73.025	2.8750	44.450	2.8750	3.175	0.1250	16.840	0.6630	49.350	1.9429	13°
14	85.725	3.3750	47.625	3.3750	3.960	0.1559	19.740	0.7772	53.400	2.1024	6°
16	104.775	4.1250	53.975	4.1250	4.750	0.1870	28.850	1.1358	61.000	2.4016	12°

Diameter Code	Starting Torque				Static Limit Load		Weight	
	No Code		Code X					
	Nm	In.-lbs	Nm	In.-lbs	kN	lbs	g	lbs
03	0.056 to 0.678	0.4956 to 6.0008	0.030 to 0.060	0.2655 to 0.5310	10.5	2360	27	0.060
04	0.056 to 0.678	0.4956 to 6.0008	0.030 to 0.060	0.2655 to 0.5310	21.6	4860	31	0.068
05	0.113 to 1.130	1.0001 to 10.0014	0.030 to 0.060	0.2655 to 0.5310	31.9	7180	50	0.110
06	0.113 to 1.130	1.0001 to 10.0014	0.030 to 0.060	0.2655 to 0.5310	38.0	8549	63	0.139
07	0.113 to 1.130	1.0001 to 10.0014	0.060 to 0.120	0.5310 to 1.0619	53.4	12000	113	0.249
08	0.113 to 1.130	1.0001 to 10.0014	0.060 to 0.120	0.5310 to 1.0619	86.7	19499	128	0.282
10	0.113 to 1.130	1.0001 to 10.0014	0.060 to 0.120	0.5310 to 1.0619	97.4	21900	167	0.367
12	0.113 to 1.130	1.0001 to 10.0014	0.060 to 0.120	0.5310 to 1.0619	130.3	29298	263	0.579
14	0.226 to 1.808	2.0003 to 16.0022	0.110 to 0.220	0.9735 to 1.9469	153.5	34498	358	0.788
16	0.226 to 1.808	2.0003 to 16.0022	0.110 to 0.220	0.9735 to 1.9469	357.2	80296	1043	2.295

Contact

USA: KAMATICS CORPORATION 1330 Blue Hills Avenue Bloomfield, CT 06002 USA | **Tel:** +1 860 243 9704 | **E-mail:** KSB@kaman.com
GERMANY: RWG GERMANY GmbH Medbacher Weg 1 D-91315 Höchstadt a. d. Aisch | **Tel:** +49 (91 93) 50105 100 | **E-mail:** RWG@kaman.com

Rod Ends

FMW3F_.4 / NSA8149

- Female Thread
- Self-Lubricating
- CRES

Specifications

Diameter Code	d		D		B		C		d_1 (min.)		L	
	-0.0127	-0.0005	+0.889 -0.254	+0.0350 -0.0100	-0.127	-0.0050	±0.127	±0.0050			±0.254	±0.0100
	mm	Inch	mm	Inch	mm	Inch	mm	Inch	mm	Inch	mm	Inch
03	4.826	0.1900	20.472	0.8060	11.100	0.4370	8.560	0.3370	7.645	0.3010	34.925	1.3750
04	6.350	0.2500	20.472	0.8060	11.100	0.4370	8.560	0.3370	7.645	0.3010	37.312	1.4690
05	7.937	0.3125	22.860	0.9000	11.100	0.4370	8.306	0.3270	10.185	0.4010	34.925	1.3750
06	9.525	0.3750	26.035	1.0250	12.700	0.5000	10.566	0.4160	11.963	0.4710	41.275	1.6250
07	11.112	0.4375	29.210	1.1500	14.275	0.5620	11.481	0.4520	13.767	0.5420	46.024	1.8120
08	12.700	0.5000	33.960	1.3370	15.875	0.6250	13.081	0.5150	15.545	0.6120	53.975	2.1250
10	15.875	0.6250	38.735	1.5250	19.050	0.7500	14.656	0.5770	19.100	0.7520	66.675	2.6250
12	19.050	0.7500	45.085	1.7750	22.225	0.8750	16.256	0.6400	22.675	0.8927	73.025	2.8750
14	22.225	0.8750	51.435	2.0250	22.225	0.8750	19.431	0.7650	26.987	1.0625	85.725	3.3750
16	25.400	1.0000	70.485	2.7750	34.925	1.3750	25.781	1.0150	32.385	1.2750	104.775	4.1250
20	31.750	1.2500	73.660	2.9000	38.100	1.5000	28.956	1.1400	37.075	1.4596	127.000	5.0000

Designation

NSA8143
Number of Series

04
Diameter Code

L
Thread
R: Right Hand
L: Left Hand

Part Number Example
NSA8143 -04 L

FMW3F
Number of Series

5.4
Diameter Code

L
Thread
R: Right Hand
L: Left Hand

Part Number Example
FMW3F 5.4 L

Bearing Materials:

Rod End
EN2539 / 17-4PH H1025 / 1.4548.4;
Cadmium Plated

Outer Ring
EN2539 / 17-4PH H1150 / 1.4548

Inner Ring
EN2030 / AISI 440C / 1.3544.9

Liner
EN2030 / AISI 440C / 1.3544.9

Technical Specification
per SAE AS81820 / EN2755

** Inch dimensions are for reference only. | * Permanently marked in non-functional area.*

Schematic Drawing

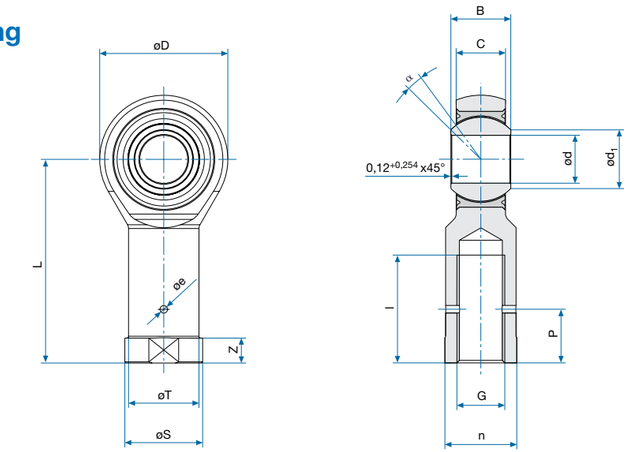

Specifications

FMW3F_.4 / NSA8149

Diameter Code	l		n		S		P		T	
	+1.524 -0.762	+0.060 -0.030	±0.254	±0.0100	±0.254	±0.0100	±0.381	±0.0150	±0.381	±0.0150
	mm	Inch	mm	Inch	mm	Inch	mm	Inch	mm	Inch
03	19.050	0.7500	11.100	0.4370	12.700	0.5000	9.652	0.3800	10.719	0.4220
04	19.050	0.7500	11.100	0.4370	12.700	0.5000	9.652	0.3800	10.719	0.4220
05	19.050	0.7500	11.100	0.4370	12.700	0.5000	9.652	0.3800	10.719	0.4220
06	23.799	0.9370	14.783	0.5820	15.875	0.6250	11.176	0.4400	14.402	0.5670
07	26.975	1.0620	15.875	0.6250	17.449	0.6870	12.700	0.5000	15.494	0.6100
08	28.575	1.1250	19.050	0.7500	20.624	0.8120	14.224	0.5600	18.669	0.7350
10	38.100	1.5000	22.225	0.8750	25.400	1.0000	17.526	0.6900	21.844	0.8600
12	41.148	1.6200	25.400	1.0000	26.924	1.0600	20.828	0.8200	25.019	0.9850
14	47.625	1.8750	28.575	1.1250	30.150	1.1870	23.875	0.9400	28.194	1.1100
16	53.975	2.1250	31.750	1.2500	33.325	1.3120	27.178	1.0700	31.369	1.2350
20	79.975	3.1486	42.900	1.6890	44.450	1.7500	33.528	1.3200	42.494	1.6730

Diameter Code	e		Z		Weight		G	α
	±0.100	±0.0039	±0.254	±0.0100			UNF-3B	
	mm	Inch	mm	Inch	g	lbs		
03	2.000	0.0787	6.350	0.2500	27	0.059	.3125-24	16°
04	2.000	0.0787	6.350	0.2500	27	0.059	.3125-24	16°
05	2.000	0.0787	6.350	0.2500	31	0.068	.3125-24	15°
06	2.000	0.0787	6.350	0.2500	49	0.108	.3750-24	9°
07	2.000	0.0787	6.350	0.2500	81	0.178	.4375-20	11°
08	2.000	0.0787	6.350	0.2500	127	0.279	.5000-20	9°
10	2.000	0.0787	6.350	0.2500	190	0.418	.6250-18	12°
12	2.000	0.0787	6.350	0.2500	231	0.508	.7500-16	13°
14	2.000	0.0787	6.350	0.2500	426	0.937	.8750-14	6°
16	2.000	0.0787	6.350	0.2500	612	1.346	1.0000-12	12°
20	2.000	0.0787	6.350	0.2500	1406	3.093	1.2500-12	13°

Contact

USA: KAMATICS CORPORATION 1330 Blue Hills Avenue Bloomfield, CT 06002 USA | **Tel:** +1 860 243 9704 | **E-mail:** KSB@kaman.com
GERMANY: RWG GERMANY GmbH Medbacher Weg 1 D-91315 Höchstadt a. d. Aisch | **Tel:** +49 (91 93) 50105 100 | **E-mail:** RWG@kaman.com

Rod Ends

REM

- Male Thread
- Self-Lubricating
- Dimensions According to SAE AS81935 / 1

Specifications

Type	d		D		B		C		d_1 (min.)		G
	-0.0127	-0.0005	±0.254	±0.0100	-0.051	-0.0020	±0.127	±0.0050			UNJF-3A
	mm	Inch	mm	Inch	mm	Inch	mm	Inch	mm	Inch	
REM6W10M	4.826	0.1900	20.472	0.8060	11.100	0.4370	8.559	0.3370	7.660	0.3016	.3125-24
REM8W10M	6.350	0.2500	20.472	0.8060	11.100	0.4370	8.559	0.3370	7.660	0.3016	.3125-24
REM10W10M	7.938	0.3125	22.860	0.9000	11.100	0.4370	8.305	0.3270	9.100	0.3583	.3125-24
REM12W10M	9.525	0.3750	26.035	1.0250	12.700	0.5000	10.566	0.4160	11.967	0.4711	.3750-24
REM14W10M	11.112	0.4375	29.210	1.1500	14.275	0.5620	11.480	0.4520	13.774	0.5423	.4375-20
REM16W10M	12.700	0.5000	33.959	1.3370	15.875	0.6250	13.081	0.5150	15.554	0.6124	.5000-20
REM20W10M	15.875	0.6250	38.735	1.5250	19.050	0.7500	14.655	0.5770	19.098	0.7519	.6250-18
REM24W10M	19.050	0.7500	45.085	1.7750	22.225	0.8750	16.256	0.6400	21.600	0.8504	.7500-16
REM28W10M	22.225	0.8750	51.435	2.0250	22.225	0.8750	19.431	0.7650	25.400	1.0000	.8750-14
REM32W10M	25.400	1.0000	70.485	2.7750	34.925	1.3750	25.781	1.0150	32.378	1.2747	1.2500-12

Designation

REM
Number of Series

S
Longitudinal Groove
No Code: Without Groove
S: With Groove

L
Thread
No Code: Right Hand
L: Left Hand

8 W 10 M
Diameter Code

X
Starting Torque
No Code: Normal
X: Reduced

Part Number Example
REM S L 8W10M X

Bearing Materials:

Rod End
MIL-S-5000; Cadmium Plated

Outer Ring
EN2539 / 1.4548 / 17-4 PH H1150

Inner Ring
EN2030 / 1.3544.9 / AISI 440C

Liner
per SAE AS81820 / EN2755

Technical Specification
SAE AS81935

** Inch dimensions are for reference only. | * Permanently marked in non-functional area.*

Schematic Drawing

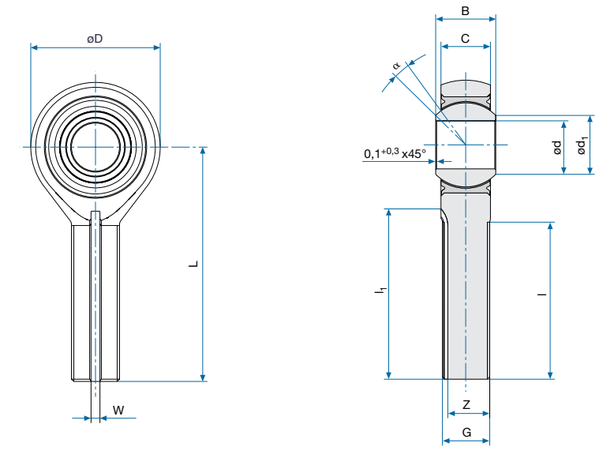

Specifications

REM

Type	L		l		l_1		W		Z		α (min.)
	±0.254	±0.0100	±0.787	±0.0310	-0.508	-0.0200	+0.127	+0.0050	-0.127	-0.0050	
	mm	Inch	mm	Inch	mm	Inch	mm	Inch	mm	Inch	
REM6W10M	39.675	1.5620	24.587	0.9680	24.892	0.9800	1.575	0.0620	6.807	0.2680	15°
REM8W10M	39.675	1.5620	24.587	0.9680	24.892	0.9800	1.575	0.0620	6.807	0.2680	15°
REM10W10M	47.625	1.8750	30.149	1.1870	32.258	1.2700	1.575	0.0620	6.807	0.2680	14°
REM12W10M	49.225	1.9380	30.149	1.1870	31.369	1.2350	2.362	0.0930	8.103	0.3190	8°
REM14W10M	53.975	2.1250	32.537	1.2810	35.610	1.4020	2.362	0.0930	9.728	0.3830	10°
REM16W10M	61.925	2.4380	37.287	1.4680	40.360	1.5890	2.362	0.0930	11.303	0.4450	9°
REM20W10M	66.675	2.6250	39.675	1.5620	42.748	1.6830	3.175	0.1250	13.741	0.5410	12°
REM24W10M	73.025	2.8750	42.849	1.6870	45.923	1.8080	3.175	0.1250	16.840	0.6630	13°
REM28W10M	85.725	3.3750	50.800	2.0000	53.873	2.1210	3.962	0.1560	19.736	0.7770	6°
REM32W10M	104.775	4.1250	59.512	2.3430	62.585	2.4640	4.750	0.1870	28.854	1.1360	12°

Type	Starting Torque				Radial Static Ultimate Load		Fatigue Load		Weight	
	Normal		Code X							
	Nm	In.-lbs	Nm	In.-lbs	kN	lbs	kN	lbs	g	lbs
REM6W10M	0.056 to 0.678	0.5000 to 6.0000	0.028 to 0.056	0.2500 to 0.5000	10.5	2360	6.5	1470	33	0.072
REM8W10M	0.056 to 0.678	0.5000 to 6.0000	0.028 to 0.056	0.2500 to 0.5000	21.6	4860	10.6	2380	33	0.072
REM10W10M	0.113 to 1.695	1.0000 to 15.0000	0.028 to 0.056	0.2500 to 0.5000	31.9	7180	12.3	2770	39	0.087
REM12W10M	0.113 to 1.695	1.0000 to 15.0000	0.028 to 0.056	0.2500 to 0.5000	38.0	8550	15.9	3570	62	0.136
REM14W10M	0.113 to 1.695	1.0000 to 15.0000	0.056 to 0.113	0.5000 to 1.0000	53.4	12000	21.4	4800	83	0.183
REM16W10M	0.113 to 1.695	1.0000 to 15.0000	0.056 to 0.113	0.5000 to 1.0000	86.7	19500	34.2	7680	126	0.278
REM20W10M	0.113 to 1.695	1.0000 to 15.0000	0.056 to 0.113	0.5000 to 1.0000	97.4	21900	40.8	9180	192	0.424
REM24W10M	0.113 to 1.695	1.0000 to 15.0000	0.056 to 0.113	0.5000 to 1.0000	130.3	29300	51.6	11600	290	0.639
REM28W10M	0.113 to 2.712	1.0000 to 24.0000	0.113 to 0.226	1.0000 to 2.0000	153.5	34500	58.3	13100	437	0.963
REM32W10M	0.113 to 2.712	1.0000 to 24.0000	0.113 to 0.226	1.0000 to 2.0000	357.2	80300	135.2	30400	1155	2.546

Contact

USA: KAMATICS CORPORATION 1330 Blue Hills Avenue Bloomfield, CT 06002 USA | **Tel:** +1 860 243 9704 | **E-mail:** KSB@kaman.com
GERMANY: RWG GERMANY GmbH Medbacher Weg 1 D-91315 Höchstadt a. d. Aisch | **Tel:** +49 (91 93) 50105 100 | **E-mail:** RWG@kaman.com

Rod Ends

REF

- Female Thread
- Self-Lubricating
- Dimensions According to SAE AS81935 / 2

Specifications

Type	d		D		B		C		d_1 (min.)	
	-0.013	-0.0005	±0.254	±0.0100	-0.051	-0.0020	±0.127	±0.0050		
	mm	Inch	mm	Inch	mm	Inch	mm	Inch	mm	Inch
REF 6W10M	4.826	0.1900	20.472	0.8060	11.100	0.4370	8.559	0.3370	7.620	0.3000
REF 8W10M	6.350	0.2500	20.472	0.8060	11.100	0.4370	8.559	0.3370	7.620	0.3000
REF 10W12M	7.937	0.3125	22.860	0.9000	11.100	0.4370	8.305	0.3270	9.144	0.3600
REF 12W12M	9.525	0.3750	26.035	1.0250	12.700	0.5000	10.566	0.4160	11.938	0.4700
REF 14W14M	11.112	0.4375	29.210	1.1500	14.274	0.5620	11.480	0.4520	13.716	0.5400
REF 16W16M	12.700	0.5000	33.959	1.3370	15.875	0.6250	13.081	0.5150	15.494	0.6100
REF 20W20M	15.875	0.6250	38.735	1.5250	19.050	0.7500	14.655	0.5770	19.050	0.7500
REF 24W24M	19.050	0.7500	45.085	1.7750	22.225	0.8750	16.256	0.6400	21.590	0.8500
REF 28W28M	22.225	0.8750	51.435	2.0250	22.225	0.8750	19.431	0.7650	25.400	1.0000
REF 32W40M	25.400	1.0000	70.485	2.7750	34.925	1.3750	25.781	1.0150	32.258	1.2700

Type	L		l		T		S (measured across corners or diameter)		Z	
	±0.254	±0.0100			±0.254	±0.0100			+0.254 -1.574	+0.0100 -0.0620
	mm	Inch	mm	Inch	mm	Inch	mm	Inch	mm	Inch
REF 6W10M	34.925	1.3750	19.050	0.7500	10.719	0.4220	12.700	0.5000	4.775	0.1880
REF 8W10M	37.312	1.4690	19.050	0.7500	10.719	0.4220	12.700	0.5000	4.775	0.1880
REF 10W12M	41.275	1.6250	22.225	0.8750	12.319	0.4850	14.732	0.5800	6.350	0.2500
REF 12W12M	46.024	1.8120	25.400	1.0000	13.894	0.5470	16.764	0.6600	6.350	0.2500
REF 14W14M	50.800	2.0000	28.575	1.1250	15.494	0.6100	18.288	0.7200	6.350	0.2500
REF 16W16M	57.150	2.2500	31.750	1.2500	18.669	0.7350	22.352	0.8800	6.350	0.2500
REF 20W20M	63.500	2.5000	34.925	1.3750	21.844	0.8600	25.908	1.0200	9.525	0.3750
REF 24W24M	73.025	2.8750	41.275	1.6250	25.019	0.9850	29.464	1.1600	9.525	0.3750
REF 28W28M	85.725	3.3750	47.625	1.8750	28.194	1.1100	33.020	1.3000	12.700	0.5000
REF 32W40M	104.775	4.1250	53.975	2.1250	42.875	1.6880	51.308	2.0200	14.300	0.5630

Designation

REF
Number of Series

L
Thread
No Code: Right Hand
L: Left Hand

8 W 10 M
Diameter Code

2
Keyslot
No Code: Without Keyslot
2: With Keyslot

X
Starting Torque
No Code: Normal
X: Reduced

Part Number Example
REF L 8W10 2 M X

** Inch dimensions are for reference only. | * Permanently marked in non-functional area.*

Schematic Drawing

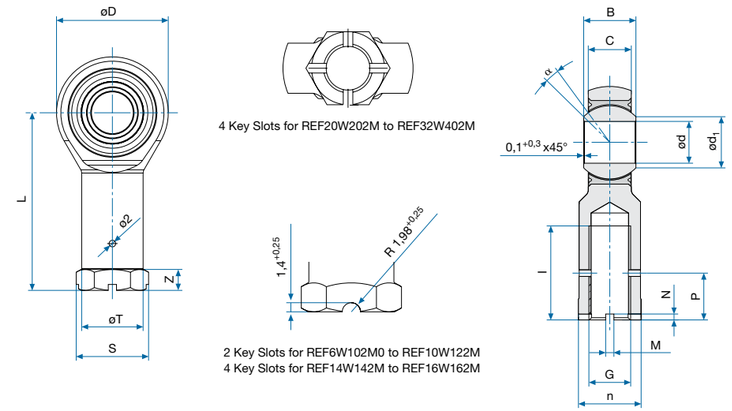

Specifications

REF

Type	n		P		M		N		G	α
	±0.254	±0.0100	±0.508	±0.0200	+0.127	+0.0050	+0.127	+0.0050	UNJF-3B	(min.)
	mm	Inch	mm	Inch	mm	Inch	mm	Inch		
REF 6W10M	11.100	0.4370	9.525	0.3750	-	-	-	-	.3125-24	15°
REF 8W10M	11.100	0.4370	9.525	0.3750	-	-	-	-	.3125-24	15°
REF 10W12M	12.700	0.5000	11.100	0.4370	-	-	-	-	.3750-24	14°
REF 12W12M	14.275	0.5620	11.100	0.4370	-	-	-	-	.3750-24	8°
REF 14W14M	15.875	0.6250	12.700	0.5000	-	-	-	-	.4375-20	10°
REF 16W16M	19.050	0.7500	14.275	0.5620	-	-	-	-	.5000-20	9°
REF 20W20M	22.225	0.8750	17.450	0.6870	3.175	0.1250	1.956	0.0770	.6250-18	12°
REF 24W24M	25.400	1.0000	20.625	0.8120	3.175	0.1250	1.956	0.0770	.7500-16	13°
REF 28W28M	28.575	1.1250	23.800	0.9370	3.962	0.1560	2.184	0.0860	.8750-14	6°
REF 32W40M	44.450	1.7500	33.325	1.3120	4.750	0.1870	2.946	0.1160	1.2500-12	12°

Type	Starting Torque				Radial Static Ultimate Load		Fatigue Load		Weight (Ref.)	
	Normal		Code X							
	Nm	In.-lbs	Nm	In.-lbs	kN	lbs	kN	lbs	g	lbs
REF 6W10M	0.056 to 0.678	0.5000 to 6.0000	0.028 to 0.056	0.2500 to 0.5000	10.5	2360	6.5	1470	36	0.080
REF 8W10M	0.056 to 0.678	0.5000 to 6.0000	0.028 to 0.056	0.2500 to 0.5000	21.6	4860	10.6	2380	38	0.084
REF 10W12M	0.113 to 1.695	1.0000 to 15.0000	0.028 to 0.056	0.2500 to 0.5000	31.9	7180	13.4	3020	46	0.102
REF 12W12M	0.113 to 1.695	1.0000 to 15.0000	0.028 to 0.056	0.2500 to 0.5000	38.0	8550	15.9	3570	73	0.161
REF 14W14M	0.113 to 1.695	1.0000 to 15.0000	0.056 to 0.113	0.5000 to 1.0000	53.4	12000	21.4	4800	96	0.212
REF 16W16M	0.113 to 1.695	1.0000 to 15.0000	0.056 to 0.113	0.5000 to 1.0000	86.7	19500	36.7	8260	147	0.325
REF 20W20M	0.113 to 1.695	1.0000 to 15.0000	0.056 to 0.113	0.5000 to 1.0000	97.4	21900	40.8	9180	218	0.481
REF 24W24M	0.113 to 1.695	1.0000 to 15.0000	0.056 to 0.113	0.5000 to 1.0000	130.3	29300	51.6	11600	305	0.673
REF 28W28M	0.113 to 2.712	1.0000 to 24.0000	0.113 to 0.226	1.0000 to 2.0000	153.5	34500	58.3	13100	435	0.959
REF 32W40M	0.113 to 2.712	1.0000 to 24.0000	0.113 to 0.226	1.0000 to 2.0000	357.2	80300	135.2	30400	1232	2.717

Bearing Materials:	Rod End	Outer Ring	Inner Ring	Liner	Technical Specification
	MIL-S-5000; Cadmium Plated	EN2539 / 1.4548 / 17-4 PH H1150	EN2030 / 1.3544.9 / AISI 440C	per SAE AS81820 / EN2755	SAE AS81935

Contact

USA: KAMATICS CORPORATION 1330 Blue Hills Avenue Bloomfield, CT 06002 USA | **Tel:** +1 860 243 9704 | **E-mail:** KSB@kaman.com
GERMANY: RWG GERMANY GmbH Medbacher Weg 1 D-91315 Höchstadt a. d. Aisch | **Tel:** +49 (91 93) 50105 100 | **E-mail:** RWG@kaman.com

Rod Ends

KR-F Series / AS81935/2

- Rod End
- Female
- Dimensionally Equivalent to AS81935/2

Specifications

Bearing Numbers	B		D / Rod End Dia.		L		F		N / Shank Dia.		E	Q° (min.)
	+0.0000 −0.0005	+0.000 −0.013	±0.0100	±0.254	Thread Length Min.		±0.0100	±0.254	±0.0100	±0.254	UNJF-3B	
	Inch	mm	Inch	mm	Inch	mm	Inch	mm	Inch	mm		
KR3-F	0.1900	4.826	0.8060	20.472	0.7500	19.050	1.3750	34.925	0.4220	10.719	.3125-24	15°
KR4-F	0.2500	6.350	0.8060	20.472	0.7500	19.050	1.4690	37.313	0.4220	10.719	.3125-24	15°
KR5-F	0.3125	7.938	0.9000	22.860	0.8750	22.225	1.6250	41.275	0.4850	12.319	.3750-24	14°
KR6-F	0.3750	9.525	1.0250	26.035	1.0000	25.400	1.8120	46.025	0.5470	13.894	.3750-24	8°
KR7-F	0.4375	11.113	1.1500	29.210	1.1250	28.575	2.0000	50.800	0.6100	15.494	.4375-20	10°
KR8-F	0.5000	12.700	1.3370	33.960	1.2500	31.750	2.2500	57.150	0.7350	18.669	.5000-20	9°
KR10-F	0.6250	15.875	1.5250	38.735	1.3750	34.925	2.5000	63.500	0.8600	21.844	.6250-18	12°
KR12-F	0.7500	19.050	1.7750	45.085	1.6250	41.275	2.8750	73.025	0.9850	25.019	.7500-16	13°
KR14-F	0.8750	22.225	2.0250	51.435	1.8750	47.625	3.3750	85.725	1.1100	28.194	.8750-14	6°
KR16-F	1.0000	25.400	2.7750	70.485	2.1250	53.975	4.1250	104.775	1.6880	42.875	1.2500-12	12°

Bearing Numbers	No Load Rotational Breakaway Torque	
	In-lbs	Nm
3 & 4	0.5 to 6	0.06 to 0.68
5 to 12	1 to 15	0.11 to 1.69
14 to 16	1 to 24	0.11 to 2.71

Designation

KR-F Series
Number of Standard

KR
Basic Rod End Part Number Prefix

6
Diameter Code
.3750 ID (ID in 1/16 increments)

F
Female Rod End Body

S
Rod End Body Material, "S" or "A"

B
KAron B liner (See Table 2 for liner options)

L
"L" for Left Hand Thread

K
"K" for Keyway

Part Number Example
KR 6 - F S B L K

Bearing Materials:

S
Designation
Add Suffix S To P/N For 17-4PH
Body
AMS 5643 (17-4PH) Rc 39 MIN Passivated
Liner
KAron
Race
AMS 5643 (17-4PH) Rc 28 MIN
Ball
AMS 5630 (440C) Rc 55 MIN

A
Designation
Add Suffix A To P/N For Alloy Steel
Body
4340 OR 4230 Alloy Steel Rc 39 MIN CAD. Plated
Liner
KAron
Race
AMS 5643 (17-4PH) Rc 28 MIN
Ball
AMS 5630 (440C) Rc 55 MIN

** Millimeter dimensions are for reference only. | * Permanently marked in non-functional area.*

Schematic Drawing

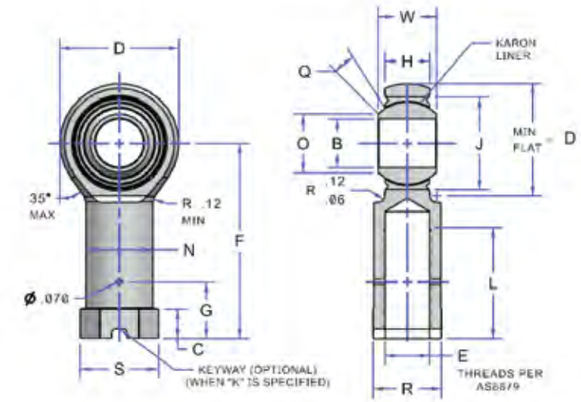

Specifications

KR-F Series / AS81935/2

Bearing Numbers	W		H		O (min.)		G		C		R	
	+0.0000 −0.0020	+0.000 -0.051	±0.0050	±0.127			±0.0200	±0.508	+0.0100 −0.0620	+0.254 -1.575	±0.0100	±0.254
	Inch	mm	Inch	mm	Inch	mm	Inch	mm	Inch	mm	Inch	mm
KR3-F	0.4370	11.100	0.3370	8.560	0.3000	7.620	0.3750	9.525	0.1880	4.775	0.4370	11.100
KR4-F	0.4370	11.100	0.3370	8.560	0.3000	7.620	0.3750	9.525	0.1880	4.775	0.4370	11.100
KR5-F	0.4370	11.100	0.3270	8.306	0.3600	9.144	0.4370	11.100	0.2500	6.350	0.5000	12.700
KR6-F	0.5000	12.700	0.4160	10.566	0.4660	11.836	0.4370	11.100	0.2500	6.350	0.5620	14.275
KR7-F	0.5620	14.275	0.4520	11.481	0.5370	13.640	0.5000	12.700	0.2500	6.350	0.6250	15.875
KR8-F	0.6250	15.875	0.5150	13.081	0.6070	15.418	0.5620	14.275	0.2500	6.350	0.7500	19.050
KR10-F	0.7500	19.050	0.5770	14.656	0.7470	18.974	0.6870	17.450	0.3750	9.525	0.8750	22.225
KR12-F	0.8750	22.225	0.6400	16.256	0.8450	21.463	0.8120	20.625	0.3750	9.525	1.0000	25.400
KR14-F	0.8750	22.225	0.7650	19.431	0.9950	25.273	0.9370	23.800	0.5000	12.700	1.1250	28.575
KR16-F	1.3750	34.925	1.0150	25.781	1.2690	32.233	1.3120	33.325	0.5630	14.300	1.7500	44.450

Bearing Numbers	S		J		Load Ratings See Note 1						Weight Max. (Lbs)	
	Ref Dia or Distance Across Corners		Max. Housing ID		Ultimate Static		Fatigue		Axial Proof			
	Inch	mm	Inch	mm	lbs	kN	lbs	kN	lbs	kN	lbs.	g
KR3-F	0.5000	12.700	0.6250	15.875	2360	10.5	1470	6.5	1000	4.4	0.080	36
KR4-F	0.5000	12.700	0.6250	15.875	4860	21.6	2380	10.6	1000	4.4	0.084	38
KR5-F	0.5800	14.732	0.6875	17.463	7180	31.9	3020	13.4	1100	4.9	0.102	46
KR6-F	0.6600	16.764	0.8125	20.638	8550	38.0	3570	15.9	1660	7.4	0.161	73
KR7-F	0.7200	18.288	0.9062	23.017	12000	53.4	4800	21.4	1850	8.2	0.212	96
KR8-F	0.8800	22.352	1.0000	25.400	19500	86.7	8260	36.7	2040	9.1	0.325	147
KR10-F	1.0200	25.908	1.1875	30.163	21900	97.4	9180	40.8	2430	10.8	0.481	218
KR12-F	1.1600	29.464	1.3750	34.925	29300	130.3	11600	51.6	2810	12.5	0.673	305
KR14-F	1.3000	33.020	1.6250	41.275	34500	153.5	13100	58.3	3320	14.8	0.959	435
KR16-F	2.0200	51.308	2.1250	53.975	80300	357.2	30400	135.2	4340	19.3	2.717	1232

Note 1
Load ratings are based on KAron B liner system.

Contact

USA: KAMATICS CORPORATION 1330 Blue Hills Avenue Bloomfield, CT 06002 USA | **Tel:** +1 860 243 9704 | **E-mail:** KSB@kaman.com
GERMANY: RWG GERMANY GmbH Medbacher Weg 1 D-91315 Höchstadt a. d. Aisch | **Tel:** +49 (91 93) 50105 100 | **E-mail:** RWG@kaman.com

Rod Ends

KR-M Series / AS81935/1

- Rod End
- Male
- Dimensionally Equivalent to AS81935/1

Specifications

Bearing Numbers	B		D		L		F		W	
	+0.0000 −0.0005	+0.000 −0.013	±0.0100	±0.254	±0.0310	±0.787	±0.0100	±0.254	+0.000 −0.0020	+0.00 -0.051
	Inch	mm	Inch	mm	Inch	mm	Inch	mm	Inch	mm
KR3-M	0.1900	4.826	0.8060	20.472	0.9680	24.587	1.5620	39.675	0.4370	11.100
KR4-M	0.2500	6.350	0.8060	20.472	0.9680	24.587	1.5620	39.675	0.4370	11.100
KR5-M	0.3125	7.938	0.9000	22.860	1.1870	30.150	1.8750	47.625	0.4370	11.100
KR6-M	0.3750	9.525	1.0250	26.035	1.1870	30.150	1.9380	49.225	0.5000	12.700
KR7-M	0.4375	11.113	1.1500	29.210	1.2810	32.537	2.1250	53.975	0.5620	14.275
KR8-M	0.5000	12.700	1.3370	33.960	1.4680	37.287	2.4380	61.925	0.6250	15.875
KR10-M	0.6250	15.875	1.5250	38.735	1.5620	39.675	2.6250	66.675	0.7500	19.050
KR12-M	0.7500	19.050	1.7750	45.085	1.6870	42.850	2.8750	73.025	0.8750	22.225
KR14-M	0.8750	22.225	2.0250	51.435	2.0000	50.800	3.3750	85.725	0.8750	22.225
KR16-M	1.0000	25.400	2.7750	70.485	2.3430	59.512	4.1250	104.775	1.3750	34.925

Bearing Numbers	No Load Rotational Breakaway Torque	
	lbs	Nm
3 & 4	0.5 to 6	0.06 to 0.68
5 to 12	1 to 15	0.11 to 1.69
14 to 16	1 to 24	0.11 to 2.71

Designation

KR-M Series

KR
Basic Rod End Part Number Prefix

6
Diameter Code
.3750 ID (ID in 1/16 increments)

M
Male Rod End Body

S
Rod End Body Material, "S" or "A"

B
KAron B liner

L
"L" for Left Hand Thread

K
"K" for Keyway

Part Number Example
KR 6 - M S B L K

Bearing Materials:

S
Designation
Add Suffix S
To P/N For 17-4PH
Body
AMS 5643 (17-4PH)
Rc 39 MIN Passivated
Liner
KAron
Race
AMS 5643 (17-4PH)
Rc 28 MIN
Ball
AMS 5630 (440C)
Rc 55 MIN

A
Designation
Add Suffix A
To P/N For Alloy Steel
Body
4340 OR 4230 Alloy Steel
Rc 39 MIN CAD. Plated
Liner
KAron
Race
AMS 5643 (17-4PH)
Rc 28 MIN
Ball
AMS 5630 (440C)
Rc 55 MIN

** Millimeter dimensions are for reference only. | * Permanently marked in non-functional area.*

Schematic Drawing

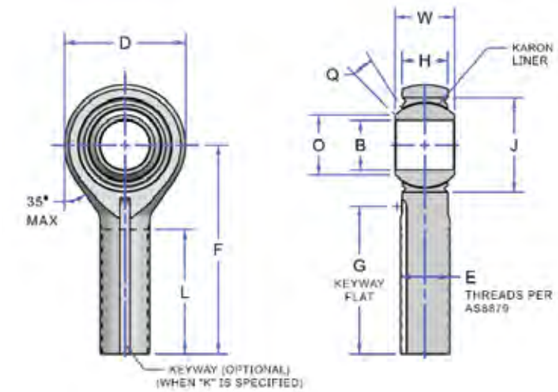

Specifications

KR-M Series / AS81935/1

Bearing Numbers	H		O		G		J		E
	±0.0050	±0.127	(min.)		+0.0000 −0.0200	+0.000 -0.508	Max. Housing ID		UNJF-3A
	Inch	mm	Inch	mm	Inch	mm	Inch	mm	
KR3-M	0.3370	8.560	0.3000	7.620	0.9800	24.892	0.6250	15.875	.3125-24
KR4-M	0.3370	8.560	0.3000	7.620	0.9800	24.892	0.6250	15.875	.3125-24
KR5-M	0.3270	8.306	0.3600	9.144	1.2700	32.258	0.6875	17.463	.3125-24
KR6-M	0.4160	10.566	0.4660	11.836	1.2350	31.369	0.8125	20.638	.3750-24
KR7-M	0.4520	11.481	0.5370	13.640	1.4020	35.611	0.9062	23.017	.4375-20
KR8-M	0.5150	13.081	0.6070	15.418	1.5890	40.361	1.0000	25.400	.5000-20
KR10-M	0.5770	14.656	0.7470	18.974	1.6830	42.748	1.1875	30.163	.6250-18
KR12-M	0.6400	16.256	0.8450	21.463	1.8080	45.923	1.3750	34.925	.7500-16
KR14-M	0.7650	19.431	0.9950	25.273	2.1210	53.873	1.6250	41.275	.8750-14
KR16-M	1.0150	25.781	1.2690	32.233	2.4640	62.586	2.1250	53.975	1.1250-12

Bearing Numbers	Load Ratings See Notes 1 & 2						Weight		Q° (min.)
	Ultimate Static		Fatigue		Axial Proof				
	lbs	kN	lbs	kN	lbs	kN	lbs.	g	
KR3-M	2360	10.5	1470	6.5	1000	4.4	0.080	36	15°
KR4-M	4860	21.6	2380	10.6	1000	4.4	0.084	38	15°
KR5-M	7180	31.9	2770*	12.3*	1100	4.9	0.102	46	14°
KR6-M	8550	38.0	3570	15.9	1660	7.4	0.161	73	8°
KR7-M	12000	53.4	4800	21.4	1850	8.2	0.212	96	10°
KR8-M	19500	86.7	7680*	34.2*	2040	9.1	0.325	147	9°
KR10-M	21900	97.4	9180	40.8	2430	10.8	0.481	218	12°
KR12-M	29300	130.3	11600	51.6	2810	12.5	0.673	305	13°
KR14-M	34500	153.5	13100	58.3	3320	14.8	0.959	435	6°
KR16-M	80300	357.2	30400	135.2	4340	19.3	2.717	1232	12°

Note 1
1. Load ratings are based on KAron B liner system.
2. *Load rating based on shank limitation.

Contact

USA: KAMATICS CORPORATION 1330 Blue Hills Avenue Bloomfield, CT 06002 USA | **Tel:** +1 860 243 9704 | **E-mail:** KSB@kaman.com
GERMANY: RWG GERMANY GmbH Medbacher Weg 1 D-91315 Höchstadt a. d. Aisch | **Tel:** +49 (91 93) 50105 100 | **E-mail:** RWG@kaman.com

Rod Ends

KR-FS Series / Female Miniature

- Rod End
- Female
- Miniature

Specifications

Bearing Numbers	B		D		L		F		N	
	+0.0000 −0.0005	+0.000 −0.013	±0.0100	±0.254	±0.0310	±0.787	±0.0100	±0.254	±0.0100	±0.254
	Inch	mm	Inch	mm	Inch	mm	Inch	mm	Inch	mm
KR047-FS	0.0469	1.191	0.1890	4.801	0.2120	5.385	0.3570	9.068	0.1560	3.962
KR094-FS	0.0938	2.383	0.2500	6.350	0.2600	6.604	0.4910	12.471	0.1870	4.750
KR125-FS	0.1250	3.175	0.4690	11.913	0.5000	12.700	0.9370	23.800	0.2180	5.537
KR156-FS	0.1560	3.962	0.5620	14.275	0.6250	15.875	1.1250	28.575	0.2500	6.350

Bearing Numbers	W		H		S		Ultimate Static Load		E
	+0.0000 −0.0050	+0.000 -0.127	±0.0050	±0.127	Ref Dia or Distance Across Corners		See Notes 1 & 2		UNF-3B
	Inch	mm	Inch	mm	Inch	mm	lbs.	kN	
KR047-FS	0.1090	2.769	0.0820	2.083	0.2000	5.080	225	1.0	0-80
KR094-FS	0.1250	3.175	0.0840	2.134	0.2300	5.842	400	1.8	3-56
KR125-FS	0.2500	6.350	0.1870	4.750	0.2630	6.680	850	3.8	6-32
KR156-FS	0.2810	7.137	0.2190	5.563	0.2950	7.493	1050	4.7	8-32

Notes
1. Load ratings shown are based on KAron B liner system only.
2. No load rotational breakaway torque = 1 inch pound maximum.

Schematic Drawing

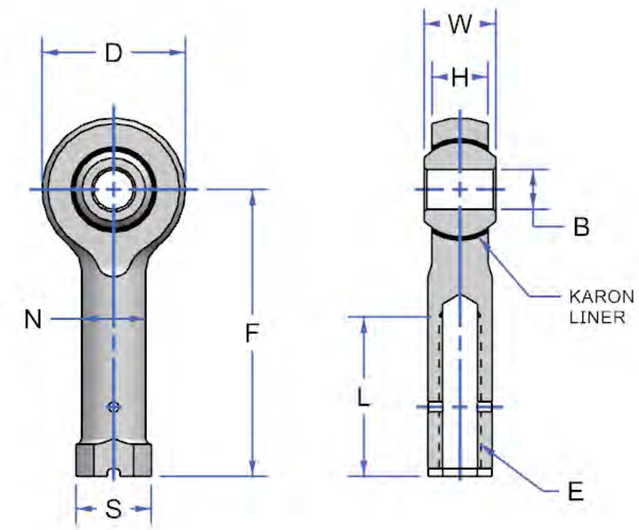

Designation

KR-M Series

KR
Basic Rod End Part Number Prefix

094
Diameter Code
.0938 ID, Bore Size In 0.001 Inch Increments

FS
Miniature Female Rod End Body

B
KAron B liner

L
"L" for Left Hand Thread

K
"K" for Keyway

Part Number Example
KR 094 – FS B L K

Bearing Materials:

Liner
KAron

Rod End Body
AMS 5643 (17-4PH) Rc 28 MIN

Ball
AMS 5630 (440C) Rc 55 MIN

** Millimeter dimensions are for reference only. | * Permanently marked in non-functional area.*

Contact

USA: KAMATICS CORPORATION 1330 Blue Hills Avenue Bloomfield, CT 06002 USA | **Tel:** +1 860 243 9704 | **E-mail:** KSB@kaman.com
GERMANY: RWG GERMANY GmbH Medbacher Weg 1 D-91315 Höchstadt a. d. Aisch | **Tel:** +49 (91 93) 50105 100 | **E-mail:** RWG@kaman.com

Rod Ends

KR-MS Series / Male Miniature

- Rod End
- Male
- Miniature

Specifications

Bearing Numbers	B		D		G		E
	+0.0000 −0.0005	+0.000 −0.013	±0.0100	±0.254	±0.0310	±0.787	UNF-3A
	Inch	mm	Inch	mm	Inch	mm	
KR047-MS	0.0469	1.191	0.1890	4.801	0.2120	5.385	0-80
KR094-MS	0.0938	2.383	0.2500	6.350	0.2600	6.604	3-56
KR125-MS	0.1250	3.175	0.4690	11.913	0.5000	12.700	6-32
KR156-MS	0.1560	3.962	0.5620	14.275	0.6250	15.875	8-32

Bearing Numbers	F		W		H		Ultimate Static Load	
	±0.0100	±0.254	+0.0000 −0.0050	+0.000 -0.127	±0.0050	±0.127	See Notes 1 & 2	
	Inch	mm	Inch	mm	Inch	mm	lbs.	kN
KR047-MS	0.3570	9.068	0.1090	2.769	0.0820	2.083	225	1.0
KR094-MS	0.4910	12.471	0.1250	3.175	0.0840	2.134	400	1.8
KR125-MS	0.9370	23.800	0.2500	6.350	0.1870	4.750	850	3.8
KR156-MS	1.1250	28.575	0.2810	7.137	0.2190	5.563	1050	4.7

Notes
1. Load ratings shown are based on KAron B liner system only.
2. No load rotational breakaway torque = 1 inch pound maximum.

Schematic Drawing

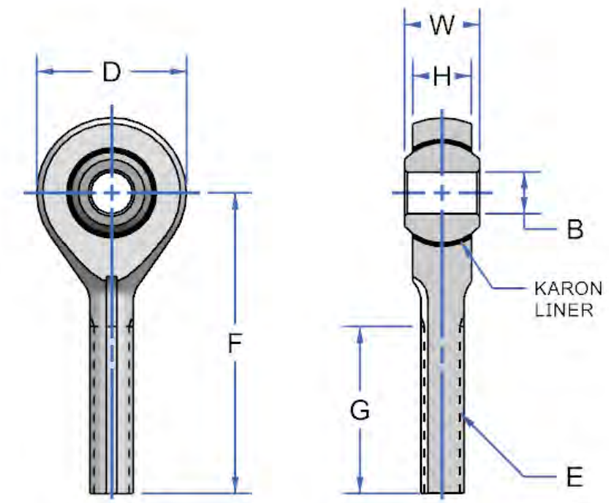

Designation

KR-M Series

KR
Basic Rod End Part Number Prefix

094
Diameter Code
.0938 ID, Bore Size In 0.001 Inch Increments

MS
Miniature Male Rod End Body

B
KAron B liner

L
"L" for Left Hand Thread

K
"K" for Keyway

Part Number Example
KR 094 – MS B L K

Bearing Materials:

Liner
KAron

Rod End Body
AMS 5643 (17-4PH) Rc 28 MIN

Ball
AMS 5630 (440C) Rc 55 MIN

** Millimeter dimensions are for reference only. | * Permanently marked in non-functional area.*

Contact

USA: KAMATICS CORPORATION 1330 Blue Hills Avenue Bloomfield, CT 06002 USA | **Tel:** +1 860 243 9704 | **E-mail:** KSB@kaman.com
GERMANY: RWG GERMANY GmbH Medbacher Weg 1 D-91315 Höchstadt a. d. Aisch | **Tel:** +49 (91 93) 50105 100 | **E-mail:** RWG@kaman.com

Track Rollers / Cam Followers

PRODUCT OVERVIEW

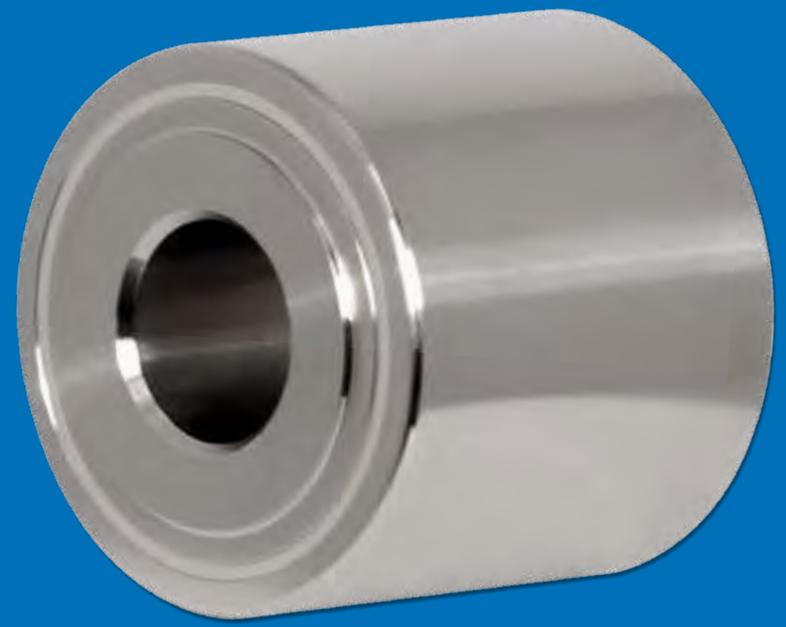

KAMATICS·RWG

Track Rollers / Cam Followers

PRODUCT OVERVIEW

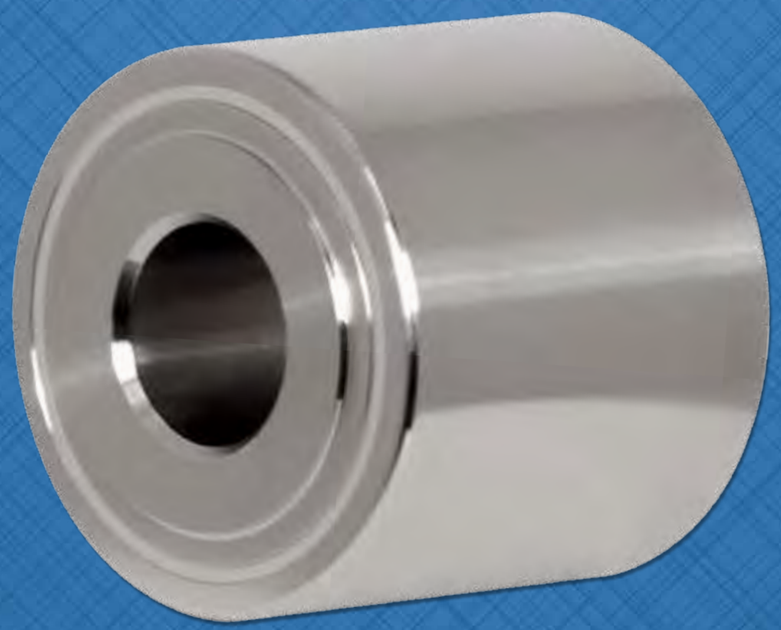

Table of Contents

PRODUCT	PAGE
KAron Molded Liner	
KRP562 / NAS 562	230-231
KRP567 / KRP 562 with Crowned Outer Race	232-233
KRP502 / AS24465	234-235
KRP503 / AS24466	236-237
KRP522 / KRP 502 with Crowned Outer Race	238-239
KRP523 / Heavy Duty Track Rollers	240-241
KRP527 / Self-Aligning Track Rollers	242-243
KRP505 / AS24461	244-245
KRP506 / AS24462	246-247

PRODUCT	PAGE
KAron Molded Liner Airframe Pivot Bearing	
KRP( ) Series / AS27640	248-249
KRP( ) A Series / AS27641	250-251
KRP( ) B Series / AS27642	252-253
KRP( ) BS Series / AS27648	254-255
KRP( ) P Series / AS27644	256-257
KRPB500 / AS27646	258-259

Track Rollers/ Cam Followers

KRP562 / NAS 562 SERIES

- Studded
- Self-Lubricating
- Track Roller
- Cam Follower Bearings
- Dimensionally Equivalent to NAS 562 Series

Specifications

Bearing Numbers	B		D		H		F		S		Thread Size UNJF-3A per AS8879
	+0.0000 -0.0010	+0.000 –0.025	+0.0010 -0.0005	+0.025 -0.013	+0.0050 -0.0050	+0.127 –0.127	Dist to Cotter Pin Hole (min.)		Thread Length (Ref)		
	Inch	mm	Inch	mm	Inch	mm	Inch	mm	Inch	mm	
KRP562-3	0.1900	4.826	0.5000	12.700	0.2810	7.137	0.2110	5.359	0.3440	8.738	.1900-32
KRP562-4	0.2500	6.350	0.6875	17.463	0.2810	7.137	0.2240	5.690	0.3440	8.738	.2500-28
KRP562-5	0.3120	7.925	0.7500	19.050	0.3440	8.738	0.2340	5.944	0.3590	9.119	.3125-24
KRP562-6	0.3750	9.525	0.8750	22.225	0.4690	11.913	0.2650	6.731	0.3590	9.119	.3750-24
KRP562-7	0.4370	11.100	1.0000	25.400	0.5310	13.487	0.2830	7.188	0.4220	10.719	.4375-20
KRP562-8	0.5000	12.700	1.1250	28.575	0.6560	16.662	0.3140	7.976	0.4220	10.719	.5000-20

Bearing Numbers	L (Keyway Length)		M		N (Key Width)		G (Slot Depth)		P (Hole Dia)		T	
	+0.0300 -0.0000	+0.762 -0.000	Keyway Runout (Ref)		+0.0020 -0.0020	+0.051 -0.051	+0.0100 -0.0100	+0.254 -0.254	+0.0100 -0.0000	+0.254 -0.000	Track Contact Width (min.)	
	Inch	mm	Inch	mm	Inch	mm	Inch	mm	Inch	mm	Inch	mm
KRP562-3	-	-	-	-	-	-	-	-	0.0700	1.778	0.2300	5.842
KRP562-4	0.3370	8.560	0.4370	11.100	0.0635	1.613	0.2143	5.443	0.0760	1.930	0.2300	5.842
KRP562-5	0.3270	8.306	0.4370	11.100	0.0635	1.613	0.2738	6.955	0.0760	1.930	0.2900	7.366
KRP562-6	0.4160	10.566	0.5000	12.700	0.0947	2.405	0.3236	8.219	0.1060	2.692	0.3800	9.652
KRP562-7	0.4520	11.481	0.5620	14.275	0.0947	2.405	0.3861	9.807	0.1060	2.692	0.4300	10.922
KRP562-8	0.5150	13.081	0.6250	15.875	0.1260	3.200	0.4330	10.998	0.1060	2.692	0.5300	13.462

Bearing Numbers	A		Radial Static Limit Load (See Notes 2 & 3)	
	Ring Dia (min.)			
	Inch	mm	lbs	kN
KRP562-3	0.4000	10.160	2925	13.0
KRP562-4	0.5700	14.478	3625	16.1
KRP562-5	0.5900	14.986	5290	23.5
KRP562-6	0.7200	18.288	10000	44.5
KRP562-7	0.8400	21.336	13325	59.3
KRP562-8	0.9700	24.638	18200	81.0

NOTES

1. Stud Length = Nominal Grip Length + "S" Thread Length, +.031, -.016
2. Load ratings shown are based on KAron V liner system.
3. Loads shown are based on liner capacity only.

Schematic Drawing

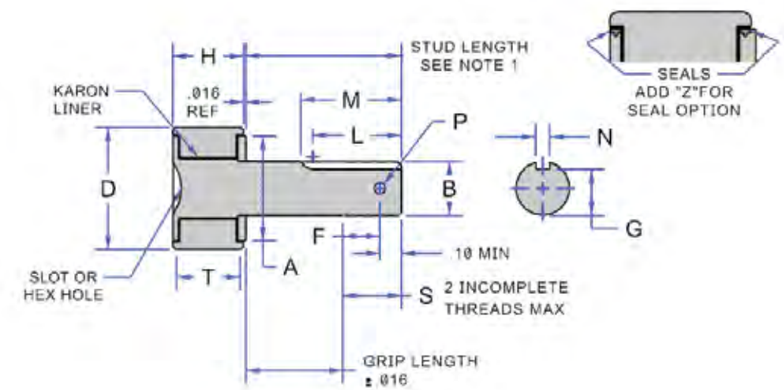

KRP562 Series / NAS 562 (Ref)

Designation

KRP562
Number of Standard

KRP
KAron Track Roller Bearing Prefix

562
Studded Roller Series, Crowned Outer Race

-6
.3750 Stud Diameter
(Diameter in 1/16 increments)

V
KAron V Liner

T
Track Roller Designation
(not optional in p/n)

Z
Add "Z" for Seal Option

A
Add "A" for NO Cotter Pin Hole

K
Add "K" for Keyway Option

-16
1.000 Stud Grip Length
(Length in 1/16 Increments)

S
Add "S" for PH13-8MO CRES Stud Option.

D
Add "D" for 440C Outer Race Option

Part Number Example
KRP 562 -6 V T Z A K -16 S D

Bearing Materials:

Z
Add Suffix Z To P/N for Seal Option (Acetal Resin or Nylon)

D
Add Suffix D To P/N for AMS 5630 (440C) Rc 55-62 Outer Race

S
Add Suffix S To P/N for AMS 5629 (PH13-8MO) Rc 43 MIN (COND H1000 REF) Stud & Thrust Ring

Liner
KAron

Standard Stud & Thrust Ring
AMS 5643 (17-4PH) Rc 40 MIN (COND H900 Reference)

Standard Outer Race
AMS 5617 Custom 455 Rc 47 MIN

For all Sizes:

Radial Play
0.0015 to 0.0035 inches
0.038 to 0.089 mm

Axial Play
0.005 to 0.015 inches
0.130 to 0.381 mm

** Millimeter dimensions are for reference only. | * Permanently marked in non-functional area.*

Contact

USA: KAMATICS CORPORATION 1330 Blue Hills Avenue Bloomfield, CT 06002 USA | **Tel:** +1 860 243 9704 | **E-mail:** KSB@kaman.com
GERMANY: RWG GERMANY GmbH Medbacher Weg 1 D-91315 Höchstadt a. d. Aisch | **Tel:** +49 (91 93) 50105 100 | **E-mail:** RWG@kaman.com

Track Rollers/ Cam Followers

KRP567 / NAS 562 Series with Crowned Outer Race

- Studded
- Self-Lubricating Crowned Outer Race
- Track Roller
- Cam Follower Bearings
- Otherwise Dimensionally Equivalent to KRP 562 Series

Schematic Drawing

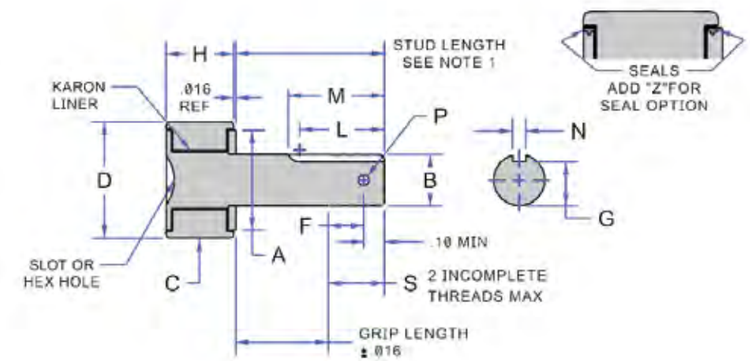

Specifications

Bearing Numbers	B		D		H		F		S		Thread Size UNJF-3A per MIL-S-8879
	+0.0000 -0.0010	+0.000 –0.025	+0.0010 -0.0005	+0.025 -0.013	+0.0050 -0.0050	+0.127 –0.127	Dist to Cotter Pin Hole (min.)		Thread Length (Ref)		
	Inch	mm	Inch	mm	Inch	mm	Inch	mm	Inch	mm	
KRP567-3	0.1900	4.826	0.5000	12.700	0.2810	7.137	0.2110	5.359	0.3440	8.738	.1900-32
KRP567-4	0.2500	6.350	0.6875	17.463	0.2810	7.137	0.2240	5.690	0.3440	8.738	.2500-28
KRP567-5	0.3120	7.925	0.7500	19.050	0.3440	8.738	0.2340	5.944	0.3590	9.119	.3125-24
KRP567-6	0.3750	9.525	0.8750	22.225	0.4690	11.913	0.2650	6.731	0.3590	9.119	.3750-24
KRP567-7	0.4370	11.100	1.0000	25.400	0.5310	13.487	0.2830	7.188	0.4220	10.719	.4375-20
KRP567-8	0.5000	12.700	1.1250	28.575	0.6560	16.662	0.3140	7.976	0.4220	10.719	.5000-20

Bearing Numbers	L (Keyway Length)		M		N (Key Width)		G (Slot Depth)		P (Hole Dia)		C	
	+0.0300 -0.0000	+0.762 0.000	Keyway Runout (Ref)		+0.0020 -0.0020	+0.051 -0.051	+0.0100 -0.0100	+0.254 -0.254	+0.0100 -0.0000	+0.254 0.000	Crown Radius Ref	
	Inch	mm	Inch	mm	Inch	mm	Inch	mm	Inch	mm	Inch	mm
KRP567-3	-	-	-	-	-	-	-	-	0.0700	1.778	6.0000	152.400
KRP567-4	0.3370	8.560	0.4370	11.100	0.0635	1.613	0.2143	5.443	0.0760	1.930	6.0000	152.400
KRP567-5	0.3270	8.306	0.4370	11.100	0.0635	1.613	0.2738	6.955	0.0760	1.930	7.0000	177.800
KRP567-6	0.4160	10.566	0.5000	12.700	0.0947	2.405	0.3236	8.219	0.1060	2.692	8.0000	203.200
KRP567-7	0.4520	11.481	0.5620	14.275	0.0947	2.405	0.3861	9.807	0.1060	2.692	10.0000	254.000
KRP567-8	0.5150	13.081	0.6250	15.875	0.1260	3.200	0.4330	10.998	0.1060	2.692	12.0000	304.800

Bearing Numbers	A		Radial Static Limit Load (See Notes 2 & 3)	
	Ring Dia (min.)			
	Inch	mm	lbs	kN
KRP567-3	0.4000	10.160	2925	13.0
KRP567-4	0.5700	14.478	3625	16.1
KRP567-5	0.5900	14.986	5290	23.5
KRP567-6	0.7200	18.288	10000	44.5
KRP567-7	0.8400	21.336	13325	59.3
KRP567-8	0.9700	24.638	18200	81.0

NOTES

1. Stud Length = Nominal Grip Length + "S" Thread Length, +.031, -.016
2. Load ratings shown are based on KAron V liner system.
3. Loads shown are based on liner capacity only.

KRP567 / NAS 562 Series with Crowned Outer Race

Designation

KRP567
Number of Standard

KRP
KAron Track Roller Bearing Prefix

567
Studded Roller Series, Crowned Outer Race

-6
.3750 Stud Diameter
(Diameter in 1/16 increments)

V
KAron V Liner

T
Track Roller Designation
(not optional in p/n)

Z
Add "Z" for Seal Option

A
Add "A" for NO Cotter Pin Hole Option

K
Add "K" for Keyway Option

-16
1.000 Stud Grip Length
(Length in 1/16 Increments)

S
Add "S" for PH13-8MO CRES Stud Option

D
Add "D" for 440C CRES Outer Race Option

Part Number Example
KRP 567 –6 V T Z A K –16 S D

Bearing Materials:

Z
Add Suffix Z To P/N for Seal Option (Acetal Resin or Nylon)

D
Add Suffix D To P/N for AMS 5630 (440C) Rc 55 Min Outer Race

S
Add Suffix S To P/N for AMS 5629 (PH13-8MO) COND H1000 Rc 40 MIN Stud & Thrust Ring

Liner
Karon V

Standard Stud & Thrust Ring
AMS 5643 (17-4PH) Rc 40 MIN (COND H900 Reference)

Standard Outer Race
AMS 5617 Custom 455 Rc 47 MIN

For all Sizes:

Radial Play
0.0015 to 0.0035 inches
0.038 to 0.089 mm

Axial Play
0.005 to 0.015 inches
0.130 to 0.381 mm

** Millimeter dimensions are for reference only. | * Permanently marked in non-functional area.*

Contact

USA: KAMATICS CORPORATION 1330 Blue Hills Avenue Bloomfield, CT 06002 USA | **Tel:** +1 860 243 9704 | **E-mail:** KSB@kaman.com
GERMANY: RWG GERMANY GmbH Medbacher Weg 1 D-91315 Höchstadt a. d. Aisch | **Tel:** +49 (91 93) 50105 100 | **E-mail:** RWG@kaman.com

Track Rollers/ Cam Followers

KRP502 / AS24465

- KAron Lined
- Self-Lubricating Track Roller
- Cam Follower Dimensionally Equivalent to AS24465 Series

Schematic Drawing

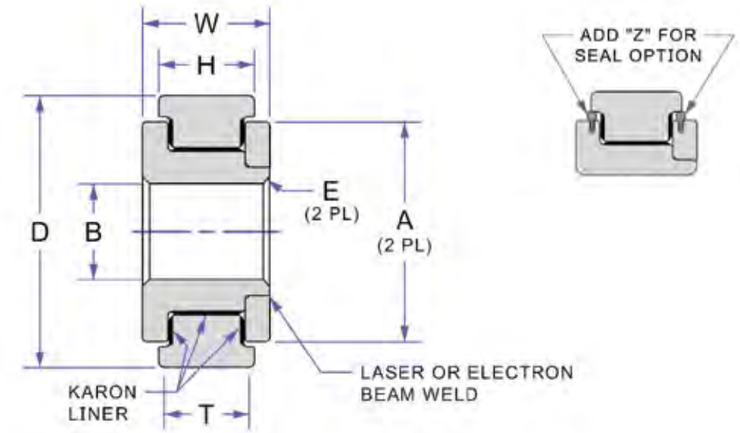

Specifications

Bearing Numbers	B		D		W		H		E	
	+0.0000 −0.0005	+0.000 −0.013	+0.0000 −0.0010	+0.000 -0.025	+0.0000 −0.0050	+0.000 −0.127	+0.0000 −0.0050	+0.000 −0.127	Radius or 45 Deg Chamfer to Clear Fillet Rad	
	Inch	mm	Inch	mm	Inch	mm	Inch	mm	Inch	mm
KRP502-03	0.1900	4.826	0.7500	19.050	0.3120	7.925	0.2180	5.537	0.0220	0.559
KRP502-04	0.2500	6.350	0.8750	22.225	0.3750	9.525	0.2810	7.137	0.0220	0.559
KRP502-06	0.3750	9.525	1.0625	26.988	0.5000	12.700	0.3750	9.525	0.0220	0.559
KRP502-08	0.5000	12.700	1.3125	33.338	0.6250	15.875	0.5000	12.700	0.0320	0.813
KRP502-10	0.6250 / 0.6243	15.875 / 15.857	1.5000	38.100	0.7500	19.050	0.6250	15.875	0.0320	0.813
KRP502-12	0.7500 / 0.7493	19.050 / 19.032	1.7500	44.450	1.0000	25.400	0.8750	22.225	0.0320	0.813
KRP502-14	0.8750 / 0.8743	22.225 / 22.207	2.0000	50.800	1.1250	28.575	1.0000	25.400	0.0320	0.813

Bearing Numbers	A		T		Radial Static Limit Load (See Notes 1 & 2)		Axial Static Limit Load		Weight	
	Thrust Ring Dia (Ref)		Track Contact Width Min							
	Inch	mm	Inch	mm	lbs	kN	lbs	kN	lbs	g
KRP502-03	0.6300	16.002	0.1250	3.175	4095	18.2	2035	9.1	0.03	13.6
KRP502-04	0.6800	17.272	0.2180	5.537	6665	29.6	2490	11.1	0.06	27.2
KRP502-06	0.9400	23.876	0.3120	7.925	11935	53.1	3465	15.4	0.10	45.4
KRP502-08	1.1200	28.448	0.4380	11.125	20930	93.1	4520	20.1	0.19	86.2
KRP502-10	1.2500	31.750	0.5620	14.275	29675	132.0	5500	24.5	0.30	136.1
KRP502-12	1.5000	38.100	0.7500	19.050	52000	231.3	6555	29.2	0.55	249.5
KRP502-14	1.6200	41.148	0.8750	22.225	76700	341.2	7760	34.5	0.85	385.6

NOTES

1. Load ratings shown are based on KAron V liner system.
2. Loads shown are based on liner capacity only.

KRP502 / AS24465

Designation

KRP502 Series
Number of Standard

KRP
KAron Track Roller Bearing Prefix

502
Non-Studded Roller Series

-06
.3750 Stud Diameter
(Diameter in 1/16 increments)

V
KAron V Liner

T
Track Roller Designation
(not optional in p/n)

Z
Add "Z" for Seal Option

D
Add "D" for 440C Outer Race Option

Part Number Example
KRP 502 –06 V T Z D

Bearing Materials:

D
Add Suffix D To Part Number for 440C Outer Race AMS 5630 Rc 55-62

Z
Add Suffix Z To P/N for Seal Option (Acetal Resin or Nylon)

Liner
KAron V

Thrust Ring
AMS 5643 (17-4PH) Rc 28 MIN (COND H1150 Reference)

Inner Race
AMS 5643 (17-4PH) Rc 28 MIN (COND H1150 Reference)

Outer Race
AMS 5617 Custom 455 Rc 47 Min

For all Sizes:

Radial Play
0.0015 to 0.0035 inches
0.038 to 0.089 mm

Axial Play
0.005 to 0.015 inches
0.130 to 0.381 mm

** Millimeter dimensions are for reference only. | * Permanently marked in non-functional area.*

Contact

USA: KAMATICS CORPORATION 1330 Blue Hills Avenue Bloomfield, CT 06002 USA | **Tel:** +1 860 243 9704 | **E-mail:** KSB@kaman.com
GERMANY: RWG GERMANY GmbH Medbacher Weg 1 D-91315 Höchstadt a. d. Aisch | **Tel:** +49 (91 93) 50105 100 | **E-mail:** RWG@kaman.com

Track Rollers/ Cam Followers

KRP503/ AS24466

- Self-Lubricating Airframe
- Pivot & Track Roller Bearings
- Dimensionally Equivalent to AS24466 Series

Schematic Drawing

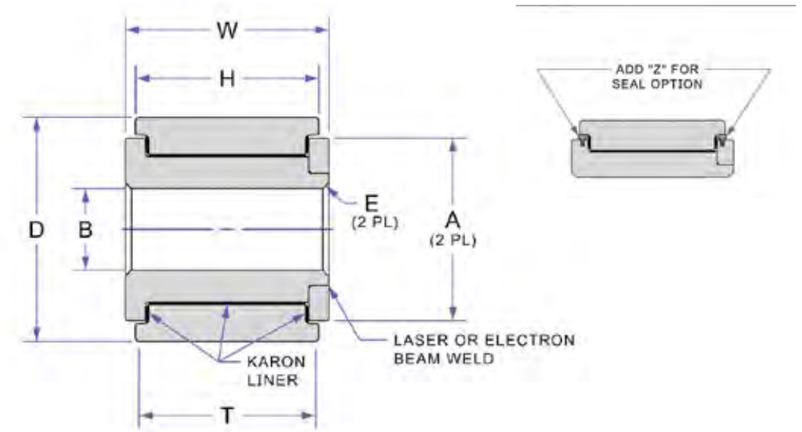

Specifications

Bearing Numbers	B / Stud Dia		D / Roller Outer Dia		W / Inner Race Width		H / Outer Race Width		E	
	+0.0000 −0.0005	+0.000 −0.013	+0.0000 −0.0010	+0.000 -0.025	+0.0000 −0.0050	+0.000 −0.127	+0.0000 −0.0050	+0.000 −0.127	Radius or 45 Deg Chamfer to Clear Fillet Rad	
	Inch	mm	Inch	mm	Inch	mm	Inch	mm	Inch	mm
KRP503-06	0.3750	9.525	1.1250	28.575	1.0000	25.400	0.8750	22.225	0.0220	0.559
KRP503-08	0.5000	12.700	1.3750	34.925	1.2500	31.750	1.1250	28.575	0.0320	0.813
KRP503-10	.6250 / .6243	15.875 / 15.857	1.6250	41.275	1.5000	38.100	1.3750	34.925	0.0320	0.813
KRP503-12	.7500 / .7493	19.050 / 19.032	1.8750	47.625	1.7500	44.450	1.6250	41.275	0.0320	0.813
KRP503-14	.8750 / .8743	22.225 / 22.207	2.1250	53.975	2.0000	50.800	1.8750	47.625	0.0320	0.813

Bearing Numbers	A		T		Radial Static Limit Load (See Notes 1 & 2)		Axial Static Limit Load		Weight	
	Thrust Ring Dia (Ref)		Track Contact Width Min							
	Inch	mm	Inch	mm	lbs	kN	lbs	kN	lbs	g
KRP503-06	0.9400	23.876	0.7500	19.050	30160	134.2	3615	16.1	0.25	113.4
KRP503-08	1.1200	28.448	1.0000	25.400	48750	216.9	4670	20.8	0.45	204.1
KRP503-10	1.3300	33.782	1.1250	28.575	75565	336.1	5650	25.1	0.74	335.7
KRP503-12	1.5800	40.132	1.3750	34.925	102375	455.4	6630	29.5	1.14	517.1
KRP503-14	1.7200	43.688	1.6250	41.275	141440	629.2	7535	33.5	1.65	748.4

NOTES

1. Load ratings shown are based on KAron V liner system.
2. Loads shown are based on liner capacity only.

KRP503/ AS24466

Designation

KRP503 Series
Number of Standard

KRP
KAron Track Roller Bearing Prefix

503
Non-Studded Roller Series

-06
.3750 Stud Diameter
(Diameter in 1/16 increments)

V
KAron V Liner

T
Track Roller Designation
(not optional in p/n)

Z
Add "Z" for Seal Option

D
Add "D" for 440C Outer Race Option

Part Number Example
KRP 503 – 06 V T Z D

Bearing Materials:

D
Add Suffix D To Part Number for 440C Outer Race AMS 5630 Rc 55-6255-62

Z
Add Suffix Z To P/N for Seal Option (Acetal Resin or Nylon)

Liner
KAron V

Thrust Ring
AMS 5643 (17-4PH) Rc 28 MIN (COND H1150 Reference)

Inner Race
AMS 5643 (17-4PH) Rc 28 MIN (COND H1150 Reference)

Outer Race
AMS 5617 Custom 455 Rc 47 Min

For all Sizes:
Radial Play
0.0015 to 0.0035 inches
0.038 to 0.089 mm

Axial Play
0.005 to 0.015 inches
0.130 to 0.381 mm

** Millimeter dimensions are for reference only. | * Permanently marked in non-functional area.*

Contact

USA: KAMATICS CORPORATION 1330 Blue Hills Avenue Bloomfield, CT 06002 USA | **Tel:** +1 860 243 9704 | **E-mail:** KSB@kaman.com
GERMANY: RWG GERMANY GmbH Medbacher Weg 1 D-91315 Höchstadt a. d. Aisch | **Tel:** +49 (91 93) 50105 100 | **E-mail:** RWG@kaman.com

Track Rollers/ Cam Followers

KRP522 / KRP 502 with Crowned Outer Race

- Self-Lubricating
- Airframe Bearing
- Crowned Outer Race
- Similar to KRP 502 Series with Crowned Outer Race

Specifications

Bearing Numbers	B / Bore Dia.		D / Roller Outer Dia.		W / Inner Race Width		H / Outer Race Width		E / Radius or 45 Deg Chamfer	
	+0.0000 –0.0007	+0.000 –0.018	+0.0000 –0.0010	+0.000 -0.025	+0.0000 –0.0100	+0.000 –0.254	+0.0000 –0.0150	+0.000 –0.381	+0.0100 –0.0000	+0.254 –0.000
	Inch	mm	Inch	mm	Inch	mm	Inch	mm	Inch	mm
KRP522-03	0.1900	4.826	0.7500	19.050	0.3120	7.925	0.2800	7.112	0.0220	0.559
KRP522-04	0.2500	6.350	0.8750	22.225	0.3750	9.525	0.3450	8.763	0.0220	0.559
KRP522-06	0.3750	9.525	1.0025	25.464	0.5000	12.700	0.4550	11.557	0.0220	0.559
KRP522-08	0.5000	12.700	1.3125	33.338	0.6250	15.875	0.5800	14.732	0.0320	0.813
KRP522-10	0.6250	15.875	1.5000	38.100	0.7500	19.050	0.7050	17.907	0.0320	0.813
KRP522-12	0.7500	19.050	1.7500	44.450	1.0000	25.400	0.9500	24.130	0.0320	0.813
KRP522-14	0.8750	22.225	2.0000	50.800	1.1250	28.575	1.0750	27.305	0.0320	0.813
KRP522-16	1.0000	25.400	2.1250	53.975	1.1870	30.150	1.1370	28.880	0.0320	0.813
KRP522-20	1.2500	31.750	2.2500	57.150	1.2500	31.750	1.2000	30.480	0.0320	0.813
KRP522-24	1.5000	38.100	3.0010 / 2.9988	76.225 / 76.170	1.5000	38.100	1.4400	36.576	0.0320	0.813
KRP522-28	1.7500	44.450	3.4385 / 3.4363	87.338 / 87.282	1.5000	38.100	1.4400	36.576	0.0320	0.813
KRP522-32	2.0000	50.800	3.8760 / 3.8738	98.450 / 98.395	1.5000	38.100	1.4400	36.576	0.0320	0.813
KRP522-36	2.2500	57.150	4.3135 / 4.3113	109.563 / 109.507	1.5000	38.100	1.4400	36.576	0.0320	0.813
KRP522-40	2.5000	63.500	4.7510 / 4.7488	120.675 / 120.620	1.5000	38.100	1.4400	36.576	0.0320	0.813
KRP522-44	2.7500	69.850	5.0010 / 4.9988	127.025 / 126.970	1.5000	38.100	1.4400	36.576	0.0320	0.813

Bearing Numbers	A		R		Cr		Radial Static Limit Load (See Notes 1 & 2)		Weight	
	Thrust Ring Dia (Ref)		+0.0100 –0.0000	+0.254 -0.000	Crown Radius Ref					
	Inch	mm	Inch	mm	Inch	mm	lbs	kN	lbs	g
KRP522-03	0.4400	11.176	0.0220	0.559	10.0000	254.000	4800	21.4	0.03	13.6
KRP522-04	0.5200	13.208	0.0220	0.559	10.0000	254.000	7700	34.3	0.06	27.2
KRP522-06	0.6700	17.018	0.0220	0.559	10.0000	254.000	13000	57.8	0.10	45.4
KRP522-08	0.8400	21.336	0.0320	0.813	12.5000	317.500	23000	102.3	0.19	86.2
KRP522-10	0.9500	24.130	0.0320	0.813	17.5000	444.500	35000	155.7	0.30	136.1
KRP522-12	1.1100	28.194	0.0320	0.813	25.0000	635.000	52500	233.5	0.55	249.5
KRP522-14	1.2200	30.988	0.0320	0.813	27.5000	698.500	66700	296.7	0.85	385.6
KRP522-16	1.6300	41.402	0.0320	0.813	30.0000	762.000	82400	366.5	1.30	589.7
KRP522-20	1.7500	44.450	0.0320	0.813	30.0000	762.000	104000	462.6	1.75	793.8
KRP522-24	2.0000	50.800	0.0320	0.813	60.0000	1524.000	145000	645.0	2.20	997.9
KRP522-28	2.2800	57.912	0.0320	0.813	60.0000	1524.000	163500	727.3	2.90	1315.4
KRP522-32	2.5600	65.024	0.0320	0.813	60.0000	1524.000	181500	807.4	3.60	1633.0
KRP522-36	2.8600	72.644	0.0320	0.813	60.0000	1524.000	207000	920.8	4.50	2041.2
KRP522-40	3.1100	78.994	0.0320	0.813	60.0000	1524.000	226500	1007.6	5.40	2449.4
KRP522-44	3.3400	84.836	0.0320	0.813	60.0000	1524.000	236000	1049.8	5.60	2540.2

Schematic Drawing

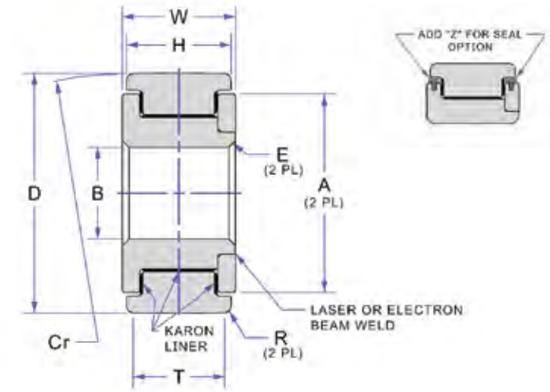

KRP522 / KRP 502 with Crowned Outer Race

Designation

KRP522 Series
Number of Standard

KRP
KAron Bearing Prefix

522
Crowned Track Roller Series

-06
.3750 Stud Diameter
(Diameter in 1/16 increments)

V
KAron V Liner

T
Add "T" for Track Roller
(not optional in p/n)

Z
Add "Z" for Seal Option

D
Add "D" for 440C Outer Race Option

Part Number Example
KRP 522 – 06 V T Z D

Bearing Materials:

D
Add Suffix D To Part Number for 440C Outer Race AMS 5630 Rc 55-62

Z
Add Suffix Z To P/N for Seal Option (Acetal Resin or Nylon)

Liner
KAron V

Thrust Ring
AMS 5643 (17-4PH) Rc 28 MIN (COND H1150 Reference)

Inner Race
AMS 5643 (17-4PH) Rc 28 MIN (COND H1150 Reference)

Outer Race
AMS 5617 Custom 455 Rc 47 Min

For all Sizes:
Radial Play
0.0015 to 0.0035 inches
0.038 to 0.089 mm

Axial Play
0.005 to 0.015 inches
0.130 to 0.381 mm

** Millimeter dimensions are for reference only. | * Permanently marked in non-functional area.*

NOTES

1. Load ratings shown are based on KAron V liner system.
2. Loads shown are based on liner capacity only.

Contact

USA: KAMATICS CORPORATION 1330 Blue Hills Avenue Bloomfield, CT 06002 USA | **Tel:** +1 860 243 9704 | **E-mail:** KSB@kaman.com
GERMANY: RWG GERMANY GmbH Medbacher Weg 1 D-91315 Höchstadt a. d. Aisch | **Tel:** +49 (91 93) 50105 100 | **E-mail:** RWG@kaman.com

Track Rollers/ Cam Followers

KRP523 / KRP 503 Series Heavy Duty Track Rollers

- Self-Lubricating
- Pivot & Track Roller Bearings
- Typical Aircraft High Load Flap Track Roller Series

Specifications

Bearing Numbers	B / Bore Dia.		D / Roller Outer Dia.		W / Inner Race Width		H / Outer Race Width	
	+0.0000 –0.0005	+0.000 –0.013	+0.0000 –0.0010	+0.000 -0.025	+0.0000 –0.0050	+0.000 –0.127	+0.0000 –0.0050	+0.000 –0.127
	Inch	mm	Inch	mm	Inch	mm	Inch	mm
KRP523-04	0.2500	6.350	0.8750	22.225	0.7500	19.050	0.7100	18.034
KRP523-06	0.3750	9.525	1.1250	28.575	1.0000	25.400	0.9400	23.876
KRP523-08	0.5000	12.700	1.3750	34.925	1.2500	31.750	1.1900	30.226
KRP523-10	0.6250	15.875	1.6250	41.275	1.5000	38.100	1.4400	36.576
KRP523-12	0.7500	19.050	1.8750	47.625	1.7500	44.450	1.6900	42.926
KRP523-14	0.8750	22.225	2.1250	53.975	2.0000	50.800	1.9400	49.276
KRP523-16	1.0000	25.400	2.3750	60.325	2.2500	57.150	2.1900	55.626
KRP523-20	1.2500	31.750	2.7500	69.850	2.5000	63.500	2.4400	61.976
KRP523-24	1.5000	38.100	2.9988 / 3.0010	76.170 / 76.225	2.7500	69.850	2.6900	68.326
KRP523-28	1.7500	44.450	3.4363 / 3.4385	87.338 / 87.282	3.0000	76.200	2.9400	74.676
KRP523-32	2.0000	50.800	3.8738 / 3.8760	98.450 / 98.395	3.0000	76.200	2.9400	74.676

Bearing Numbers	E / Radius or 45 Deg Chamfer		A		T		Radial Static Limit Load (See Notes 1 & 2)		Weight	
	+0.0100 –0.0000	+0.254 –0.000	Thrust Ring Dia (Ref)		Tract Contract Width Min					
	Inch	mm	Inch	mm	Inch	mm	lbs	kN	lbs	g
KRP523-04	0.0220	0.559	0.5200	13.208	0.5800	14.732	16500	73.4	0.12	54.4
KRP523-06	0.0220	0.559	0.6700	17.018	0.7500	19.050	29000	129.0	0.25	113.4
KRP523-08	0.0320	0.813	0.8400	21.336	1.0000	25.400	50000	222.4	0.45	204.1
KRP523-10	0.0320	0.813	0.9500	24.130	1.1300	28.702	76000	338.1	0.74	335.7
KRP523-12	0.0320	0.813	1.1100	28.194	1.3800	35.052	98000	435.9	1.14	517.1
KRP523-14	0.0320	0.813	1.2200	30.988	1.6300	41.402	127000	564.9	1.65	748.4
KRP523-16	0.0320	0.813	1.5800	40.132	1.8800	47.752	173000	769.6	2.30	1043.3
KRP523-20	0.0320	0.813	1.6300	41.402	2.0300	51.562	223000	992.0	3.30	1496.9
KRP523-24	0.0320	0.813	2.0000	50.800	2.2800	57.912	283000	1258.9	4.10	1859.8
KRP523-28	0.0320	0.813	2.2800	57.912	2.6300	66.802	350000	1556.9	5.80	2630.9
KRP523-32	0.0320	0.813	2.5600	65.024	2.6300	66.802	388000	1726.0	7.30	3311.3

NOTES

1. Load ratings shown are based on KAron V liner system.
2. Loads shown are based on liner capacity only.

Schematic Drawing

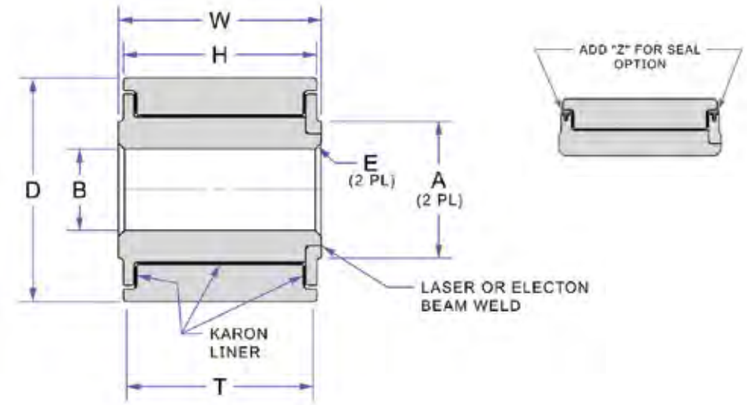

KRP523 / KRP 503 Series Heavy Duty Track Rollers

Designation

KRP523 Series
Number of Standard

KRP
KAron Track Roller Bearing Prefix

523
Non-Studded Roller Series

-06
.3750 Stud Diameter
(Diameter in 1/16 increments)

V
KAron V Liner

T
Track Roller Designation
(not optional in p/n)

Z
Add "Z" for Seal Option

D
Add "D" for 440C Outer Race Option

Part Number Example
KRP 523 – 06 V T Z D

Bearing Materials:

D
Add Suffix D To Part Number for 440C Outer Race AMS 5630 Rc 55-62

Z
Add Suffix Z To P/N for Seal Option (Acetal Resin or Nylon)

Liner
KAron V

Thrust Ring
AMS 5643 (17-4PH) Rc 28 MIN (COND H1150 Reference)

Inner Race
AMS 5643 (17-4PH) Rc 28 MIN (COND H1150 Reference)

Outer Race
AMS 5617 Custom 455 Rc 47 Min

For all Sizes:
Radial Play
0.0015 to 0.0035 inches
0.038 to 0.089 mm

Axial Play
0.005 to 0.015 inches
0.130 to 0.381 mm

** Millimeter dimensions are for reference only. | * Permanently marked in non-functional area.*

Contact

USA: KAMATICS CORPORATION 1330 Blue Hills Avenue Bloomfield, CT 06002 USA | **Tel:** +1 860 243 9704 | **E-mail:** KSB@kaman.com
GERMANY: RWG GERMANY GmbH Medbacher Weg 1 D-91315 Höchstadt a. d. Aisch | **Tel:** +49 (91 93) 50105 100 | **E-mail:** RWG@kaman.com

Track Rollers/ Cam Followers

KRP527 / Self-Aligning Track Rollers

- KAron Lined
- Self-Aligning
- Self-Lubricating Track Roller
- Cam Follower Series

Schematic Drawing

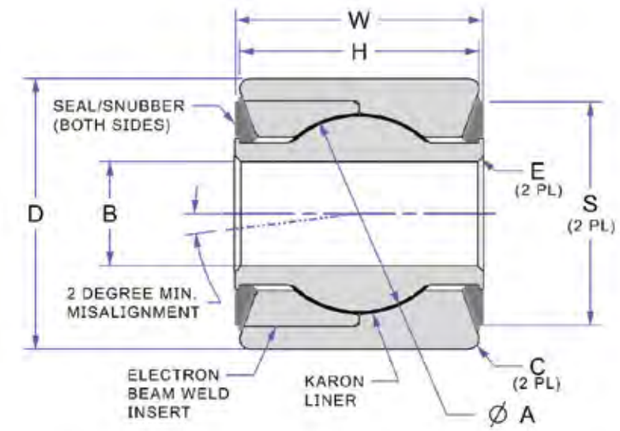

Specifications

Bearing Numbers	B / Bore Dia.		D / Roller Outer Dia.		W / Inner Race Width		H / Outer Race Width		E / Radius or 45 Deg Chamfer	
	+0.0000 −0.0007	+0.000 −0.018	+0.0000 −0.0010	+0.000 -0.025	+0.0000 −0.0100	+0.000 −0.254	+0.0000 −0.0050	+0.000 −0.127	+0.0100 −0.0000	+0.254 −0.000
	Inch	mm	Inch	mm	Inch	mm	Inch	mm	Inch	mm
KRP527-04	0.2500	6.350	0.8750	22.225	0.7500	19.050	0.6560	16.662	0.0220	0.559
KRP527-06	0.3750	9.525	1.1250	28.575	1.0000	25.400	0.9400	23.876	0.0220	0.559
KRP527-08	0.5000	12.700	1.3750	34.925	1.2500	31.750	1.1900	30.226	0.0320	0.813
KRP527-10	0.6250	15.875	1.6250	41.275	1.5000	38.100	1.4400	36.576	0.0320	0.813
KRP527-12	0.7500	19.050	1.8750	47.625	1.7500	44.450	1.6900	42.926	0.0320	0.813
KRP527-14	0.8750	22.225	2.1250	53.975	2.0000	50.800	1.9400	49.276	0.0320	0.813

Bearing Numbers	A Thrust Ring Dia (Ref)		C Corner Radius Minimum		S Clamp-Up Diameter (Ref)		Radial Static Limit Load (See Notes 1 & 2)		Weight (Ref)	
	Inch	mm	Inch	mm	Inch	mm	lbs	kN	lbs	g
KRP527-04	0.6100	15.494	0.0200	0.508	0.5200	13.208	12600	56.0	0.12	54.4
KRP527-06	0.8000	20.320	0.0400	1.016	0.6700	17.018	20100	89.4	0.25	113.4
KRP527-08	0.9680	24.587	0.0500	1.270	0.8400	21.336	27500	122.3	0.45	204.1
KRP527-10	1.2000	30.480	0.0500	1.270	0.9100	23.114	49000	218.0	0.74	335.7
KRP527-12	1.3750	34.925	0.0500	1.270	1.1100	28.194	52400	233.1	1.14	517.1
KRP527-14	1.6200	41.148	0.0500	1.270	1.2200	30.988	71300	317.2	1.65	748.4

NOTES

1. Load ratings shown are based on KAron V liner system.
2. Loads shown are based on liner capacity only.

Designation

KRP527 Series
Number of Standard

KRP
KAron Bearing Prefix

527
Self-Aligning Roller Series

-08
.5000 Bore Diameter
(Diameter in 1/16 increments)

V
KAron V Liner
(See Table 1 for liner Options)

T
Track Roller Application

Part Number Example
KRP 527 -08 V T

Bearing Materials:

Liner
KAron

Seal / Snubber
PTFE / ELASTOMER

Inner Race
AMS 5643 (17-4PH) Rc 28 MIN
(COND H1150 Reference)

Outer Race & Insert
AMS 5617 Custom 455 Rc
47 Min

Radial Play
0.0030 inches maximum
0.076 mm maximum

Rotational Torque (no-load)
2 inch-pounds maximum
0.23 N-m maximum

** Millimeter dimensions are for reference only. | * Permanently marked in non-functional area.*

Contact

USA: KAMATICS CORPORATION 1330 Blue Hills Avenue Bloomfield, CT 06002 USA | **Tel:** +1 860 243 9704 | **E-mail:** KSB@kaman.com
GERMANY: RWG GERMANY GmbH Medbacher Weg 1 D-91315 Höchstadt a. d. Aisch | **Tel:** +49 (91 93) 50105 100 | **E-mail:** RWG@kaman.com

Track Rollers/ Cam Followers

KRP505 / AS24461

- Self-Lubricating
- Airframe
- Pivot & Track Roller Bearings
- Dimensionally Equivalent to AS24461 Series

Specifications

Bearing Numbers	B / Bore Dia.		D / Roller Outer Dia.		W / Inner Race Width		H / Outer Race Width	
	+0.0000 −0.0005	+0.000 −0.013	+0.0000 −0.0005	+0.000 -0.013	+0.0000 −0.0050	+0.000 −0.127	+0.0000 −0.0050	+0.000 −0.127
	Inch	mm	Inch	mm	Inch	mm	Inch	mm
KRP505-03	0.1900	4.826	0.6875	17.463	0.3120	7.925	0.2180	5.537
KRP505-04	0.2500	6.350	0.7500	19.050	0.3750	9.525	0.2810	7.137
KRP505-05	0.3125	7.938	0.8125	20.638	0.4370	11.100	0.3440	8.738
KRP505-06	0.3750	9.525	0.8750	22.225	0.5620	14.275	0.4690	11.913
KRP505-07	0.4375	11.113	0.9375	23.813	0.6250	15.875	0.5310	13.487
KRP505-08	0.5000	12.700	1.1250	28.575	0.7500	19.050	0.6560	16.662
KRP505-09	0.5625 / 0.5618	14.288 / 14.270	1.1875	30.163	0.8750	22.225	0.7810	19.837
KRP505-10	0.6250 / 0.6243	15.875 / 15.857	1.2500	31.750	1.0000	25.400	0.9060	23.012
KRP505-12	0.7500 / 0.7493	19.050 / 19.032	1.3750	34.925	1.1250	28.575	1.0000	25.400
KRP505-14	0.8750 / 0.8743	22.225 / 22.207	1.6250	41.275	1.2500	31.750	1.1250	28.575
KRP505-16	1.0000 / 0.9993	25.400 / 25.382	1.7500	44.450	1.2500	31.750	1.1250	28.575
KRP505-20	1.2500 / 1.2493	31.750 / 31.732	2.0000 / 1.9994	50.800 / 50.785	1.2500	31.750	1.0490	26.645
KRP505-24	1.5000 / 1.4993	38.100 / 38.082	2.2500 / 2.2494	57.150 / 57.135	1.2500	31.750	1.0490	26.645
KRP505-28	1.7500 / 1.7493	44.450 / 44.432	2.5000 / 2.4994	63.500 / 63.485	1.2500	31.750	1.0490	26.645
KRP505-32	2.0000 / 1.9993	50.800 / 50.782	2.7500 / 2.7494	69.850 / 69.835	1.2500	31.750	1.0490	26.645
KRP505-36	2.2500 / 2.2493	57.150 / 57.132	3.0000 / 2.9994	76.200 / 76.185	1.2500	31.750	1.0490	26.645
KRP505-40	2.5000 / 2.4993	63.500 / 63.482	3.2500 / 3.2492	82.550 / 82.530	1.2500	31.750	1.0490	26.645
KRP505-44	2.7500 / 2.7493	69.850 / 69.832	3.5000 / 3.4992	88.900 / 88.880	1.2500	31.750	1.0490	26.645
KRP505-48	3.0000 / 2.9993	76.200 / 76.182	3.7500 /3.7492	95.250 / 95.230	1.2500	31.750	1.0490	26.645
KRP505-52	3.2500 / 3.2492	82.550 / 82.530	4.0000 / 3.9992	101.600 / 101.580	1.2500	31.750	1.0490	26.645

Designation

KRP505 — Number of Standard

KRP — KAron Bearing Prefix

505 — Airframe / Pivot / Roller Series

-06 — .3750 Stud Diameter (Diameter in 1/16 increments)

V — KAron V Liner

T — Add "T" for Track Roller (Custom 455 Outer Race) Option

Z — Add "Z" for Seal Option

D — Add "D" for 440C Outer Race Option

P — Add "P" for OD Cadmium Plate Option (per QQ-P-416 Type II, Class 2)

Part Number Example

KRP 505 –06 V T Z D P

** Millimeter dimensions are for reference only. | * Permanently marked in non-functional area.*

NOTES

1. Load ratings shown are based on KAron V liner system.
2. Loads shown are based on liner capacity only.

Schematic Drawing

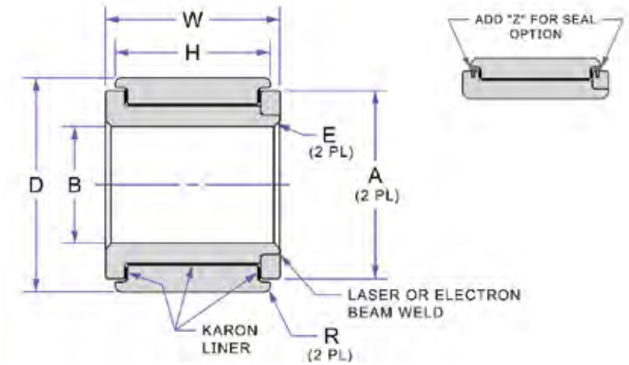

Specifications

KRP505 / AS24461

Bearing Numbers	E		A		R		Radial Static Limit Load (See Notes 1 & 2)		Axial Static Limit Load		Weight (Ref)	
	Radius or 45 Deg Chamfer to Clear Fillet Rad		Thrust Ring Dia (Ref)		+0.0100 −0.0000	+0.254 −0.000						
	Inch	mm	Inch	mm	Inch	mm	lbs	kN	lbs	kN	lbs	g
KRP505-03	0.0220	0.559	0.5300	13.462	0.0220	0.559	4055	18.0	2035	9.1	0.03	13.6
KRP505-04	0.0220	0.559	0.6100	15.494	0.0220	0.559	6665	29.6	2485	11.1	0.04	18.1
KRP505-05	0.0220	0.559	0.6400	16.256	0.0220	0.559	9165	40.8	2940	13.1	0.05	22.7
KRP505-06	0.0220	0.559	0.7200	18.288	0.0220	0.559	15445	68.7	3465	15.4	0.07	31.8
KRP505-07	0.0320	0.813	0.7800	19.812	0.0320	0.813	19890	88.5	3920	17.4	0.09	40.8
KRP505-08	0.0320	0.813	0.9700	24.638	0.0320	0.813	28665	127.5	4520	20.1	0.17	77.1
KRP505-09	0.0320	0.813	1.0300	26.162	0.0320	0.813	35570	158.2	4965	22.1	0.22	99.8
KRP505-10	0.0320	0.813	1.0900	27.686	0.0320	0.813	42640	189.7	5425	24.1	0.27	122.5
KRP505-12	0.0320	0.813	1.2200	30.988	0.0320	0.813	56810	252.7	6405	28.5	0.34	154.2
KRP505-14	0.0320	0.813	1.4700	37.338	0.0320	0.813	73710	327.9	7385	32.9	0.53	240.4
KRP505-16	0.0320	0.813	1.5500	39.370	0.0320	0.813	85315	379.5	8440	37.5	0.58	263.1
KRP505-20	0.0320	0.813	1.8000	45.720	0.0320	0.813	102375	455.4	10325	45.9	0.69	313.0
KRP505-24	0.0320	0.813	2.0500	52.070	0.0320	0.813	119440	531.3	12210	54.3	0.79	358.3
KRP505-28	0.0320	0.813	2.3000	58.420	0.0320	0.813	136500	607.2	14090	62.7	0.90	408.2
KRP505-32	0.0320	0.813	2.5500	64.770	0.0320	0.813	153565	683.1	15975	71.1	1.00	453.6
KRP505-36	0.0320	0.813	2.8000	71.120	0.0320	0.813	170625	759.0	17890	79.6	1.11	503.5
KRP505-40	0.0320	0.813	3.0500	77.470	0.0320	0.813	187690	834.9	19745	87.8	1.22	553.4
KRP505-44	0.0320	0.813	3.3000	83.820	0.0320	0.813	204750	910.8	21630	96.2	1.33	603.3
KRP505-48	0.0320	0.813	3.5500	90.170	0.0320	0.813	221915	987.2	23510	104.6	1.43	648.6
KRP505-52	0.0320	0.813	3.8000	96.520	0.0320	0.813	238875	1062.6	25470	113.3	1.50	680.4

Bearing Materials:

D
Add Suffix D To Part Number for 440C Outer Race AMS 5630 Rc 55-62

T
Add Suffix "T" for Track Roller Option AMS 5617 Outer Race Custom 455 Rc 47 MIN

Z
Add Suffix Z To P/N for Seal Option (Acetal Resin or Nylon)

Liner
KAron V

Thrust Ring
AMS 5643 (17-4PH) Rc 40 MIN (COND H900 Reference)

Inner Race
AMS 5643 (17-4PH) Rc 40 MIN (COND H900 Reference)

Outer Race
AMS 5643 (17-4PH) Rc 28 Min (COND H1150 Reference)

For all Sizes:

Radial Play
0.0015 to 0.0035 inches
0.038 to 0.089 mm

Axial Play
0.005 to 0.015 inches
0.127 to 0.381 mm

Contact

USA: KAMATICS CORPORATION 1330 Blue Hills Avenue Bloomfield, CT 06002 USA | **Tel:** +1 860 243 9704 | **E-mail:** KSB@kaman.com
GERMANY: RWG GERMANY GmbH Medbacher Weg 1 D-91315 Höchstadt a. d. Aisch | **Tel:** +49 (91 93) 50105 100 | **E-mail:** RWG@kaman.com

Track Rollers/ Cam Followers

KRP506 / AS24462

- Self-Lubricating
- Airframe
- Pivot & Track Roller Bearings
- Dimensionally Equivalent to AS24462 Series

Specifications

Bearing Numbers	B / Bore Dia.		D / Roller Outer Dia.		W / Inner Race Width		H / Outer Race Width		E	
	+0.0000 –0.0005	+0.000 –0.013	+0.0000 –0.0010	+0.000 -0.025	+0.0000 –0.0050	+0.000 –0.127	+0.0000 –0.0050	+0.000 –0.127	Radius or 45 Deg Chamfer to Clear Fillet Rad	
	Inch	mm	Inch	mm	Inch	mm	Inch	mm	Inch	mm
KRP506-03	0.1900	4.826	0.6250	15.875	0.6250	15.875	0.5000	12.700	0.0220	0.559
KRP506-04	0.2500	6.350	0.6250	15.875	0.5620	14.275	0.5000	12.700	0.0220	0.559
KRP506-05	0.3125	7.938	0.6875	17.463	0.6250	15.875	0.5000	12.700	0.0220	0.559
KRP506-06	0.3750	9.525	0.7500	19.050	0.8120	20.625	0.7500	19.050	0.0220	0.559
KRP506-07	0.4375	11.113	0.8125	20.638	0.8750	22.225	0.7500	19.050	0.0220	0.559
KRP506-08	0.5000	12.700	1.0000	25.400	0.8750	22.225	0.7500	19.050	0.0320	0.813
KRP506-10	0.6250	15.875	1.1250	28.575	0.8750	22.225	0.7500	19.050	0.0320	0.813
KRP506-12	0.7500	19.050	1.2500	31.750	1.1250	28.575	1.0000	25.400	0.0320	0.813
KRP506-14	0.8750	22.225	1.3750	34.925	1.1250	28.575	1.0000	25.400	0.0320	0.813
KRP506-16	1.0000	25.400	1.5000	38.100	1.1250	28.575	1.0000	25.400	0.0320	0.813
KRP506-20	1.2500	31.750	1.8750	47.625	1.3750	34.925	1.2500	31.750	0.0320	0.813

Bearing Numbers	A		R / Radius or 45 Deg Chamfer		Radial Static Limit Load (See Notes 1 & 2)		Axial Static Limit Load		Weight	
	Thrust Ring Dia (Ref)		+0.0010 –0.0000	+0.254 -0.000						
	Inch	mm	Inch	mm	lbs	kN	lbs	kN	lbs	g
KRP506-03	0.5100	12.954	0.0220	0.559	11600	51.6	2035	9.1	0.05	22.7
KRP506-04	0.5100	12.954	0.0220	0.559	10580	47.1	2335	10.4	0.04	18.1
KRP506-05	0.5700	14.478	0.0220	0.559	14255	63.4	2790	12.4	0.06	27.2
KRP506-06	0.6300	16.002	0.0220	0.559	22425	99.8	3315	14.7	0.08	36.3
KRP506-07	0.6900	17.526	0.0220	0.559	26210	116.6	3695	16.4	0.09	40.8
KRP506-08	0.8800	22.352	0.0320	0.813	30890	137.4	4370	19.4	0.14	63.5
KRP506-10	1.0000	25.400	0.0320	0.813	36970	164.5	5350	23.8	0.16	72.6
KRP506-12	1.1200	28.448	0.0320	0.813	48670	216.5	6255	27.8	0.25	113.4
KRP506-14	1.2500	31.750	0.0320	0.813	56785	252.6	7235	32.2	0.28	127.0
KRP506-16	1.3800	35.052	0.0320	0.813	72760	323.7	8140	36.2	0.31	140.6
KRP506-20	1.7500	44.450	0.0320	0.813	111815	497.4	10025	44.6	0.61	276.7

NOTES

1. Load ratings shown are based on KAron V liner system.
2. Loads shown are based on liner capacity only.

Schematic Drawing

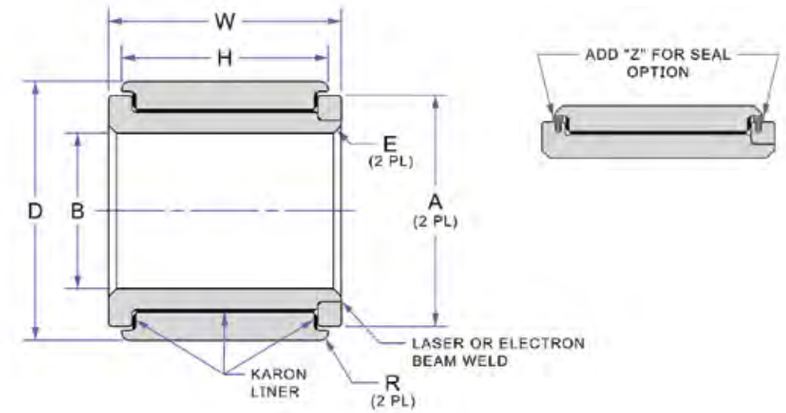

KRP506 / AS24462

Designation

KRP506 Series
Number of Standard

KRP
KAron Bearing Prefix

506
Airframe/Pivot/Roller Series

-06
.3750 Stud Diameter
(Diameter in 1/16 increments)

V
KAron V Liner
(See Table 1 for liner Options)

T
Add "T" for Track Roller (Custom 455 Outer Race) Option

Z
Add "Z" for Seal Option

D
Add "D" for 440C Outer Race Option

P
Add "P" for OD Cadmium Plate Option
(per AMS-QQ-P-416 Type II, Class 2)

Part Number Example
KRP 506 –06 V T Z D P

Bearing Materials:

D
Add Suffix D To Part Number for 440C Outer Race AMS 5630 Rc 55-62

T
Add Suffix T for Track Roller Option AMS 5617 Outer Race Custom 455 Rc 47 MIN

Z
Add Suffix Z To P/N for Seal Option (Acetal Resin or Nylon)

Liner
KAron V

Thrust Ring
AMS 5643 (17-4PH) Rc 40 MIN (COND H900 Reference)

Inner Race
AMS 5643 (17-4PH) Rc 40 MIN (COND H900 Reference)

Outer Race
AMS 5643 (17-4PH) Rc 28 MIN (COND H1150 Reference)

For all Sizes:

Radial Play
0.0015 to 0.0035 inches
0.038 to 0.089 mm

Axial Play
0.005 to 0.015 inches
0.127 to 0.381 mm

** Millimeter dimensions are for reference only. | * Permanently marked in non-functional area.*

Contact

USA: KAMATICS CORPORATION 1330 Blue Hills Avenue Bloomfield, CT 06002 USA | **Tel:** +1 860 243 9704 | **E-mail:** KSB@kaman.com
GERMANY: RWG GERMANY GmbH Medbacher Weg 1 D-91315 Höchstadt a. d. Aisch | **Tel:** +49 (91 93) 50105 100 | **E-mail:** RWG@kaman.com

Track Rollers/ Cam Followers

KRP( ) Series / AS27640

- Self-Lubricating
- Airframe/Pivot Bearings
- Dimensionally Equivalent to AS27640 Series

Specifications

Bearing Numbers	B / Bore Dia.		D / Roller Outer Dia.		W / Inner Race Width		H / Outer Race Width		E / Radius or 45 Deg Chamfer	
	+0.0000 −0.0005	+0.000 −0.013	+0.0000 −0.0005	+0.000 -0.013	+0.0000 −0.0050	+0.000 −0.127	+0.0000 −0.0050	+0.000 −0.127	+0.0150 −0.0000	+0.381 −0.000
	Inch	mm	Inch	mm	Inch	mm	Inch	mm	Inch	mm
KRP03	0.1900	4.826	0.7774	19.746	0.2970	7.544	0.2700	6.858	0.0050	0.127
KRP04	0.2500	6.350	0.9014	22.896	0.4840	12.294	0.3350	8.509	0.0050	0.127
KRP05	0.3125	7.938	1.2500	31.750	0.5580	14.173	0.3750	9.525	0.0150	0.381
KRP06	0.3750	9.525	1.4375	36.513	0.6200	15.748	0.4690	11.913	0.0150	0.381
KRP08	0.5000	12.700	1.6875	42.863	0.6200	15.748	0.5000	12.700	0.0150	0.381
KRP10	0.6250	15.875	1.9375	49.213	0.6200	15.748	0.5000	12.700	0.0150	0.381

Bearing Numbers	A		C / 45 Deg Chamfer		Radial Static Limit Load (See Notes 1 & 2)		Axial Static Limit Load		Weight	
	Thrust Ring Dia (Ref)		+0.0150 −0.0000	+0.381 -0.000						
	Inch	mm	Inch	mm	lbs	kN	lbs	kN	lbs	g
KRP03	0.3500	8.890	0.0220	0.559	3410	15.2	2035	9.1	0.04	18.1
KRP04	0.4100	10.414	0.0320	0.813	5860	26.1	2490	11.1	0.07	31.8
KRP05	0.4700	11.938	0.0320	0.813	7640	34.0	2940	13.1	0.14	63.5
KRP06	0.5900	14.986	0.0320	0.813	13425	59.7	3768	16.8	0.23	104.3
KRP08	0.7700	19.558	0.0440	1.118	17680	78.6	5200	23.1	0.31	140.6
KRP10	0.8500	21.590	0.0440	1.118	22100	98.3	6200	27.6	0.38	172.4

NOTES

1. Load ratings shown are based on KAron V liner system.
2. Loads shown are based on liner capacity only.

Schematic Drawing

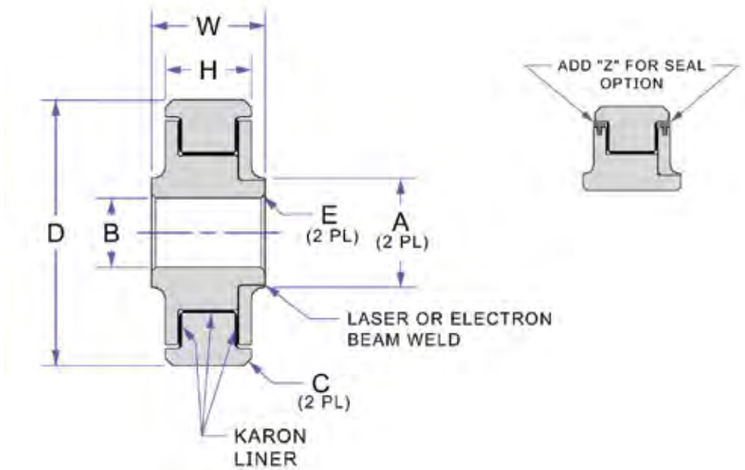

KRP( ) Series / AS27640

Designation

KRP ( ) Series
Number of Standard

KRP
KAron Bearing Prefix

-06
.3750 Stud Diameter
(Diameter in 1/16 increments)

V
KAron V Liner
(See Table 1 for liner Options)

Z
Track Roller Application
Add "Z" for Seal Option

P
Add "P" for OD Cadmium Plate Option
(per AMS-QQ-P-416 Type II, Class 2)

Part Number Example
KRP 06 V Z P

Bearing Materials:

Z
Add Suffix Z
To P/N for Seal Option (Acetal Resin or Nylon)

Liner
KAron V

Thrust Ring
AMS 5643 (17-4PH) Rc 40 MIN
(COND H900 Reference)

Inner Race
AMS 5643 (17-4PH) Rc 40 MIN
(COND H900 Reference)

Outer Race
AMS 5643(17-4PH) Rc 28 MIN
(COND H1150 Reference)

For all Sizes:

Radial Play
0.0015 to 0.0035 inches
0.038 to 0.089 mm

Axial Play
0.005 to 0.015 inches
0.127 to 0.381 mm

** Millimeter dimensions are for reference only. | * Permanently marked in non-functional area.*

Contact

USA: KAMATICS CORPORATION 1330 Blue Hills Avenue Bloomfield, CT 06002 USA | **Tel:** +1 860 243 9704 | **E-mail:** KSB@kaman.com
GERMANY: RWG GERMANY GmbH Medbacher Weg 1 D-91315 Höchstadt a. d. Aisch | **Tel:** +49 (91 93) 50105 100 | **E-mail:** RWG@kaman.com

Track Rollers/ Cam Followers

KRP ( ) A Series / AS27641

- Self-Lubricating
- Narrow Airframe/Pivot Bearings
- Dimensionally Equivalent to AS27641 Series

Specifications

Bearing Numbers	B / Bore Dia.		D / Roller Outer Dia.		W / Inner Race Width		H / Outer Race Width		E / 45 Deg Chamfer	
	+0.0000 –0.0005	+0.000 –0.013	+0.0000 –0.0005	+0.000 -0.013	+0.0000 –0.0050	+0.000 –0.127	+0.0000 –0.0050	+0.000 –0.127	+0.0150 –0.0000	+0.381 –0.000
	Inch	mm	Inch	mm	Inch	mm	Inch	mm	Inch	mm
KRP03A	0.1900	4.826	0.6250	15.875	0.2970	7.544	0.2340	5.944	0.0050	0.127
KRP04A	0.2500	6.350	0.7500	19.050	0.2810	7.137	0.2190	5.563	0.0050	0.127
KRP05A	0.3125	7.938	0.8125	20.638	0.2970	7.544	0.2340	5.944	0.0150	0.381
KRP06A	0.3750	9.525	0.8750	22.225	0.3130	7.950	0.2500	6.350	0.0150	0.381
KRP08A	0.5000	12.700	1.1250	28.575	0.3750	9.525	0.3130	7.950	0.0150	0.381
KRP10A	0.6250	15.875	1.3750	34.925	0.4060	10.312	0.3440	8.738	0.0150	0.381
KRP12A	0.7500	19.050	1.6250	41.275	0.4370	11.100	0.3750	9.525	0.0150	0.381
KRP16A	1.0000	25.400	2.0000	50.800	0.5000	12.700	0.4380	11.125	0.0150	0.381
KRP20A	1.2500	31.750	2.2500	57.150	0.5000	12.700	0.4380	11.125	0.0150	0.381

Bearing Numbers	A		C / 45 Deg Chamfer		Radial Static Limit Load (See Notes 1 & 2)		Axial Static Limit Load		Weight	
	Thrust Ring Dia (Ref)		+0.0150 –0.0000	+0.381 –0.000						
	Inch	mm	Inch	mm	lbs	kN	lbs	kN	lbs	g
KRP03A	0.3500	8.890	0.0160	0.406	2275	10.1	2035	9.1	0.02	9.1
KRP04A	0.4100	10.414	0.0160	0.406	2400	10.7	2290	10.2	0.03	13.6
KRP05A	0.4700	11.938	0.0160	0.406	3055	13.6	2940	13.1	0.03	13.6
KRP06A	0.5400	13.716	0.0160	0.406	4210	18.7	3460	15.4	0.04	18.1
KRP08A	0.6600	16.764	0.0160	0.406	7720	34.3	4370	19.4	0.08	36.3
KRP10A	0.7900	20.066	0.0320	0.813	11300	50.3	5350	23.8	0.12	54.4
KRP12A	0.9200	23.368	0.0320	0.813	14950	66.5	6255	27.8	0.19	86.2
KRP16A	1.2400	31.496	0.0320	0.813	24990	111.2	8440	37.5	0.31	140.6
KRP20A	1.4800	37.592	0.0320	0.813	29820	132.7	10320	45.9	0.36	163.3

NOTES

1. Load ratings shown are based on KAron V liner system.
2. Loads shown are based on liner capacity only.

Schematic Drawing

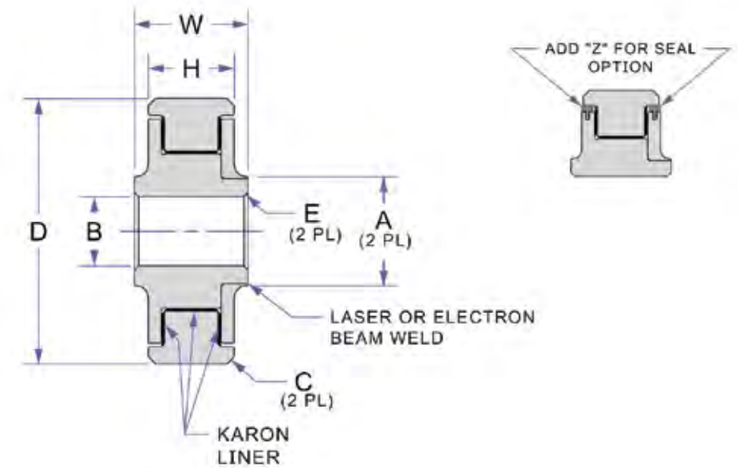

KRP ( ) A Series / AS27641

Designation

KRP ( ) A Series
Number of Standard

KRP
KAron Bearing Prefix

-06
.3750 Stud Diameter
(Diameter in 1/16 increments)

A
Narrow Airframe/ Pivot Bearing

V
KAron V Liner

Z
Add "Z" for Seal Option

P
Add "P" for OD Cadmium Plate Option
(per AMS-QQ-P-416 Type II, Class 2)

Part Number Example
KRP 06 A V Z P

Bearing Materials:

Z
Add Suffix Z
To P/N for Seal Option (Acetal Resin or Nylon)

Liner
KAron V

Thrust Ring
AMS 5643 (17-4PH) Rc 40 MIN
(COND H900 Reference)

Inner Race
AMS 5643 (17-4PH) Rc 40 MIN
(COND H900 Reference)

Outer Race
AMS 5643(17-4PH) Rc 28 MIN
(COND H1150 Reference)

For all Sizes:

Radial Play
0.0015 to 0.0035 inches
0.038 to 0.089 mm

Axial Play
0.005 to 0.015 inches
0.127 to 0.381 mm

** Millimeter dimensions are for reference only. | * Permanently marked in non-functional area.*

Contact

USA: KAMATICS CORPORATION 1330 Blue Hills Avenue Bloomfield, CT 06002 USA | **Tel:** +1 860 243 9704 | **E-mail:** KSB@kaman.com
GERMANY: RWG GERMANY GmbH Medbacher Weg 1 D-91315 Höchstadt a. d. Aisch | **Tel:** +49 (91 93) 50105 100 | **E-mail:** RWG@kaman.com

Track Rollers/ Cam Followers

KRP ( ) B Series / AS27642

- Self-Lubricating
- Airframe/Pivot Bearings
- Dimensionally Equivalent to AS27642 Series

Specifications

Bearing Numbers	B / Bore Dia.		D / Roller Outer Dia.		W / Inner Race Width		H / Outer Race Width		E / 45 Deg Chamfer	
	+0.0000 –0.0010	+0.000 –0.025	+0.0000 –0.0010	+0.000 -0.025	+0.0000 –0.0050	+0.000 –0.127	+0.0000 –0.0050	+0.000 –0.127	+0.0150 –0.0000	+0.381 –0.000
	Inch	mm	Inch	mm	Inch	mm	Inch	mm	Inch	mm
KRP16B	1.0000	25.400	1.7500	44.450	0.4370	11.100	0.3750	9.525	0.0240	0.610
KRP21B	1.3130	33.350	2.0625	52.388	0.4370	11.100	0.3750	9.525	0.0240	0.610
KRP23B	1.4380	36.525	2.1875	55.563	0.4370	11.100	0.3750	9.525	0.0240	0.610
KRP25B	1.5630	39.700	2.3125	58.738	0.4370	11.100	0.3750	9.525	0.0240	0.610
KRP29B	1.8130	46.050	2.5625	65.088	0.4370	11.100	0.3750	9.525	0.0240	0.610
KRP33B	2.0630	52.400	2.8125	71.438	0.4370	11.100	0.3750	9.525	0.0240	0.610
KRP37B	2.3130	58.750	3.0625	77.788	0.4370	11.100	0.3750	9.525	0.0240	0.610
KRP47B	2.9380	74.625	3.8750	98.425	0.5310	13.487	0.4690	11.913	0.0390	0.991
KRP49B	3.0630	77.800	4.0000	101.600	0.5310	13.487	0.4690	11.913	0.0390	0.991

Bearing Numbers	A		C / 45 Deg Chamfer		Radial Static Limit Load (See Notes 1 & 2)		Axial Static Limit Load		Weight	
	Thrust Ring Dia (Ref)		+0.0150 –0.0000	+0.381 –0.000						
	Inch	mm	Inch	mm	lbs	kN	lbs	kN	lbs	g
KRP16B	1.2000	30.480	0.0240	0.610	19500	86.7	8290	36.9	0.18	81.6
KRP21B	1.5100	38.354	0.0240	0.610	24540	109.2	10625	47.3	0.23	104.3
KRP23B	1.6400	41.656	0.0240	0.610	26650	118.5	11605	51.6	0.24	108.9
KRP25B	1.7600	44.704	0.0240	0.610	28600	127.2	12510	55.6	0.26	117.9
KRP29B	2.0100	51.054	0.0240	0.610	32665	145.3	14395	64.0	0.29	131.5
KRP33B	2.2600	57.404	0.0240	0.610	36725	163.4	16280	72.4	0.33	149.7
KRP37B	2.5100	63.754	0.0240	0.610	40790	181.5	18160	80.8	0.36	163.3
KRP47B	3.1400	79.756	0.0390	0.991	55110	245.2	22910	101.9	0.73	331.1
KRP49B	3.2600	82.804	0.0390	0.991	57215	254.5	23815	105.9	0.75	340.2

NOTES

1. Load ratings shown are based on KAron V liner system.
2. Loads shown are based on liner capacity only.

Schematic Drawing

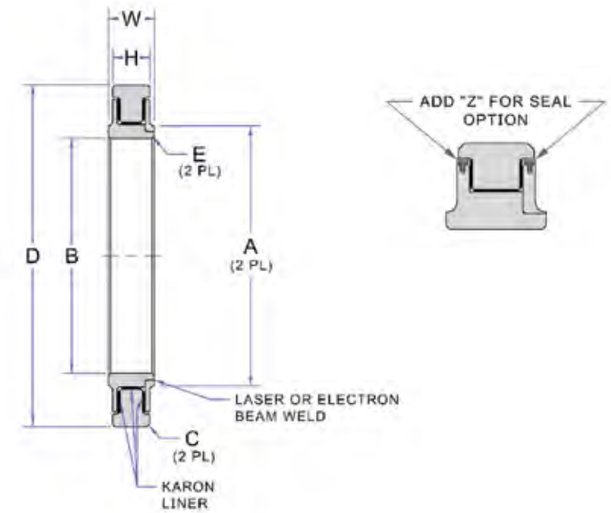

KRP ( ) B Series / AS27642

Designation

KRP ( ) B Series
Number of Standard

KRP
KAron Bearing Prefix

16
1.000 Bore Diameter
(Diameter in 1/16 increments)

B
Airframe/Pivot Bearing

V
KAron V Liner

Z
Add "Z" for Seal Option

P
Add "P" for OD Cadmium Plate Option
(per AMS-QQ-P-416 Type II, Class 2)

Part Number Example
KRP 16 B V Z P

Bearing Materials:

Z
Add Suffix Z
To P/N for Seal Option (Acetal Resin or Nylon)

Liner
KAron V

Thrust Ring
AMS 5643 (17-4PH) Rc 40 MIN
(COND H900 Reference)

Inner Race
AMS 5643 (17-4PH) Rc 40 MIN
(COND H900 Reference)

Outer Race
AMS 5643(17-4PH) Rc 28 MIN
(COND H1150 Reference)

For all Sizes:

Radial Play
0.0015 to 0.0035 inches
0.038 to 0.089 mm

Axial Play
0.005 to 0.015 inches
0.127 to 0.381 mm

** Millimeter dimensions are for reference only. | * Permanently marked in non-functional area.*

Contact

USA: KAMATICS CORPORATION 1330 Blue Hills Avenue Bloomfield, CT 06002 USA | **Tel:** +1 860 243 9704 | **E-mail:** KSB@kaman.com
GERMANY: RWG GERMANY GmbH Medbacher Weg 1 D-91315 Höchstadt a. d. Aisch | **Tel:** +49 (91 93) 50105 100 | **E-mail:** RWG@kaman.com

Track Rollers/ Cam Followers

KRP ( ) BS Series / AS27648

- Self-Lubricating
- Torque Tube
- Airframe
- Pivot Bearings
- Dimensionally Equivalent to AS27648 Series

Specifications

Bearing Numbers	B / Bore Dia.		D / Roller Outer Dia.		W / Inner Race Width		H / Outer Race Width		E / 45 Deg Chamfer	
	+0.0000 −0.0010	+0.000 −0.025	+0.0000 −0.0010	+0.000 -0.025	+0.0000 −0.0050	+0.000 −0.127	+0.0000 −0.0050	+0.000 −0.127	+0.0150 −0.0000	+0.381 −0.000
	Inch	mm	Inch	mm	Inch	mm	Inch	mm	Inch	mm
KRP16BS	1.0000	25.400	1.9375	49.213	0.4370	11.100	0.3750	9.525	0.0240	0.610
KRP21BS	1.3130	33.350	2.2500	57.150	0.4370	11.100	0.3750	9.525	0.0240	0.610
KRP23BS	1.4380	36.525	2.3750	60.325	0.4370	11.100	0.3750	9.525	0.0240	0.610
KRP25BS	1.5630	39.700	2.5000	63.500	0.4370	11.100	0.3750	9.525	0.0240	0.610
KRP29BS	1.8130	46.050	2.7500	69.850	0.4370	11.100	0.3750	9.525	0.0240	0.610
KRP33BS	2.0630	52.400	3.0000	76.200	0.4370	11.100	0.3750	9.525	0.0240	0.610
KRP37BS	2.3130	58.750	3.2500	82.550	0.4370	11.100	0.3750	9.525	0.0240	0.610
KRP47BS	2.9380	74.625	4.1250	104.775	0.5310	13.487	0.4690	11.913	0.0390	0.991
KRP48BS	3.0000	76.200	4.2500	107.950	0.5310	13.487	0.4690	11.913	0.0390	0.991
KRP49BS	3.0630	77.800	4.2500	107.950	0.5310	13.487	0.4690	11.913	0.0390	0.991

Bearing Numbers	A		C / 45 Deg Chamfer		J		Radial Static Limit Load (See Notes 1 & 2)		Axial Static Limit Load		Weight	
	Thrust Ring Dia (Ref)		+0.0150 −0.0000	+0.381 −0.000	To Sharp Corner (Ref)							
	Inch	mm	Inch	mm	Inch	mm	lbs	kN	lbs	kN	lbs	g
KRP16BS	1.2000	30.480	0.0240	0.610	1.7100	43.434	19500	86.7	8290	36.9	0.22	99.8
KRP21BS	1.5100	38.354	0.0240	0.610	2.0300	51.562	24540	109.2	10625	47.3	0.27	122.5
KRP23BS	1.6400	41.656	0.0240	0.610	2.1550	54.737	26650	118.5	11605	51.6	0.29	131.5
KRP25BS	1.7600	44.704	0.0240	0.610	2.2820	57.963	28600	127.2	12510	55.6	0.32	145.2
KRP29BS	2.0100	51.054	0.0240	0.610	2.5350	64.389	32665	145.3	14395	64.0	0.35	158.8
KRP33BS	2.2600	57.404	0.0240	0.610	2.7900	70.866	36725	163.4	16280	72.4	0.40	181.4
KRP37BS	2.5100	63.754	0.0240	0.610	3.0400	77.216	40970	182.3	18160	80.8	0.43	195.0
KRP47BS	3.1400	79.756	0.0390	0.991	3.8450	97.663	55110	245.2	22910	101.9	0.88	399.2
KRP48BS	3.2600	82.804	0.0390	0.991	3.9700	100.838	57215	254.5	23815	105.9	0.91	412.8
KRP49BS	3.3200	84.328	0.0390	0.991	3.9700	100.838	57215	254.5	23815	105.9	0.91	412.8

NOTES

1. Load ratings shown are based on KAron V liner system.
2. Loads shown are based on liner capacity only.

Schematic Drawing

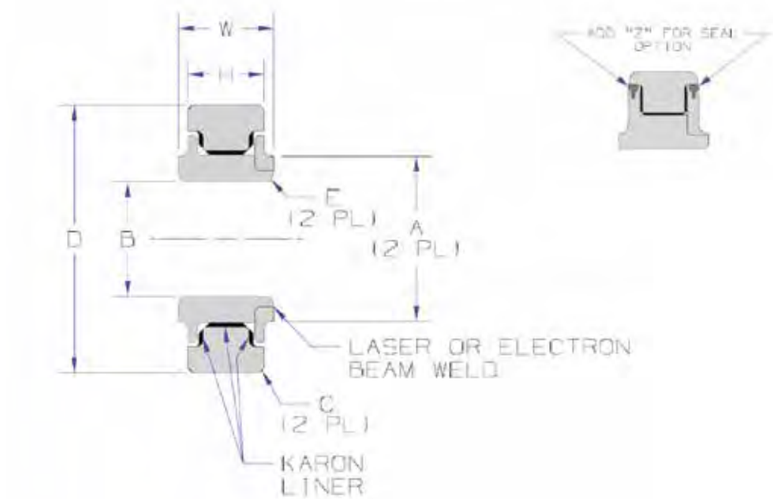

KRP ( ) BS Series / AS27648

Designation

KRP ( ) BS Series
Number of Standard

KRP
KAron Bearing Prefix

23
1.4380 Bore Diameter
(Diameter in 1/16 increments)

BS
Self-Aligning Torque Tube Bearing

V
KAron V Liner

Z
Add "Z" for Seal Option

P
Add "P" for OD Cadmium Plate Option
(per AMS-QQ-P-416 Type II, Class 2)

Part Number Example
KRP 23 BS V Z P

Bearing Materials:

Z
Add Suffix Z
To P/N for Seal Option (Acetal Resin or Nylon)

Liner
KAron V

Thrust Ring
AMS 5643 (17-4PH) Rc 40 MIN
(COND H900 Reference)

Outer Race Self-Aligning Ring
AMS 5643 (17-4PH) Rc 28 MIN
(COND H1150 Reference)

Inner Race
AMS 5643 (17-4PH) Rc 40 MIN
(COND H900 Reference)

Outer Race
AMS 5643(17-4PH) Rc 40 MIN
(COND H900 Reference)

For all Sizes:

Radial Play
0.0015 to 0.0035 inches
0.038 to 0.089 mm

Axial Play
0.005 to 0.015 inches
0.127 to 0.381 mm

** Millimeter dimensions are for reference only. | * Permanently marked in non-functional area.*

Contact

USA: KAMATICS CORPORATION 1330 Blue Hills Avenue Bloomfield, CT 06002 USA | **Tel:** +1 860 243 9704 | **E-mail:** KSB@kaman.com
GERMANY: RWG GERMANY GmbH Medbacher Weg 1 D-91315 Höchstadt a. d. Aisch | **Tel:** +49 (91 93) 50105 100 | **E-mail:** RWG@kaman.com

Track Rollers/ Cam Followers

KRP ( ) P Series / AS27644

- KAron Lined
- Self-Lubricating
- Wide Airframe/Pivot Bearings
- Dimensionally Equivalent to AS27644 Series

Schematic Drawing

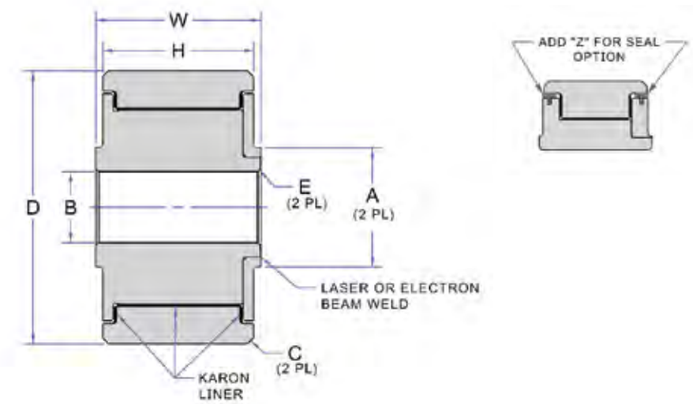

Specifications

Bearing Numbers	B / Bore Dia.		D / Roller Outer Dia.		W / Inner Race Width		H / Outer Race Width		E / 45 Deg Chamfer	
	+0.0000 –0.0005	+0.000 –0.013	+0.0000 –0.0005	+0.000 -0.013	+0.0000 –0.0050	+0.000 –0.127	+0.0000 –0.0050	+0.000 –0.127	+0.0150 –0.0000	+0.381 –0.000
	Inch	mm	Inch	mm	Inch	mm	Inch	mm	Inch	mm
KRP03P	0.1900	4.826	0.7774	19.746	0.4950	12.573	0.4730	12.014	0.0050	0.127
KRP04P	0.2500	6.350	0.9014	22.896	0.6200	15.748	0.4910	12.471	0.0050	0.127
KRP05P	0.3125	7.938	1.2500	31.750	0.7450	18.923	0.6870	17.450	0.0150	0.381
KRP06P	0.3750	9.525	1.4375	36.513	0.8700	22.098	0.7940	20.168	0.0150	0.381
KRP08P	0.5000	12.700	1.6875	42.863	0.9320	23.673	0.8560	21.742	0.0150	0.381
KRP10P	0.6250	15.875	1.9375	49.213	0.9950	25.273	0.9200	23.368	0.0150	0.381

Bearing Numbers	A		C / 45 Deg Chamfer		Radial Static Limit Load (See Notes 1 & 2)		Axial Static Limit Load		Weight	
	Thrust Ring Dia (Ref)		+0.0150 –0.0000	+0.381 –0.000						
	Inch	mm	Inch	mm	lbs	kN	lbs	kN	lbs	g
KRP03P	0.3500	8.890	0.0180	0.457	6825	30.4	2025	9.0	0.06	27.2
KRP04P	0.4100	10.414	0.0320	0.813	9330	41.5	2500	11.1	0.09	40.8
KRP05P	0.5000	12.700	0.0320	0.813	16380	72.9	3240	14.4	0.24	108.9
KRP06P	0.6250	15.875	0.0320	0.813	26800	119.2	3770	16.8	0.35	158.8
KRP08P	0.7350	18.669	0.0440	1.118	42250	187.9	4675	20.8	0.55	249.5
KRP10P	0.8900	22.606	0.0440	1.118	58500	260.2	5650	25.1	0.75	340.2

NOTES

1. Load ratings shown are based on KAron V liner system.
2. Loads shown are based on liner capacity only.

KRP ( ) P Series / AS27644

Designation

KRP ( ) P Series
Number of Standard

KRP
KAron Bearing Prefix

-06
.3750 Bore Diameter
(Diameter in 1/16 increments)

P
Wide Airframe/Pivot Bearing

V
KAron V Liner

Z
Add "Z" for Seal Option

P
Add "P" for OD Cadmium Plate Option
(per AMS-QQ-P-416 Type II, Class 2)

Part Number Example
KRP 06 P V Z P

Bearing Materials:

Z
Add Suffix Z
To P/N for Seal Option (Acetal Resin or Nylon)

Liner
KAron V

Thrust Ring
AMS 5643 (17-4PH) Rc 40 MIN
(COND H900 Reference)

Inner Race
AMS 5643 (17-4PH) Rc 40 MIN
(COND H900 Reference)

Outer Race
AMS 5643(17-4PH) Rc 28 MIN
(COND H1150 Reference)

For all Sizes:

Radial Play
0.0015 to 0.0035 inches
0.038 to 0.089 mm

Axial Play
0.005 to 0.015 inches
0.127 to 0.381 mm

** Millimeter dimensions are for reference only. | * Permanently marked in non-functional area.*

Contact

USA: KAMATICS CORPORATION 1330 Blue Hills Avenue Bloomfield, CT 06002 USA | **Tel:** +1 860 243 9704 | **E-mail:** KSB@kaman.com
GERMANY: RWG GERMANY GmbH Medbacher Weg 1 D-91315 Höchstadt a. d. Aisch | **Tel:** +49 (91 93) 50105 100 | **E-mail:** RWG@kaman.com

Track Rollers/ Cam Followers

KRP ( ) B500 Series / AS27646

- Self-Lubricating
- Narrow Airframe
- Pivot Bearings
- Dimensionally Equivalent to AS27646 Series

Specifications

Bearing Numbers	B / Bore Dia.		D / Roller Outer Dia.		W / Inner Race Width		H / Outer Race Width	
	+0.0000 −0.0007	+0.000 −0.018	+0.0000 −0.0010	+0.000 -0.025	+0.0000 −0.0050	+0.000 −0.127	+0.0000 −0.0050	+0.000 −0.127
	Inch	mm	Inch	mm	Inch	mm	Inch	mm
KRPB538	0.6250	15.875	1.0625	26.988	0.2810	7.137	0.2500	6.350
KRPB539	0.7500	19.050	1.1875	30.163	0.2810	7.137	0.2500	6.350
KRPB540	0.8750	22.225	1.3125	33.338	0.2810	7.137	0.2500	6.350
KRPB541	1.0625	26.988	1.5000	38.100	0.2810	7.137	0.2500	6.350
KRPB542	1.3125	33.338	1.7500	44.450	0.2810	7.137	0.2500	6.350
KRPB543	1.5625	39.688	2.0000	50.800	0.2810	7.137	0.2500	6.350
KRPB544	1.8135 / 1.8115	46.063 / 46.012	2.2500 / 2.2485	57.150 / 57.112	0.2810	7.137	0.2500	6.350
KRPB545	2.0635 / 2.0615	52.413 / 52.362	2.6250 / 2.6235	66.675 / 66.637	0.2810	7.137	0.2500	6.350
KRPB546	2.3135 / 2.3115	58.763 / 58.712	2.8750 / 2.8735	73.025 / 72.987	0.2810	7.137	0.2500	6.350

Bearing Numbers	E / 45 Deg Chamfer		A		C / 45 Deg Chamfer		Radial Static Limit Load (See Notes 1 & 2)		Axial Static Limit Load		Weight	
	+0.0200 −0.0000	+0.508 −0.000	Thrust Ring Dia (Ref)		+0.0200 −0.0000	+0.508 −0.000						
	Inch	mm	Inch	mm	Inch	mm	lbs	kN	lbs	kN	lbs	g
KRPB538	0.0150	0.381	0.8000	20.320	0.0150	0.381	6240	27.8	5275	23.5	0.04	18.1
KRPB539	0.0150	0.381	0.9100	23.114	0.0150	0.381	7020	31.2	6030	26.8	0.05	22.7
KRPB540	0.0150	0.381	1.0400	26.416	0.0150	0.381	8110	36.1	7235	32.2	0.06	27.2
KRPB541	0.0150	0.381	1.2200	30.988	0.0150	0.381	9515	42.3	8590	38.2	0.07	31.8
KRPB542	0.0150	0.381	1.4700	37.338	0.0150	0.381	11460	51.0	10475	46.6	0.08	36.3
KRPB543	0.0150	0.381	1.7200	43.688	0.0150	0.381	13415	59.7	12360	55.0	0.09	40.8
KRPB544	0.0150	0.381	1.9700	50.038	0.0150	0.381	15360	68.3	14240	63.3	0.10	45.4
KRPB545	0.0150	0.381	2.2800	57.912	0.0150	0.381	17940	79.8	16425	73.1	0.16	72.6
KRPB546	0.0150	0.381	2.5500	64.770	0.0150	0.381	19890	88.5	18310	81.5	0.17	77.1

NOTES

1. Load ratings shown are based on KAron V liner system.
2. Loads shown are based on liner capacity only.

Schematic Drawing

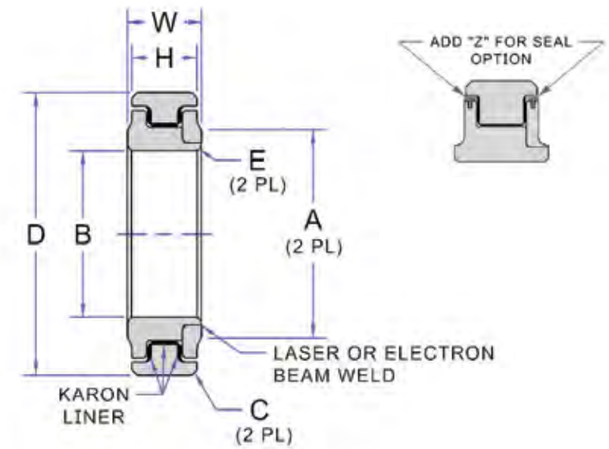

KRP ( ) B500 Series / AS27646

Designation

KRP ( ) 500 Series
Number of Standard

KRP
KAron Bearing Prefix

540
.875 Bore Diameter
(Diameter in 1/16 increments)

V
KAron V Liner

Z
Add "Z" for Seal Option

P
Add "P" for OD Cadmium Plate Option
(per AMS-QQ-P-416 Type II, Class 2)

Part Number Example
KRPB 540 V Z P

Bearing Materials:

Z
Add Suffix Z
To P/N for Seal Option (Acetal Resin or Nylon)

Liner
KAron V

Thrust Ring
AMS 5643 (17-4PH) Rc 40 MIN
(COND H900 Reference)

Inner Race
AMS 5643 (17-4PH) Rc 40 MIN
(COND H900 Reference)

Outer Race
AMS 5643(17-4PH) Rc 28 MIN
(COND H1150 Reference)

For all Sizes:

Radial Play
0.0015 to 0.0035 inches
0.038 to 0.089 mm

Axial Play
0.005 to 0.015 inches
0.127 to 0.381 mm

** Millimeter dimensions are for reference only. | * Permanently marked in non-functional area.*

Contact

USA: KAMATICS CORPORATION 1330 Blue Hills Avenue Bloomfield, CT 06002 USA | **Tel:** +1 860 243 9704 | **E-mail:** KSB@kaman.com
GERMANY: RWG GERMANY GmbH Medbacher Weg 1 D-91315 Höchstadt a. d. Aisch | **Tel:** +49 (91 93) 50105 100 | **E-mail:** RWG@kaman.com

Journal Bearings

PRODUCT OVERVIEW

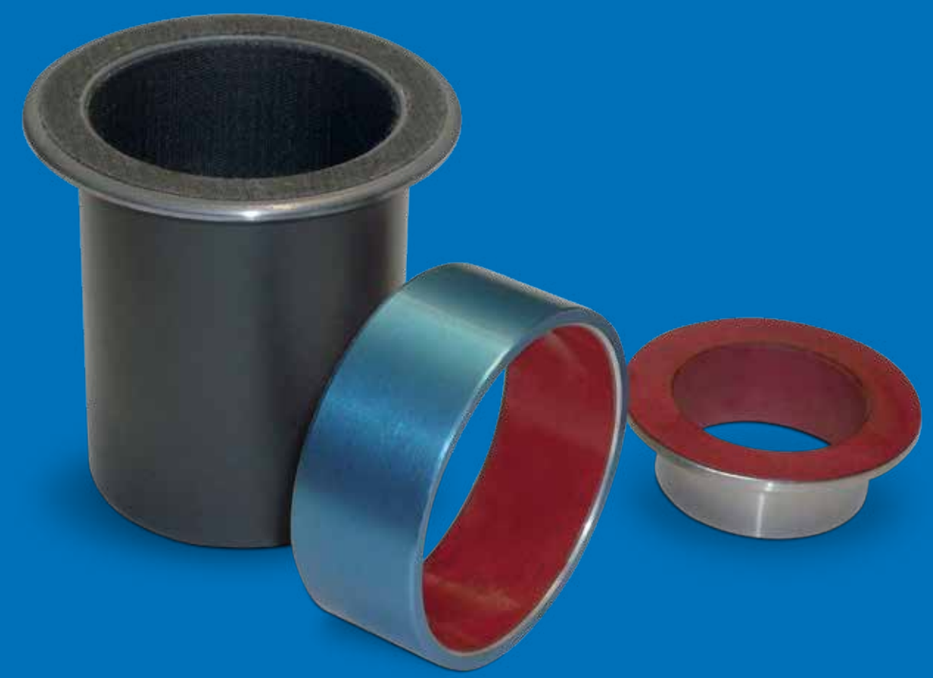

KAMATICS·RWG

Journal Bearings

PRODUCT OVERVIEW

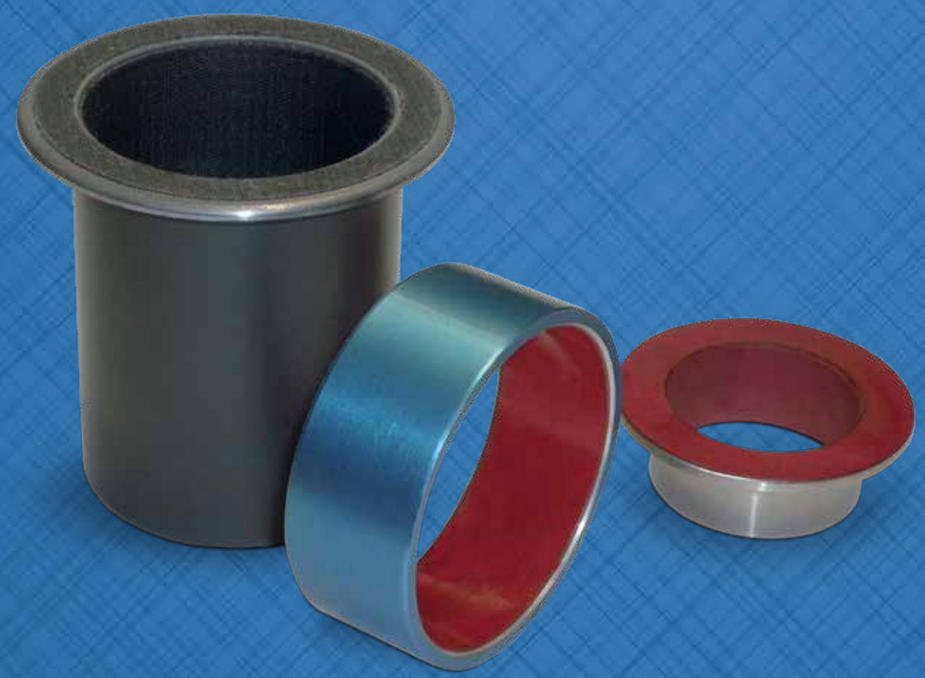

Table of Contents

PRODUCT	PAGE
Fraslip Fabric Liner	
ABS2041	264-267
ABS2043	268-271
EN4534	272-275
EN4536	276-279
FBPA...A... / FBPA...C...	280-283
FBPA1 / FBPA2	284-285
EN2285	286-289
EN2287	290-293
ABS2042...D	294-297
ABS2042...F	298-301
ABS2044...D	302-305
ABS2044...F	306-309
EN4535 2D	310-313
EN4535 2F	314-317
EN4537 2D	318-321
EN4537 2F	322-325
FBFA...A... / FBFA...C...	326-329
FBFA1 / FBFA2	330-333
NSA8147 / NSA8148	334-337
EN2288	338-341
EN2286	342-345
KAron Molded Liner	
KRJ / AS81934	346-349
KRJ-U / AS81934	350-353

Journal Bearings

ABS2041

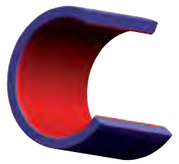

- Self-Lubricating
- Aluminium
- Cylindrical Type
- For Titanium Shaft
- According to Specification ABS2045 / EN2311

Specifications

Diameter Code	Nominal Diameter		d		D		Length L -0.25 mm / -0.0098 Inch							
			-0.025	-0.0010	±0.013	±0.0005	005		006		007		008	
	mm	Inch	mm	Inch	mm	Inch	mm	Inch	mm	Inch	mm	Inch	mm	Inch
04	6.350	0.2500	6.388	0.2515	9.550	0.3760	3.970	0.1563	4.780	0.1882	5.560	0.2189	6.350	0.2500
05	7.938	0.3125	7.976	0.3140	11.140	0.4386	3.970	0.1563	4.780	0.1882	5.560	0.2189	6.350	0.2500
06	9.525	0.3750	9.563	0.3765	12.730	0.5012	3.970	0.1563	4.780	0.1882	5.560	0.2189	6.350	0.2500
07	11.113	0.4375	11.151	0.4390	14.321	0.5638	3.970	0.1563	4.780	0.1882	5.560	0.2189	6.350	0.2500
08	12.700	0.5000	12.738	0.5015	15.913	0.6265	3.970	0.1563	4.780	0.1882	5.560	0.2189	6.350	0.2500
09	14.288	0.5625	14.326	0.5640	17.506	0.6892	3.970	0.1563	4.780	0.1882	5.560	0.2189	6.350	0.2500
10	15.875	0.6250	15.913	0.6265	20.681	0.8142	3.970	0.1563	4.780	0.1882	5.560	0.2189	6.350	0.2500
11	17.463	0.6875	17.501	0.6890	22.268	0.8767	-	-	-	-	-	-	6.350	0.2500
12	19.050	0.7500	19.088	0.7515	23.858	0.9393	-	-	-	-	-	-	6.350	0.2500
14	22.225	0.8750	22.263	0.8765	27.038	1.0645	-	-	-	-	-	-	6.350	0.2500
16	25.400	1.0000	25.438	1.0015	30.221	1.1898	-	-	-	-	-	-	6.350	0.2500
18	28.575	1.1250	28.613	1.1265	33.396	1.3148	-	-	-	-	-	-	-	-
20	31.750	1.2500	31.788	1.2515	36.571	1.4398	-	-	-	-	-	-	-	-
22	34.925	1.3750	34.963	1.3765	39.746	1.5648	-	-	-	-	-	-	-	-
24	38.100	1.5000	38.138	1.5015	44.508	1.7523	-	-	-	-	-	-	-	-
26	41.275	1.6250	41.313	1.6265	47.683	1.8773	-	-	-	-	-	-	-	-
28	44.450	1.7500	44.488	1.7515	50.858	2.0023	-	-	-	-	-	-	-	-
32	50.800	2.0000	50.838	2.0015	57.208	2.2523	-	-	-	-	-	-	-	-

NOTES

Static Limit Load C_s:

$C_s = 0.29 \cdot d \cdot (L - 2)$ [kN]

Schematic Drawing

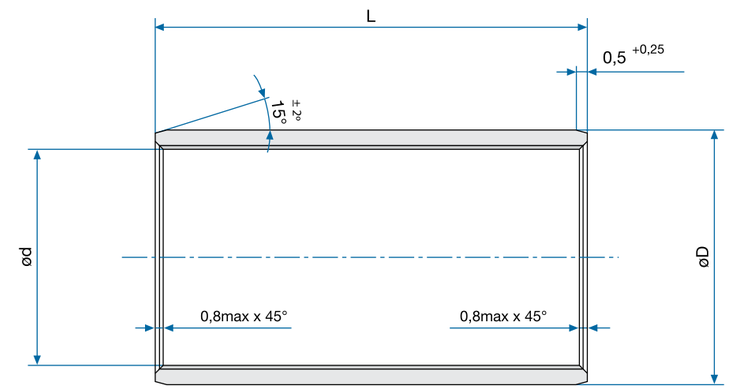

Specifications

ABS2041

Diameter Code	Length L -0.25 mm / -0.0098 Inch													
	009		010		011		012		014		016		018	
	mm	Inch	mm	Inch	mm	Inch	mm	Inch	mm	Inch	mm	Inch	mm	Inch
04	7.140	0.2811	7.950	0.3130	8.740	0.3441	9.530	0.3752	11.130	0.4382	-	-	-	-
05	7.140	0.2811	7.950	0.3130	8.740	0.3441	9.530	0.3752	11.130	0.4382	12.700	0.5000	14.300	0.5630
06	7.140	0.2811	7.950	0.3130	8.740	0.3441	9.530	0.3752	11.130	0.4382	12.700	0.5000	14.300	0.5630
07	7.140	0.2811	7.950	0.3130	8.740	0.3441	9.530	0.3752	11.130	0.4382	12.700	0.5000	14.300	0.5630
08	7.140	0.2811	7.950	0.3130	8.740	0.3441	9.530	0.3752	11.130	0.4382	12.700	0.5000	14.300	0.5630
09	7.140	0.2811	7.950	0.3130	8.740	0.3441	9.530	0.3752	11.130	0.4382	12.700	0.5000	14.300	0.5630
10	7.140	0.2811	7.950	0.3130	8.740	0.3441	9.530	0.3752	11.130	0.4382	12.700	0.5000	14.300	0.5630
11	7.140	0.2811	7.950	0.3130	8.740	0.3441	9.530	0.3752	11.130	0.4382	12.700	0.5000	14.300	0.5630
12	7.140	0.2811	7.950	0.3130	8.740	0.3441	9.530	0.3752	11.130	0.4382	12.700	0.5000	14.300	0.5630
14	7.140	0.2811	7.950	0.3130	8.740	0.3441	9.530	0.3752	11.130	0.4382	12.700	0.5000	14.300	0.5630
16	7.140	0.2811	7.950	0.3130	8.740	0.3441	9.530	0.3752	11.130	0.4382	12.700	0.5000	14.300	0.5630
18	-	-	7.950	0.3130	8.740	0.3441	9.530	0.3752	11.130	0.4382	12.700	0.5000	14.300	0.5630
20	-	-	-	-	-	-	9.530	0.3752	11.130	0.4382	12.700	0.5000	14.300	0.5630
22	-	-	-	-	-	-	9.530	0.3752	11.130	0.4382	12.700	0.5000	14.300	0.5630
24	-	-	-	-	-	-	9.530	0.3752	11.130	0.4382	12.700	0.5000	14.300	0.5630
26	-	-	-	-	-	-	-	-	-	-	12.700	0.5000	14.300	0.5630
28	-	-	-	-	-	-	-	-	-	-	12.700	0.5000	14.300	0.5630
32	-	-	-	-	-	-	-	-	-	-	12.700	0.5000	14.300	0.5630

ABS2041 continued on pg 266 ►

Specifications

ABS2041

Diameter Code	Length L -0.25 mm / -0.0098 Inch													
	020		022		024		028		032		036		040	
	mm	Inch	mm	Inch	mm	Inch	mm	Inch	mm	Inch	mm	Inch	mm	Inch
04	-	-	-	-	-	-	-	-	-	-	-	-	-	-
05	-	-	-	-	-	-	-	-	-	-	-	-	-	-
06	15.880	0.6252	17.480	0.6882	-	-	-	-	-	-	-	-	-	-
07	15.880	0.6252	17.480	0.6882	19.050	0.7500	22.230	0.8752	-	-	-	-	-	-
08	15.880	0.6252	17.480	0.6882	19.050	0.7500	22.230	0.8752	-	-	-	-	-	-
09	15.880	0.6252	17.480	0.6882	19.050	0.7500	22.230	0.8752	25.400	1.0000	28.580	1.1252	-	-
10	15.880	0.6252	17.480	0.6882	19.050	0.7500	22.230	0.8752	25.400	1.0000	28.580	1.1252	-	-
11	15.880	0.6252	17.480	0.6882	19.050	0.7500	22.230	0.8752	25.400	1.0000	28.580	1.1252	31.750	1.2500
12	15.880	0.6252	17.480	0.6882	19.050	0.7500	22.230	0.8752	25.400	1.0000	28.580	1.1252	31.750	1.2500
14	15.880	0.6252	17.480	0.6882	19.050	0.7500	22.230	0.8752	25.400	1.0000	28.580	1.1252	31.750	1.2500
16	15.880	0.6252	17.480	0.6882	19.050	0.7500	22.230	0.8752	25.400	1.0000	28.580	1.1252	31.750	1.2500
18	15.880	0.6252	17.480	0.6882	19.050	0.7500	22.230	0.8752	25.400	1.0000	28.580	1.1252	31.750	1.2500
20	15.880	0.6252	17.480	0.6882	19.050	0.7500	22.230	0.8752	25.400	1.0000	28.580	1.1252	31.750	1.2500
22	15.880	0.6252	17.480	0.6882	19.050	0.7500	22.230	0.8752	25.400	1.0000	28.580	1.1252	31.750	1.2500
24	15.880	0.6252	17.480	0.6882	19.050	0.7500	22.230	0.8752	25.400	1.0000	28.580	1.1252	31.750	1.2500
26	15.880	0.6252	17.480	0.6882	19.050	0.7500	22.230	0.8752	25.400	1.0000	28.580	1.1252	31.750	1.2500
28	15.880	0.6252	17.480	0.6882	19.050	0.7500	22.230	0.8752	25.400	1.0000	28.580	1.1252	31.750	1.2500
32	15.880	0.6252	17.480	0.6882	19.050	0.7500	22.230	0.8752	25.400	1.0000	28.580	1.1252	31.750	1.2500

Designation

ABS2041A
Number of Standard

04
Diameter Code

005
Length Code

Part Number Example
ABS2041A 04 005

Bearing Materials:

Material
EN2318 / 3.1354 T3511 / Alloy 2024; Anodized

Liner
FRASLIP F per EN2311 / SAE AS81934

Technical Specification
ABS2045

** Inch dimensions are for reference only. | * Permanently marked in non-functional area.*

Specifications

ABS2041

Diameter Code	Length L -0.25 mm / -0.0098 Inch											
	044		048		052		056		060		064	
	mm	Inch	mm	Inch	mm	Inch	mm	Inch	mm	Inch	mm	Inch
04	-	-	-	-	-	-	-	-	-	-	-	-
05	-	-	-	-	-	-	-	-	-	-	-	-
06	-	-	-	-	-	-	-	-	-	-	-	-
07	-	-	-	-	-	-	-	-	-	-	-	-
08	-	-	-	-	-	-	-	-	-	-	-	-
09	-	-	-	-	-	-	-	-	-	-	-	-
10	-	-	-	-	-	-	-	-	-	-	-	-
11	-	-	-	-	-	-	-	-	-	-	-	-
12	34.930	1.3752	-	-	-	-	-	-	-	-	-	-
14	34.930	1.3752	38.100	1.5000	41.280	1.6252	-	-	-	-	-	-
16	34.930	1.3752	38.100	1.5000	41.280	1.6252	44.450	1.7500	47.630	1.8752	-	-
18	34.930	1.3752	38.100	1.5000	41.280	1.6252	44.450	1.7500	47.630	1.8752	-	-
20	34.930	1.3752	38.100	1.5000	41.280	1.6252	44.450	1.7500	47.630	1.8752	50.800	2.0000
22	34.930	1.3752	38.100	1.5000	41.280	1.6252	44.450	1.7500	47.630	1.8752	50.800	2.0000
24	34.930	1.3752	38.100	1.5000	41.280	1.6252	44.450	1.7500	47.630	1.8752	50.800	2.0000
26	34.930	1.3752	38.100	1.5000	41.280	1.6252	44.450	1.7500	47.630	1.8752	50.800	2.0000
28	34.930	1.3752	38.100	1.5000	41.280	1.6252	44.450	1.7500	47.630	1.8752	50.800	2.0000
32	34.930	1.3752	38.100	1.5000	41.280	1.6252	44.450	1.7500	47.630	1.8752	50.800	2.0000

Diameter Code	Length L -0.25 mm / -0.0098 Inch											
	068		072		076		080		088		096	
	mm	Inch	mm	Inch	mm	Inch	mm	Inch	mm	Inch	mm	Inch
04	-	-	-	-	-	-	-	-	-	-	-	-
05	-	-	-	-	-	-	-	-	-	-	-	-
06	-	-	-	-	-	-	-	-	-	-	-	-
07	-	-	-	-	-	-	-	-	-	-	-	-
08	-	-	-	-	-	-	-	-	-	-	-	-
09	-	-	-	-	-	-	-	-	-	-	-	-
10	-	-	-	-	-	-	-	-	-	-	-	-
11	-	-	-	-	-	-	-	-	-	-	-	-
12	-	-	-	-	-	-	-	-	-	-	-	-
14	-	-	-	-	-	-	-	-	-	-	-	-
16	-	-	-	-	-	-	-	-	-	-	-	-
18	-	-	-	-	-	-	-	-	-	-	-	-
20	53.980	2.1252	-	-	-	-	-	-	-	-	-	-
22	53.980	2.1252	-	-	-	-	-	-	-	-	-	-
24	53.980	2.1252	57.150	2.2500	60.330	2.3752	63.500	2.5000	69.850	2.7500	-	-
26	53.980	2.1252	57.150	2.2500	60.330	2.3752	63.500	2.5000	69.850	2.7500	76.200	3.0000
28	53.980	2.1252	57.150	2.2500	60.330	2.3752	63.500	2.5000	69.850	2.7500	76.200	3.0000
32	53.980	2.1252	57.150	2.2500	60.330	2.3752	63.500	2.5000	69.850	2.7500	76.200	3.0000

Contact

USA: KAMATICS CORPORATION 1330 Blue Hills Avenue Bloomfield, CT 06002 USA | **Tel:** +1 860 243 9704 | **E-mail:** KSB@kaman.com
GERMANY: RWG GERMANY GmbH Medbacher Weg 1 D-91315 Höchstadt a. d. Aisch | **Tel:** +49 (91 93) 50105 100 | **E-mail:** RWG@kaman.com

Journal Bearings

ABS2043

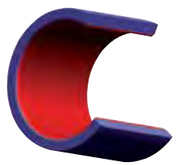

- Self-Lubricating
- CRES
- Cylindrical Type
- For Titanium Shafts
- According to Specification ABS2045 / EN2311

Schematic Drawing

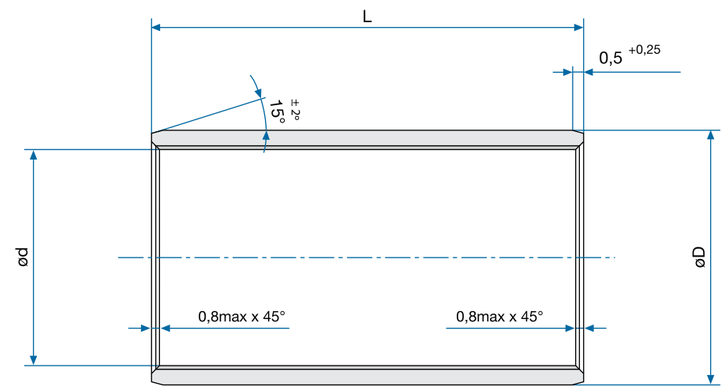

Specifications

Diameter Code	Nominal Diameter		d		D		Length L -0.25 mm / -0.0098 Inch							
			-0.025	-0.0010	-0.013	-0.0005	005		006		007		008	
	mm	Inch	mm	Inch	mm	Inch	mm	Inch	mm	Inch	mm	Inch	mm	Inch
04	6.350	0.2500	6.388	0.2515	9.550	0.3760	3.970	0.1563	4.780	0.1882	5.560	0.2189	6.350	0.2500
05	7.938	0.3125	7.976	0.3140	11.140	0.4386	3.970	0.1563	4.780	0.1882	5.560	0.2189	6.350	0.2500
06	9.525	0.3750	9.563	0.3765	12.730	0.5012	3.970	0.1563	4.780	0.1882	5.560	0.2189	6.350	0.2500
07	11.113	0.4375	11.151	0.4390	14.321	0.5638	3.970	0.1563	4.780	0.1882	5.560	0.2189	6.350	0.2500
08	12.700	0.5000	12.738	0.5015	15.913	0.6265	3.970	0.1563	4.780	0.1882	5.560	0.2189	6.350	0.2500
09	14.288	0.5625	14.326	0.5640	17.506	0.6892	3.970	0.1563	4.780	0.1882	5.560	0.2189	6.350	0.2500
10	15.875	0.6250	15.913	0.6265	20.681	0.8142	3.970	0.1563	4.780	0.1882	5.560	0.2189	6.350	0.2500
11	17.463	0.6875	17.501	0.6890	22.268	0.8767	-	-	-	-	-	-	6.350	0.2500
12	19.050	0.7500	19.088	0.7515	23.858	0.9393	-	-	-	-	-	-	6.350	0.2500
14	22.225	0.8750	22.263	0.8765	27.038	1.0645	-	-	-	-	-	-	6.350	0.2500
16	25.400	1.0000	25.438	1.0015	30.221	1.1898	-	-	-	-	-	-	6.350	0.2500
18	28.575	1.1250	28.613	1.1265	33.396	1.3148	-	-	-	-	-	-	-	-
20	31.750	1.2500	31.788	1.2515	36.571	1.4398	-	-	-	-	-	-	-	-
22	34.925	1.3750	34.963	1.3765	39.746	1.5648	-	-	-	-	-	-	-	-
24	38.100	1.5000	38.138	1.5015	44.508	1.7523	-	-	-	-	-	-	-	-
26	41.275	1.6250	41.313	1.6265	47.683	1.8773	-	-	-	-	-	-	-	-
28	44.450	1.7500	44.488	1.7515	50.858	2.0023	-	-	-	-	-	-	-	-
32	50.800	2.0000	50.838	2.0015	57.208	2.2523	-	-	-	-	-	-	-	-

NOTES

Static Limit Load C_s:

$C_s = 0.541 \cdot d \cdot (L - 2)$ [kN]

Specifications

ABS2043

Diameter Code	Length L -0.25 mm / -0.0098 Inch													
	009		010		011		012		014		016		018	
	mm	Inch	mm	Inch	mm	Inch	mm	Inch	mm	Inch	mm	Inch	mm	Inch
04	7.140	0.2811	7.950	0.3130	8.740	0.3441	9.530	0.3752	11.130	0.4382	-	-	-	-
05	7.140	0.2811	7.950	0.3130	8.740	0.3441	9.530	0.3752	11.130	0.4382	12.700	0.5000	-	-
06	7.140	0.2811	7.950	0.3130	8.740	0.3441	9.530	0.3752	11.130	0.4382	12.700	0.5000	14.300	0.5630
07	7.140	0.2811	7.950	0.3130	8.740	0.3441	9.530	0.3752	11.130	0.4382	12.700	0.5000	14.300	0.5630
08	7.140	0.2811	7.950	0.3130	8.740	0.3441	9.530	0.3752	11.130	0.4382	12.700	0.5000	14.300	0.5630
09	7.140	0.2811	7.950	0.3130	8.740	0.3441	9.530	0.3752	11.130	0.4382	12.700	0.5000	14.300	0.5630
10	7.140	0.2811	7.950	0.3130	8.740	0.3441	9.530	0.3752	11.130	0.4382	12.700	0.5000	14.300	0.5630
11	7.140	0.2811	7.950	0.3130	8.740	0.3441	9.530	0.3752	11.130	0.4382	12.700	0.5000	14.300	0.5630
12	7.140	0.2811	7.950	0.3130	8.740	0.3441	9.530	0.3752	11.130	0.4382	12.700	0.5000	14.300	0.5630
14	7.140	0.2811	7.950	0.3130	8.740	0.3441	9.530	0.3752	11.130	0.4382	12.700	0.5000	14.300	0.5630
16	7.140	0.2811	7.950	0.3130	8.740	0.3441	9.530	0.3752	11.130	0.4382	12.700	0.5000	14.300	0.5630
18	-	-	7.950	0.3130	8.740	0.3441	9.530	0.3752	11.130	0.4382	12.700	0.5000	14.300	0.5630
20	-	-	-	-	-	-	9.530	0.3752	11.130	0.4382	12.700	0.5000	14.300	0.5630
22	-	-	-	-	-	-	9.530	0.3752	11.130	0.4382	12.700	0.5000	14.300	0.5630
24	-	-	-	-	-	-	9.530	0.3752	11.130	0.4382	12.700	0.5000	14.300	0.5630
26	-	-	-	-	-	-	-	-	-	-	12.700	0.5000	14.300	0.5630
28	-	-	-	-	-	-	-	-	-	-	12.700	0.5000	14.300	0.5630
32	-	-	-	-	-	-	-	-	-	-	12.700	0.5000	14.300	0.5630

ABS2043 continued on pg 270. ►

Specifications

ABS2043

Diameter Code	Length L -0.25 mm / -0.0098 Inch													
	020		022		024		028		032		036		040	
	mm	Inch	mm	Inch	mm	Inch	mm	Inch	mm	Inch	mm	Inch	mm	Inch
04	-	-	-	-	-	-	-	-	-	-	-	-	-	-
05	-	-	-	-	-	-	-	-	-	-	-	-	-	-
06	-	-	-	-	-	-	-	-	-	-	-	-	-	-
07	15.880	0.6252	17.480	0.6882	19.050	0.7500	-	-	-	-	-	-	-	-
08	15.880	0.6252	17.480	0.6882	19.050	0.7500	-	-	-	-	-	-	-	-
09	15.880	0.6252	17.480	0.6882	19.050	0.7500	-	-	-	-	-	-	-	-
10	15.880	0.6252	17.480	0.6882	19.050	0.7500	22.230	0.8752	-	-	-	-	-	-
11	15.880	0.6252	17.480	0.6882	19.050	0.7500	22.230	0.8752	25.400	1.0000	-	-	-	-
12	15.880	0.6252	17.480	0.6882	19.050	0.7500	22.230	0.8752	25.400	1.0000	-	-	-	-
14	15.880	0.6252	17.480	0.6882	19.050	0.7500	22.230	0.8752	25.400	1.0000	28.580	1.1252	31.750	1.2500
16	15.880	0.6252	17.480	0.6882	19.050	0.7500	22.230	0.8752	25.400	1.0000	28.580	1.1252	31.750	1.2500
18	15.880	0.6252	17.480	0.6882	19.050	0.7500	22.230	0.8752	25.400	1.0000	28.580	1.1252	31.750	1.2500
20	15.880	0.6252	17.480	0.6882	19.050	0.7500	22.230	0.8752	25.400	1.0000	28.580	1.1252	31.750	1.2500
22	15.880	0.6252	17.480	0.6882	19.050	0.7500	22.230	0.8752	25.400	1.0000	28.580	1.1252	31.750	1.2500
24	15.880	0.6252	17.480	0.6882	19.050	0.7500	22.230	0.8752	25.400	1.0000	28.580	1.1252	31.750	1.2500
26	15.880	0.6252	17.480	0.6882	19.050	0.7500	22.230	0.8752	25.400	1.0000	28.580	1.1252	31.750	1.2500
28	15.880	0.6252	17.480	0.6882	19.050	0.7500	22.230	0.8752	25.400	1.0000	28.580	1.1252	31.750	1.2500
32	15.880	0.6252	17.480	0.6882	19.050	0.7500	22.230	0.8752	25.400	1.0000	28.580	1.1252	31.750	1.2500

Designation

ABS2043A
Number of Standard

04
Diameter Code

005
Length Code

Part Number Example
ABS2043A 04 005

Bearing Materials:

Material
EN3161 / 1.4545 / 17-4PH
H1150

Liner
FRASLIP F per EN2311 /
SAE AS81934

Technical Specification
ABS2045

** Inch dimensions are for reference only. | * Permanently marked in non-functional area.*

Specifications

ABS2043

Diameter Code	Length L -0.25 mm / -0.0098 Inch											
	044		048		052		056		060		064	
	mm	Inch	mm	Inch	mm	Inch	mm	Inch	mm	Inch	mm	Inch
04	-	-	-	-	-	-	-	-	-	-	-	-
05	-	-	-	-	-	-	-	-	-	-	-	-
06	-	-	-	-	-	-	-	-	-	-	-	-
07	-	-	-	-	-	-	-	-	-	-	-	-
08	-	-	-	-	-	-	-	-	-	-	-	-
09	-	-	-	-	-	-	-	-	-	-	-	-
10	-	-	-	-	-	-	-	-	-	-	-	-
11	-	-	-	-	-	-	-	-	-	-	-	-
12	-	-	-	-	-	-	-	-	-	-	-	-
14	-	-	-	-	-	-	-	-	-	-	-	-
16	34.930	1.3752	-	-	-	-	-	-	-	-	-	-
18	34.930	1.3752	38.100	1.5000	-	-	-	-	-	-	-	-
20	34.930	1.3752	38.100	1.5000	41.280	1.6252	44.450	1.7500	-	-	-	-
22	34.930	1.3752	38.100	1.5000	41.280	1.6252	44.450	1.7500	47.630	1.8752	-	-
24	34.930	1.3752	38.100	1.5000	41.280	1.6252	44.450	1.7500	47.630	1.8752	50.800	2.0000
26	34.930	1.3752	38.100	1.5000	41.280	1.6252	44.450	1.7500	47.630	1.8752	50.800	2.0000
28	34.930	1.3752	38.100	1.5000	41.280	1.6252	44.450	1.7500	47.630	1.8752	50.800	2.0000
32	34.930	1.3752	38.100	1.5000	41.280	1.6252	44.450	1.7500	47.630	1.8752	50.800	2.0000

Diameter Code	Length L -0.25 mm / -0.0098 Inch											
	068		072		076		080		088		096	
	mm	Inch	mm	Inch	mm	Inch	mm	Inch	mm	Inch	mm	Inch
04	-	-	-	-	-	-	-	-	-	-	-	-
05	-	-	-	-	-	-	-	-	-	-	-	-
06	-	-	-	-	-	-	-	-	-	-	-	-
07	-	-	-	-	-	-	-	-	-	-	-	-
08	-	-	-	-	-	-	-	-	-	-	-	-
09	-	-	-	-	-	-	-	-	-	-	-	-
10	-	-	-	-	-	-	-	-	-	-	-	-
11	-	-	-	-	-	-	-	-	-	-	-	-
12	-	-	-	-	-	-	-	-	-	-	-	-
14	-	-	-	-	-	-	-	-	-	-	-	-
16	-	-	-	-	-	-	-	-	-	-	-	-
18	-	-	-	-	-	-	-	-	-	-	-	-
20	-	-	-	-	-	-	-	-	-	-	-	-
22	-	-	-	-	-	-	-	-	-	-	-	-
24	53.980	2.1252	-	-	-	-	-	-	-	-	-	-
26	53.980	2.1252	57.150	2.2500	-	-	-	-	-	-	-	-
28	53.980	2.1252	57.150	2.2500	60.330	2.3752	-	-	-	-	-	-
32	53.980	2.1252	57.150	2.2500	60.330	2.3752	63.500	2.5000	69.850	2.7500	-	-

Contact

USA: KAMATICS CORPORATION 1330 Blue Hills Avenue Bloomfield, CT 06002 USA | **Tel:** +1 860 243 9704 | **E-mail:** KSB@kaman.com
GERMANY: RWG GERMANY GmbH Medbacher Weg 1 D-91315 Höchstadt a. d. Aisch | **Tel:** +49 (91 93) 50105 100 | **E-mail:** RWG@kaman.com

Journal Bearings

EN4534

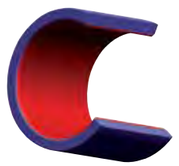

- Self-Lubricating
- Aluminium
- Cylindrical Type
- According to Specification EN2311 / SAE AS81934

Specifications

Diameter Code	Nominal Diameter		d		D		Length L -0.25 mm / -0.0098 Inch							
			-0.025	-0.0010	±0.013	±0.0005	005		006		007		008	
	mm	Inch	mm	Inch	mm	Inch	mm	Inch	mm	Inch	mm	Inch	mm	Inch
04	6.350	0.2500	6.388	0.2515	9.550	0.3760	3.970	0.1563	4.760	0.1874	5.560	0.2189	6.350	0.2500
05	7.938	0.3125	7.976	0.3140	11.140	0.4386	3.970	0.1563	4.760	0.1874	5.560	0.2189	6.350	0.2500
06	9.525	0.3750	9.563	0.3765	12.730	0.5012	3.970	0.1563	4.760	0.1874	5.560	0.2189	6.350	0.2500
07	11.113	0.4375	11.151	0.4390	14.321	0.5638	3.970	0.1563	4.760	0.1874	5.560	0.2189	6.350	0.2500
08	12.700	0.5000	12.738	0.5015	15.913	0.6265	3.970	0.1563	4.760	0.1874	5.560	0.2189	6.350	0.2500
09	14.288	0.5625	14.326	0.5640	17.506	0.6892	3.970	0.1563	4.760	0.1874	5.560	0.2189	6.350	0.2500
10	15.875	0.6250	15.913	0.6265	20.681	0.8142	3.970	0.1563	4.760	0.1874	5.560	0.2189	6.350	0.2500
11	17.463	0.6875	17.501	0.6890	22.268	0.8767	-	-	-	-	-	-	6.350	0.2500
12	19.050	0.7500	19.088	0.7515	23.858	0.9393	-	-	-	-	-	-	6.350	0.2500
14	22.225	0.8750	22.263	0.8765	27.038	1.0645	-	-	-	-	-	-	6.350	0.2500
16	25.400	1.0000	25.438	1.0015	30.221	1.1898	-	-	-	-	-	-	6.350	0.2500
18	28.575	1.1250	28.613	1.1265	33.396	1.3148	-	-	-	-	-	-	-	-
20	31.750	1.2500	31.788	1.2515	36.571	1.4398	-	-	-	-	-	-	-	-
22	34.925	1.3750	34.963	1.3765	39.746	1.5648	-	-	-	-	-	-	-	-
24	38.100	1.5000	38.138	1.5015	44.508	1.7523	-	-	-	-	-	-	-	-
26	41.275	1.6250	41.313	1.6265	47.683	1.8773	-	-	-	-	-	-	-	-
28	44.450	1.7500	44.488	1.7515	50.858	2.0023	-	-	-	-	-	-	-	-
32	50.800	2.0000	50.838	2.0015	57.208	2.2523	-	-	-	-	-	-	-	-

NOTES

Static Limit Load C_s:

$C_s = 0.29 \cdot d \cdot (L - 2)$ [kN]

Schematic Drawing

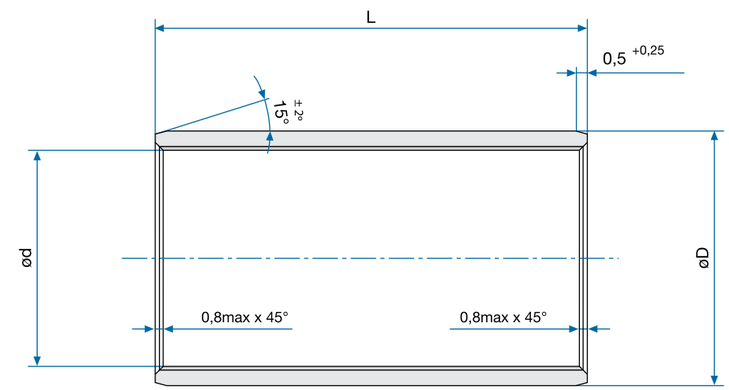

Specifications

EN4534

Diameter Code	Length L -0.25 mm / -0.0098 Inch													
	009		010		011		012		014		016		018	
	mm	Inch	mm	Inch	mm	Inch	mm	Inch	mm	Inch	mm	Inch	mm	Inch
04	7.140	0.2811	7.940	0.3126	8.730	0.3437	9.530	0.3752	11.110	0.4374	-	-	-	-
05	7.140	0.2811	7.940	0.3126	8.730	0.3437	9.530	0.3752	11.110	0.4374	12.700	0.5000	14.290	0.5626
06	7.140	0.2811	7.940	0.3126	8.730	0.3437	9.530	0.3752	11.110	0.4374	12.700	0.5000	14.290	0.5626
07	7.140	0.2811	7.940	0.3126	8.730	0.3437	9.530	0.3752	11.110	0.4374	12.700	0.5000	14.290	0.5626
08	7.140	0.2811	7.940	0.3126	8.730	0.3437	9.530	0.3752	11.110	0.4374	12.700	0.5000	14.290	0.5626
09	7.140	0.2811	7.940	0.3126	8.730	0.3437	9.530	0.3752	11.110	0.4374	12.700	0.5000	14.290	0.5626
10	7.140	0.2811	7.940	0.3126	8.730	0.3437	9.530	0.3752	11.110	0.4374	12.700	0.5000	14.290	0.5626
11	7.140	0.2811	7.940	0.3126	8.730	0.3437	9.530	0.3752	11.110	0.4374	12.700	0.5000	14.290	0.5626
12	7.140	0.2811	7.940	0.3126	8.730	0.3437	9.530	0.3752	11.110	0.4374	12.700	0.5000	14.290	0.5626
14	7.140	0.2811	7.940	0.3126	8.730	0.3437	9.530	0.3752	11.110	0.4374	12.700	0.5000	14.290	0.5626
16	7.140	0.2811	7.940	0.3126	8.730	0.3437	9.530	0.3752	11.110	0.4374	12.700	0.5000	14.290	0.5626
18	-	-	7.940	0.3126	8.730	0.3437	9.530	0.3752	11.110	0.4374	12.700	0.5000	14.290	0.5626
20	-	-	-	-	-	-	9.530	0.3752	11.110	0.4374	12.700	0.5000	14.290	0.5626
22	-	-	-	-	-	-	9.530	0.3752	11.110	0.4374	12.700	0.5000	14.290	0.5626
24	-	-	-	-	-	-	9.530	0.3752	11.110	0.4374	12.700	0.5000	14.290	0.5626
26	-	-	-	-	-	-	-	-	-	-	12.700	0.5000	14.290	0.5626
28	-	-	-	-	-	-	-	-	-	-	12.700	0.5000	14.290	0.5626
32	-	-	-	-	-	-	-	-	-	-	12.700	0.5000	14.290	0.5626

EN4534 continued on pg 274. ►

Specifications

EN4534

Diameter Code	Length L -0.25 mm / -0.0098 Inch													
	020		022		024		028		032		036		040	
	mm	Inch	mm	Inch	mm	Inch	mm	Inch	mm	Inch	mm	Inch	mm	Inch
04	-	-	-	-	-	-	-	-	-	-	-	-	-	-
05	-	-	-	-	-	-	-	-	-	-	-	-	-	-
06	15.880	0.6252	17.460	0.6874	-	-	-	-	-	-	-	-	-	-
07	15.880	0.6252	17.460	0.6874	19.050	0.7500	22.230	0.8752	-	-	-	-	-	-
08	15.880	0.6252	17.460	0.6874	19.050	0.7500	22.230	0.8752	-	-	-	-	-	-
09	15.880	0.6252	17.460	0.6874	19.050	0.7500	22.230	0.8752	25.400	1.0000	-	-	-	-
10	15.880	0.6252	17.460	0.6874	19.050	0.7500	22.230	0.8752	25.400	1.0000	28.580	1.1252	-	-
11	15.880	0.6252	17.460	0.6874	19.050	0.7500	22.230	0.8752	25.400	1.0000	28.580	1.1252	31.750	1.2500
12	15.880	0.6252	17.460	0.6874	19.050	0.7500	22.230	0.8752	25.400	1.0000	28.580	1.1252	31.750	1.2500
14	15.880	0.6252	17.460	0.6874	19.050	0.7500	22.230	0.8752	25.400	1.0000	28.580	1.1252	31.750	1.2500
16	15.880	0.6252	17.460	0.6874	19.050	0.7500	22.230	0.8752	25.400	1.0000	28.580	1.1252	31.750	1.2500
18	15.880	0.6252	17.460	0.6874	19.050	0.7500	22.230	0.8752	25.400	1.0000	28.580	1.1252	31.750	1.2500
20	15.880	0.6252	17.460	0.6874	19.050	0.7500	22.230	0.8752	25.400	1.0000	28.580	1.1252	31.750	1.2500
22	15.880	0.6252	17.460	0.6874	19.050	0.7500	22.230	0.8752	25.400	1.0000	28.580	1.1252	31.750	1.2500
24	15.880	0.6252	17.460	0.6874	19.050	0.7500	22.230	0.8752	25.400	1.0000	28.580	1.1252	31.750	1.2500
26	15.880	0.6252	17.460	0.6874	19.050	0.7500	22.230	0.8752	25.400	1.0000	28.580	1.1252	31.750	1.2500
28	15.880	0.6252	17.460	0.6874	19.050	0.7500	22.230	0.8752	25.400	1.0000	28.580	1.1252	31.750	1.2500
32	15.880	0.6252	17.460	0.6874	19.050	0.7500	22.230	0.8752	25.400	1.0000	28.580	1.1252	31.750	1.2500

Designation

EN4534-2
Number of Standard

04
Diameter Code

R
Surface Treatment
No Code: None
R: Anodized

006
Length Code

Part Number Example
EN4534-2 04 R 006

Bearing Materials:

Material
EN2318 / 3.1354 T3511 / Alloy 2024

Liner
FRASLIP F per EN2311 / SAE AS81934

Technical Specification
EN2311 / SAE AS81934

** Inch dimensions are for reference only. | * Permanently marked in non-functional area.*

Specifications

EN4534

Diameter Code	Length L -0.25 mm / -0.0098 Inch											
	044		048		052		056		060		064	
	mm	Inch	mm	Inch	mm	Inch	mm	Inch	mm	Inch	mm	Inch
04	-	-	-	-	-	-	-	-	-	-	-	-
05	-	-	-	-	-	-	-	-	-	-	-	-
06	-	-	-	-	-	-	-	-	-	-	-	-
07	-	-	-	-	-	-	-	-	-	-	-	-
08	-	-	-	-	-	-	-	-	-	-	-	-
09	-	-	-	-	-	-	-	-	-	-	-	-
10	-	-	-	-	-	-	-	-	-	-	-	-
11	-	-	-	-	-	-	-	-	-	-	-	-
12	34.930	1.3752	-	-	-	-	-	-	-	-	-	-
14	34.930	1.3752	38.100	1.5000	41.280	1.6252	-	-	-	-	-	-
16	34.930	1.3752	38.100	1.5000	41.280	1.6252	44.450	1.7500	47.630	1.8752	-	-
18	34.930	1.3752	38.100	1.5000	41.280	1.6252	44.450	1.7500	47.630	1.8752	-	-
20	34.930	1.3752	38.100	1.5000	41.280	1.6252	44.450	1.7500	47.630	1.8752	50.800	2.0000
22	34.930	1.3752	38.100	1.5000	41.280	1.6252	44.450	1.7500	47.630	1.8752	50.800	2.0000
24	34.930	1.3752	38.100	1.5000	41.280	1.6252	44.450	1.7500	47.630	1.8752	50.800	2.0000
26	34.930	1.3752	38.100	1.5000	41.280	1.6252	44.450	1.7500	47.630	1.8752	50.800	2.0000
28	34.930	1.3752	38.100	1.5000	41.280	1.6252	44.450	1.7500	47.630	1.8752	50.800	2.0000
32	34.930	1.3752	38.100	1.5000	41.280	1.6252	44.450	1.7500	47.630	1.8752	50.800	2.0000

Diameter Code	Length L -0.25 mm / -0.0098 Inch											
	068		072		076		080		088		096	
	mm	Inch	mm	Inch	mm	Inch	mm	Inch	mm	Inch	mm	Inch
04	-	-	-	-	-	-	-	-	-	-	-	-
05	-	-	-	-	-	-	-	-	-	-	-	-
06	-	-	-	-	-	-	-	-	-	-	-	-
07	-	-	-	-	-	-	-	-	-	-	-	-
08	-	-	-	-	-	-	-	-	-	-	-	-
09	-	-	-	-	-	-	-	-	-	-	-	-
10	-	-	-	-	-	-	-	-	-	-	-	-
11	-	-	-	-	-	-	-	-	-	-	-	-
12	-	-	-	-	-	-	-	-	-	-	-	-
14	-	-	-	-	-	-	-	-	-	-	-	-
16	-	-	-	-	-	-	-	-	-	-	-	-
18	-	-	-	-	-	-	-	-	-	-	-	-
20	53.980	2.1252	-	-	-	-	-	-	-	-	-	-
22	53.980	2.1252	-	-	-	-	-	-	-	-	-	-
24	53.980	2.1252	57.150	2.2500	60.330	2.3752	63.500	2.5000	69.850	2.7500	-	-
26	53.980	2.1252	57.150	2.2500	60.330	2.3752	63.500	2.5000	69.850	2.7500	76.200	3.0000
28	53.980	2.1252	57.150	2.2500	60.330	2.3752	63.500	2.5000	69.850	2.7500	76.200	3.0000
32	53.980	2.1252	57.150	2.2500	60.330	2.3752	63.500	2.5000	69.850	2.7500	76.200	3.0000

Contact

USA: KAMATICS CORPORATION 1330 Blue Hills Avenue Bloomfield, CT 06002 USA | **Tel:** +1 860 243 9704 | **E-mail:** KSB@kaman.com
GERMANY: RWG GERMANY GmbH Medbacher Weg 1 D-91315 Höchstadt a. d. Aisch | **Tel:** +49 (91 93) 50105 100 | **E-mail:** RWG@kaman.com

Journal Bearings

EN4536

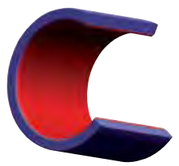

- Self-Lubricating
- CRES
- Cylindrical Type
- According to Specification EN2311 / SAE AS81934

Specifications

Diameter Code	Nominal Diameter		d		D		Length L -0.25 mm / -0.0098 Inch							
			-0.025	-0.0010	-0.013	-0.0005	005		006		007		008	
	mm	Inch	mm	Inch	mm	Inch	mm	Inch	mm	Inch	mm	Inch	mm	Inch
04	6.350	0.2500	6.388	0.2515	9.550	0.3760	3.970	0.1563	4.760	0.1874	5.560	0.2189	6.350	0.2500
05	7.938	0.3125	7.976	0.3140	11.140	0.4386	3.970	0.1563	4.760	0.1874	5.560	0.2189	6.350	0.2500
06	9.525	0.3750	9.563	0.3765	12.730	0.5012	3.970	0.1563	4.760	0.1874	5.560	0.2189	6.350	0.2500
07	11.113	0.4375	11.151	0.4390	14.320	0.5638	3.970	0.1563	4.760	0.1874	5.560	0.2189	6.350	0.2500
08	12.700	0.5000	12.738	0.5015	15.913	0.6265	3.970	0.1563	4.760	0.1874	5.560	0.2189	6.350	0.2500
09	14.288	0.5625	14.326	0.5640	17.505	0.6892	3.970	0.1563	4.760	0.1874	5.560	0.2189	6.350	0.2500
10	15.875	0.6250	15.913	0.6265	20.680	0.8142	3.970	0.1563	4.760	0.1874	5.560	0.2189	6.350	0.2500
11	17.463	0.6875	17.501	0.6890	22.268	0.8767	-	-	-	-	-	-	6.350	0.2500
12	19.050	0.7500	19.088	0.7515	23.858	0.9393	-	-	-	-	-	-	6.350	0.2500
14	22.225	0.8750	22.263	0.8765	27.038	1.0645	-	-	-	-	-	-	6.350	0.2500
16	25.400	1.0000	25.438	1.0015	30.221	1.1898	-	-	-	-	-	-	6.350	0.2500
18	28.575	1.1250	28.613	1.1265	33.396	1.3148	-	-	-	-	-	-	-	-
20	31.750	1.2500	31.788	1.2515	36.571	1.4398	-	-	-	-	-	-	-	-
22	34.925	1.3750	34.963	1.3765	39.746	1.5648	-	-	-	-	-	-	-	-
24	38.100	1.5000	38.138	1.5015	44.508	1.7523	-	-	-	-	-	-	-	-
26	41.275	1.6250	41.313	1.6265	47.683	1.8773	-	-	-	-	-	-	-	-
28	44.450	1.7500	44.488	1.7515	50.858	2.0023	-	-	-	-	-	-	-	-
32	50.800	2.0000	50.838	2.0015	57.208	2.2523	-	-	-	-	-	-	-	-

NOTES

Static Limit Load C_s:

$C_s = 0.541 \cdot d \cdot (L - 2)$ [kN]

Schematic Drawing

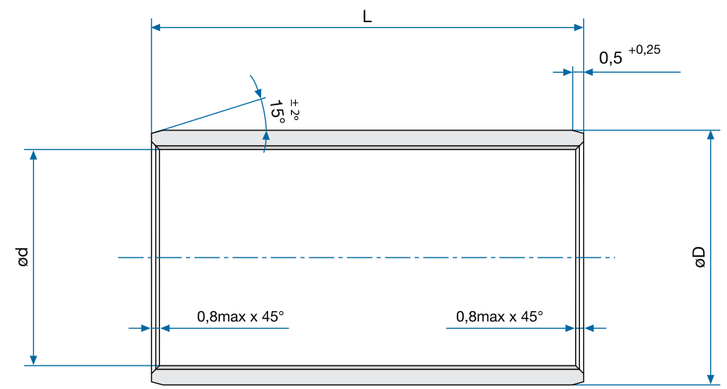

Specifications

EN4536

Diameter Code	Length L -0.25 mm / -0.0098 Inch													
	009		010		011		012		014		016		018	
	mm	Inch	mm	Inch	mm	Inch	mm	Inch	mm	Inch	mm	Inch	mm	Inch
04	7.140	0.2811	7.940	0.3126	8.730	0.3437	9.530	0.3752	-	-	-	-	-	-
05	7.140	0.2811	7.940	0.3126	8.730	0.3437	9.530	0.3752	11.110	0.4374	-	-	-	-
06	7.140	0.2811	7.940	0.3126	8.730	0.3437	9.530	0.3752	11.110	0.4374	12.700	0.5000	14.290	0.5626
07	7.140	0.2811	7.940	0.3126	8.730	0.3437	9.530	0.3752	11.110	0.4374	12.700	0.5000	14.290	0.5626
08	7.140	0.2811	7.940	0.3126	8.730	0.3437	9.530	0.3752	11.110	0.4374	12.700	0.5000	14.290	0.5626
09	7.140	0.2811	7.940	0.3126	8.730	0.3437	9.530	0.3752	11.110	0.4374	12.700	0.5000	14.290	0.5626
10	7.140	0.2811	7.940	0.3126	8.730	0.3437	9.530	0.3752	11.110	0.4374	12.700	0.5000	14.290	0.5626
11	7.140	0.2811	7.940	0.3126	8.730	0.3437	9.530	0.3752	11.110	0.4374	12.700	0.5000	14.290	0.5626
12	7.140	0.2811	7.940	0.3126	8.730	0.3437	9.530	0.3752	11.110	0.4374	12.700	0.5000	14.290	0.5626
14	7.140	0.2811	7.940	0.3126	8.730	0.3437	9.530	0.3752	11.110	0.4374	12.700	0.5000	14.290	0.5626
16	7.140	0.2811	7.940	0.3126	8.730	0.3437	9.530	0.3752	11.110	0.4374	12.700	0.5000	14.290	0.5626
18	-	-	7.940	0.3126	8.730	0.3437	9.530	0.3752	11.110	0.4374	12.700	0.5000	14.290	0.5626
20	-	-	-	-	-	-	9.530	0.3752	11.110	0.4374	12.700	0.5000	14.290	0.5626
22	-	-	-	-	-	-	9.530	0.3752	11.110	0.4374	12.700	0.5000	14.290	0.5626
24	-	-	-	-	-	-	9.530	0.3752	11.110	0.4374	12.700	0.5000	14.290	0.5626
26	-	-	-	-	-	-	-	-	-	-	12.700	0.5000	14.290	0.5626
28	-	-	-	-	-	-	-	-	-	-	12.700	0.5000	14.290	0.5626
32	-	-	-	-	-	-	-	-	-	-	12.700	0.5000	14.290	0.5626

EN4536 continued on pg 278. ►

Specifications

EN4536

Diameter Code	Length L -0.25 mm / -0.0098 Inch													
	020		022		024		028		032		036		040	
	mm	Inch	mm	Inch	mm	Inch	mm	Inch	mm	Inch	mm	Inch	mm	Inch
04	-	-	-	-	-	-	-	-	-	-	-	-	-	-
05	-	-	-	-	-	-	-	-	-	-	-	-	-	-
06	-	-	-	-	-	-	-	-	-	-	-	-	-	-
07	15.880	0.6252	-	-	-	-	-	-	-	-	-	-	-	-
08	15.880	0.6252	17.460	0.6874	-	-	-	-	-	-	-	-	-	-
09	15.880	0.6252	17.460	0.6874	19.050	0.7500	-	-	-	-	-	-	-	-
10	15.880	0.6252	17.460	0.6874	19.050	0.7500	22.230	0.8752	-	-	-	-	-	-
11	15.880	0.6252	17.460	0.6874	19.050	0.7500	22.230	0.8752	25.400	1.0000	-	-	-	-
12	15.880	0.6252	17.460	0.6874	19.050	0.7500	22.230	0.8752	25.400	1.0000	-	-	-	-
14	15.880	0.6252	17.460	0.6874	19.050	0.7500	22.230	0.8752	25.400	1.0000	28.580	1.1252	31.750	1.2500
16	15.880	0.6252	17.460	0.6874	19.050	0.7500	22.230	0.8752	25.400	1.0000	28.580	1.1252	31.750	1.2500
18	15.880	0.6252	17.460	0.6874	19.050	0.7500	22.230	0.8752	25.400	1.0000	28.580	1.1252	31.750	1.2500
20	15.880	0.6252	17.460	0.6874	19.050	0.7500	22.230	0.8752	25.400	1.0000	28.580	1.1252	31.750	1.2500
22	15.880	0.6252	17.460	0.6874	19.050	0.7500	22.230	0.8752	25.400	1.0000	28.580	1.1252	31.750	1.2500
24	15.880	0.6252	17.460	0.6874	19.050	0.7500	22.230	0.8752	25.400	1.0000	28.580	1.1252	31.750	1.2500
26	15.880	0.6252	17.460	0.6874	19.050	0.7500	22.230	0.8752	25.400	1.0000	28.580	1.1252	31.750	1.2500
28	15.880	0.6252	17.460	0.6874	19.050	0.7500	22.230	0.8752	25.400	1.0000	28.580	1.1252	31.750	1.2500
32	15.880	0.6252	17.460	0.6874	19.050	0.7500	22.230	0.8752	25.400	1.0000	28.580	1.1252	31.750	1.2500

Designation

EN4536-2
Number of Standard

04
Diameter Code

T
Surface Treatment
No Code: None
T: Passivated

007
Length Code

Part Number Example
EN4536-2 04 T 007

Bearing Materials:

Material
EN3161 / 1.4545 / 17-4PH
H1150

Liner
FRASLIP F per EN2311 /
SAE AS81934

Technical Specification
EN2311 / SAE AS81934

** Inch dimensions are for reference only. | * Permanently marked in non-functional area.*

Specifications

EN4536

Diameter Code	Length L -0.25 mm / -0.0098 Inch											
	044		048		052		056		060		064	
	mm	Inch	mm	Inch	mm	Inch	mm	Inch	mm	Inch	mm	Inch
04	-	-	-	-	-	-	-	-	-	-	-	-
05	-	-	-	-	-	-	-	-	-	-	-	-
06	-	-	-	-	-	-	-	-	-	-	-	-
07	-	-	-	-	-	-	-	-	-	-	-	-
08	-	-	-	-	-	-	-	-	-	-	-	-
09	-	-	-	-	-	-	-	-	-	-	-	-
10	-	-	-	-	-	-	-	-	-	-	-	-
11	-	-	-	-	-	-	-	-	-	-	-	-
12	-	-	-	-	-	-	-	-	-	-	-	-
14	-	-	-	-	-	-	-	-	-	-	-	-
16	34.930	1.3752	-	-	-	-	-	-	-	-	-	-
18	34.930	1.3752	38.100	1.5000	-	-	-	-	-	-	-	-
20	34.930	1.3752	38.100	1.5000	41.280	1.6252	44.450	1.7500	-	-	-	-
22	34.930	1.3752	38.100	1.5000	41.280	1.6252	44.450	1.7500	47.630	1.8752	-	-
24	34.930	1.3752	38.100	1.5000	41.280	1.6252	44.450	1.7500	47.630	1.8752	50.800	2.0000
26	34.930	1.3752	38.100	1.5000	41.280	1.6252	44.450	1.7500	47.630	1.8752	50.800	2.0000
28	34.930	1.3752	38.100	1.5000	41.280	1.6252	44.450	1.7500	47.630	1.8752	50.800	2.0000
32	34.930	1.3752	38.100	1.5000	41.280	1.6252	44.450	1.7500	47.630	1.8752	50.800	2.0000

Diameter Code	Length L -0.25 mm / -0.0098 Inch											
	068		072		076		080		088		096	
	mm	Inch	mm	Inch	mm	Inch	mm	Inch	mm	Inch	mm	Inch
04	-	-	-	-	-	-	-	-	-	-	-	-
05	-	-	-	-	-	-	-	-	-	-	-	-
06	-	-	-	-	-	-	-	-	-	-	-	-
07	-	-	-	-	-	-	-	-	-	-	-	-
08	-	-	-	-	-	-	-	-	-	-	-	-
09	-	-	-	-	-	-	-	-	-	-	-	-
10	-	-	-	-	-	-	-	-	-	-	-	-
11	-	-	-	-	-	-	-	-	-	-	-	-
12	-	-	-	-	-	-	-	-	-	-	-	-
14	-	-	-	-	-	-	-	-	-	-	-	-
16	-	-	-	-	-	-	-	-	-	-	-	-
18	-	-	-	-	-	-	-	-	-	-	-	-
20	-	-	-	-	-	-	-	-	-	-	-	-
22	-	-	-	-	-	-	-	-	-	-	-	-
24	53.980	2.1252	-	-	-	-	-	-	-	-	-	-
26	53.980	2.1252	57.150	2.2500	-	-	-	-	-	-	-	-
28	53.980	2.1252	57.150	2.2500	60.330	2.3752	-	-	-	-	-	-
32	53.980	2.1252	57.150	2.2500	60.330	2.3752	63.500	2.5000	69.850	2.7500	-	-

Contact

USA: KAMATICS CORPORATION 1330 Blue Hills Avenue Bloomfield, CT 06002 USA | **Tel:** +1 860 243 9704 | **E-mail:** KSB@kaman.com
GERMANY: RWG GERMANY GmbH Medbacher Weg 1 D-91315 Höchstadt a. d. Aisch | **Tel:** +49 (91 93) 50105 100 | **E-mail:** RWG@kaman.com

Journal Bearings

FBPA…A… / FBPA…C…

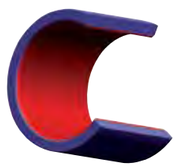

- Self-Lubricating
- Aluminium
- CRES
- Cylindrical Type
- According to Specification EN2311 / SAE AS81934

Specifications

Diameter Code	Nominal Diameter		d		D		Δ Dmp		Δ Dmp		Length L -0.127 mm / -0.381 mm -0.0050 Inch / -0.0150 Inch			
			-0.025	-0.0010			Code C		Code A		005		006	
	mm	Inch	mm	Inch	mm	Inch	mm	Inch	mm	Inch	mm	Inch	mm	Inch
04	6.350	0.2500	6.388	0.2515	9.550	0.3760	-0.012	-0.0005	±0.012	±0.0005	3.960	0.1559	4.750	0.1870
05	7.937	0.3125	7.975	0.3140	11.140	0.4386	-0.012	-0.0005	±0.012	±0.0005	3.960	0.1559	4.750	0.1870
06	9.525	0.3750	9.563	0.3765	12.730	0.5012	-0.012	-0.0005	±0.012	±0.0005	3.960	0.1559	4.750	0.1870
07	11.113	0.4375	11.151	0.4390	14.320	0.5638	-0.012	-0.0005	±0.012	±0.0005	3.960	0.1559	4.750	0.1870
08	12.700	0.5000	12.738	0.5015	15.913	0.6265	-0.012	-0.0005	±0.012	±0.0005	3.960	0.1559	4.750	0.1870
09	14.288	0.5625	14.326	0.5640	17.505	0.6892	-0.012	-0.0005	±0.012	±0.0005	3.960	0.1559	4.750	0.1870
10	15.875	0.6250	15.913	0.6265	20.680	0.8142	-0.012	-0.0005	±0.012	±0.0005	3.960	0.1559	4.750	0.1870
11	17.463	0.6875	17.501	0.6890	22.268	0.8767	-0.012	-0.0005	±0.012	±0.0005	3.960	0.1559	4.750	0.1870
12	19.050	0.7500	19.088	0.7515	23.858	0.9393	-0.012	-0.0005	±0.012	±0.0005	3.960	0.1559	4.750	0.1870
14	22.225	0.8750	22.263	0.8765	27.038	1.0645	-0.012	-0.0005	±0.012	±0.0005	3.960	0.1559	4.750	0.1870
16	25.400	1.0000	25.438	1.0015	30.221	1.1898	-0.012	-0.0005	±0.012	±0.0005	3.960	0.1559	4.750	0.1870
18	28.575	1.1250	28.613	1.1265	33.396	1.3148	-0.012	-0.0005	±0.012	±0.0005	3.960	0.1559	4.750	0.1870
20	31.750	1.2500	31.788	1.2515	36.571	1.4398	-0.012	-0.0005	±0.012	±0.0005	3.960	0.1559	4.750	0.1870
22	34.925	1.3750	34.963	1.3765	39.746	1.5648	-0.012	-0.0005	±0.012	±0.0005	3.960	0.1559	4.750	0.1870
24	38.100	1.5000	38.138	1.5015	44.508	1.7523	-0.012	-0.0005	±0.012	±0.0005	3.960	0.1559	4.750	0.1870
26	41.275	1.6250	41.313	1.6265	47.683	1.8773	-0.012	-0.0005	±0.012	±0.0005	3.960	0.1559	4.750	0.1870
28	44.450	1.7500	44.488	1.7515	50.858	2.0023	-0.012	-0.0005	±0.012	±0.0005	3.960	0.1559	4.750	0.1870
32	50.800	2.0000	50.838	2.0015	57.208	2.2523	-0.012	-0.0005	±0.012	±0.0005	3.960	0.1559	4.750	0.1870

NOTES

Static Limit Load C_s:

Material Code A: $C_s = 0.345 \cdot d \cdot (L - 2.54)$ [kN]
Material Code C: $C_s = 0.541 \cdot d \cdot (L - 2.54)$ [kN]

Schematic Drawing

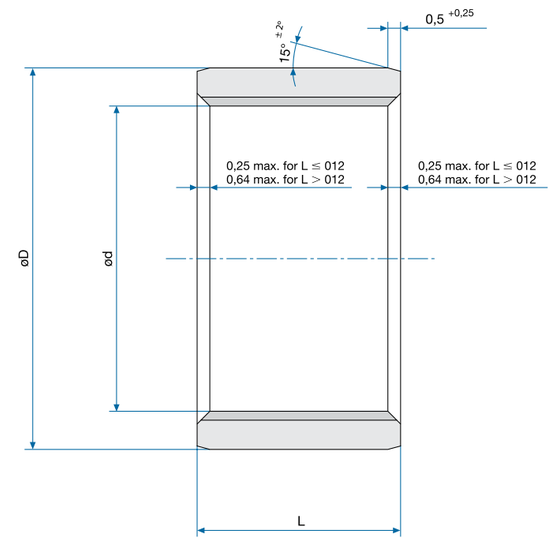

Specifications

FBPA…A… / FBPA…C…

Diameter Code	Length L -0.127 mm / -0.381 mm -0.0050 Inch / -0.0150 Inch													
	007		008		009		010		011		012		014	
	mm	Inch	mm	Inch	mm	Inch	mm	Inch	mm	Inch	mm	Inch	mm	Inch
04	5.530	0.2177	6.350	0.2500	7.140	0.2811	7.920	0.3118	8.710	0.3429	9.525	0.3750	11.100	0.4370
05	5.530	0.2177	6.350	0.2500	7.140	0.2811	7.920	0.3118	8.710	0.3429	9.525	0.3750	11.100	0.4370
06	5.530	0.2177	6.350	0.2500	7.140	0.2811	7.920	0.3118	8.710	0.3429	9.525	0.3750	11.100	0.4370
07	5.530	0.2177	6.350	0.2500	7.140	0.2811	7.920	0.3118	8.710	0.3429	9.525	0.3750	11.100	0.4370
08	5.530	0.2177	6.350	0.2500	7.140	0.2811	7.920	0.3118	8.710	0.3429	9.525	0.3750	11.100	0.4370
09	5.530	0.2177	6.350	0.2500	7.140	0.2811	7.920	0.3118	8.710	0.3429	9.525	0.3750	11.100	0.4370
10	5.530	0.2177	6.350	0.2500	7.140	0.2811	7.920	0.3118	8.710	0.3429	9.525	0.3750	11.100	0.4370
11	5.530	0.2177	6.350	0.2500	7.140	0.2811	7.920	0.3118	8.710	0.3429	9.525	0.3750	11.100	0.4370
12	5.530	0.2177	6.350	0.2500	7.140	0.2811	7.920	0.3118	8.710	0.3429	9.525	0.3750	11.100	0.4370
14	5.530	0.2177	6.350	0.2500	7.140	0.2811	7.920	0.3118	8.710	0.3429	9.525	0.3750	11.100	0.4370
16	5.530	0.2177	6.350	0.2500	7.140	0.2811	7.920	0.3118	8.710	0.3429	9.525	0.3750	11.100	0.4370
18	5.530	0.2177	6.350	0.2500	7.140	0.2811	7.920	0.3118	8.710	0.3429	9.525	0.3750	11.100	0.4370
20	5.530	0.2177	6.350	0.2500	7.140	0.2811	7.920	0.3118	8.710	0.3429	9.525	0.3750	11.100	0.4370
22	5.530	0.2177	6.350	0.2500	7.140	0.2811	7.920	0.3118	8.710	0.3429	9.525	0.3750	11.100	0.4370
24	5.530	0.2177	6.350	0.2500	7.140	0.2811	7.920	0.3118	8.710	0.3429	9.525	0.3750	11.100	0.4370
26	5.530	0.2177	6.350	0.2500	7.140	0.2811	7.920	0.3118	8.710	0.3429	9.525	0.3750	11.100	0.4370
28	5.530	0.2177	6.350	0.2500	7.140	0.2811	7.920	0.3118	8.710	0.3429	9.525	0.3750	11.100	0.4370
32	5.530	0.2177	6.350	0.2500	7.140	0.2811	7.920	0.3118	8.710	0.3429	9.525	0.3750	11.100	0.4370

FBPA…A… / FBPA…C… continued on pg 282. ►

Specifications

FBPA…A… / FBPA…C…

Diameter Code	Length L -0.127 mm / -0.381 mm -0.0050 Inch / -0.0150 Inch													
	016		018		020		022		024		028		032	
	mm	Inch	mm	Inch	mm	Inch	mm	Inch	mm	Inch	mm	Inch	mm	Inch
04	12.700	0.5000	14.274	0.5620	15.875	0.6250	17.450	0.6870	19.050	0.7500	22.225	0.8750	25.400	1.0000
05	12.700	0.5000	14.274	0.5620	15.875	0.6250	17.450	0.6870	19.050	0.7500	22.225	0.8750	25.400	1.0000
06	12.700	0.5000	14.274	0.5620	15.875	0.6250	17.450	0.6870	19.050	0.7500	22.225	0.8750	25.400	1.0000
07	12.700	0.5000	14.274	0.5620	15.875	0.6250	17.450	0.6870	19.050	0.7500	22.225	0.8750	25.400	1.0000
08	12.700	0.5000	14.274	0.5620	15.875	0.6250	17.450	0.6870	19.050	0.7500	22.225	0.8750	25.400	1.0000
09	12.700	0.5000	14.274	0.5620	15.875	0.6250	17.450	0.6870	19.050	0.7500	22.225	0.8750	25.400	1.0000
10	12.700	0.5000	14.274	0.5620	15.875	0.6250	17.450	0.6870	19.050	0.7500	22.225	0.8750	25.400	1.0000
11	12.700	0.5000	14.274	0.5620	15.875	0.6250	17.450	0.6870	19.050	0.7500	22.225	0.8750	25.400	1.0000
12	12.700	0.5000	14.274	0.5620	15.875	0.6250	17.450	0.6870	19.050	0.7500	22.225	0.8750	25.400	1.0000
14	12.700	0.5000	14.274	0.5620	15.875	0.6250	17.450	0.6870	19.050	0.7500	22.225	0.8750	25.400	1.0000
16	12.700	0.5000	14.274	0.5620	15.875	0.6250	17.450	0.6870	19.050	0.7500	22.225	0.8750	25.400	1.0000
18	12.700	0.5000	14.274	0.5620	15.875	0.6250	17.450	0.6870	19.050	0.7500	22.225	0.8750	25.400	1.0000
20	12.700	0.5000	14.274	0.5620	15.875	0.6250	17.450	0.6870	19.050	0.7500	22.225	0.8750	25.400	1.0000
22	12.700	0.5000	14.274	0.5620	15.875	0.6250	17.450	0.6870	19.050	0.7500	22.225	0.8750	25.400	1.0000
24	12.700	0.5000	14.274	0.5620	15.875	0.6250	17.450	0.6870	19.050	0.7500	22.225	0.8750	25.400	1.0000
26	12.700	0.5000	14.274	0.5620	15.875	0.6250	17.450	0.6870	19.050	0.7500	22.225	0.8750	25.400	1.0000
28	12.700	0.5000	14.274	0.5620	15.875	0.6250	17.450	0.6870	19.050	0.7500	22.225	0.8750	25.400	1.0000
32	12.700	0.5000	14.274	0.5620	15.875	0.6250	17.450	0.6870	19.050	0.7500	22.225	0.8750	25.400	1.0000

Designation

FBPA
Number of Standard

08
Diameter Code

A
Material

010
Length Code

P
Surface Treatment
No Code: None
P: Cadmium Plated (Material Code C Only)

Part Number Example
FBPA 08 A 010 P

Bearing Materials:

Material
A: EN2318 / Alloy 2024 / 3.1354; Anodized
C: EN3161 / 1.4548 / 17-4PH H1150

Liner
FRASLIP F per EN2311 / SAE AS81934

Technical Specification
EN2311 / SAE AS81934

** Inch dimensions are for reference only. | * Permanently marked in non-functional area.*

Specifications

FBPA…A… / FBPA…C…

Diameter Code	Length L -0.127 mm / -0.381 mm -0.0050 Inch / -0.0150 Inch													
	036		040		044		048		052		056		060	
	mm	Inch	mm	Inch	mm	Inch	mm	Inch	mm	Inch	mm	Inch	mm	Inch
04	28.575	1.1250	31.750	1.2500	34.925	1.3750	38.100	1.5000	41.275	1.6250	44.450	1.7500	47.625	1.8750
05	28.575	1.1250	31.750	1.2500	34.925	1.3750	38.100	1.5000	41.275	1.6250	44.450	1.7500	47.625	1.8750
06	28.575	1.1250	31.750	1.2500	34.925	1.3750	38.100	1.5000	41.275	1.6250	44.450	1.7500	47.625	1.8750
07	28.575	1.1250	31.750	1.2500	34.925	1.3750	38.100	1.5000	41.275	1.6250	44.450	1.7500	47.625	1.8750
08	28.575	1.1250	31.750	1.2500	34.925	1.3750	38.100	1.5000	41.275	1.6250	44.450	1.7500	47.625	1.8750
09	28.575	1.1250	31.750	1.2500	34.925	1.3750	38.100	1.5000	41.275	1.6250	44.450	1.7500	47.625	1.8750
10	28.575	1.1250	31.750	1.2500	34.925	1.3750	38.100	1.5000	41.275	1.6250	44.450	1.7500	47.625	1.8750
11	28.575	1.1250	31.750	1.2500	34.925	1.3750	38.100	1.5000	41.275	1.6250	44.450	1.7500	47.625	1.8750
12	28.575	1.1250	31.750	1.2500	34.925	1.3750	38.100	1.5000	41.275	1.6250	44.450	1.7500	47.625	1.8750
14	28.575	1.1250	31.750	1.2500	34.925	1.3750	38.100	1.5000	41.275	1.6250	44.450	1.7500	47.625	1.8750
16	28.575	1.1250	31.750	1.2500	34.925	1.3750	38.100	1.5000	41.275	1.6250	44.450	1.7500	47.625	1.8750
18	28.575	1.1250	31.750	1.2500	34.925	1.3750	38.100	1.5000	41.275	1.6250	44.450	1.7500	47.625	1.8750
20	28.575	1.1250	31.750	1.2500	34.925	1.3750	38.100	1.5000	41.275	1.6250	44.450	1.7500	47.625	1.8750
22	28.575	1.1250	31.750	1.2500	34.925	1.3750	38.100	1.5000	41.275	1.6250	44.450	1.7500	47.625	1.8750
24	28.575	1.1250	31.750	1.2500	34.925	1.3750	38.100	1.5000	41.275	1.6250	44.450	1.7500	47.625	1.8750
26	28.575	1.1250	31.750	1.2500	34.925	1.3750	38.100	1.5000	41.275	1.6250	44.450	1.7500	47.625	1.8750
28	28.575	1.1250	31.750	1.2500	34.925	1.3750	38.100	1.5000	41.275	1.6250	44.450	1.7500	47.625	1.8750
32	28.575	1.1250	31.750	1.2500	34.925	1.3750	38.100	1.5000	41.275	1.6250	44.450	1.7500	47.625	1.8750

Diameter Code	Length L -0.127 mm / -0.381 mm -0.0050 Inch / -0.0150 Inch													
	064		068		072		076		080		088		096	
	mm	Inch	mm	Inch	mm	Inch	mm	Inch	mm	Inch	mm	Inch	mm	Inch
04	50.800	2.0000	53.975	2.1250	57.150	2.2500	60.325	2.3750	63.500	2.5000	69.850	2.7500	76.200	3.0000
05	50.800	2.0000	53.975	2.1250	57.150	2.2500	60.325	2.3750	63.500	2.5000	69.850	2.7500	76.200	3.0000
06	50.800	2.0000	53.975	2.1250	57.150	2.2500	60.325	2.3750	63.500	2.5000	69.850	2.7500	76.200	3.0000
07	50.800	2.0000	53.975	2.1250	57.150	2.2500	60.325	2.3750	63.500	2.5000	69.850	2.7500	76.200	3.0000
08	50.800	2.0000	53.975	2.1250	57.150	2.2500	60.325	2.3750	63.500	2.5000	69.850	2.7500	76.200	3.0000
09	50.800	2.0000	53.975	2.1250	57.150	2.2500	60.325	2.3750	63.500	2.5000	69.850	2.7500	76.200	3.0000
10	50.800	2.0000	53.975	2.1250	57.150	2.2500	60.325	2.3750	63.500	2.5000	69.850	2.7500	76.200	3.0000
11	50.800	2.0000	53.975	2.1250	57.150	2.2500	60.325	2.3750	63.500	2.5000	69.850	2.7500	76.200	3.0000
12	50.800	2.0000	53.975	2.1250	57.150	2.2500	60.325	2.3750	63.500	2.5000	69.850	2.7500	76.200	3.0000
14	50.800	2.0000	53.975	2.1250	57.150	2.2500	60.325	2.3750	63.500	2.5000	69.850	2.7500	76.200	3.0000
16	50.800	2.0000	53.975	2.1250	57.150	2.2500	60.325	2.3750	63.500	2.5000	69.850	2.7500	76.200	3.0000
18	50.800	2.0000	53.975	2.1250	57.150	2.2500	60.325	2.3750	63.500	2.5000	69.850	2.7500	76.200	3.0000
20	50.800	2.0000	53.975	2.1250	57.150	2.2500	60.325	2.3750	63.500	2.5000	69.850	2.7500	76.200	3.0000
22	50.800	2.0000	53.975	2.1250	57.150	2.2500	60.325	2.3750	63.500	2.5000	69.850	2.7500	76.200	3.0000
24	50.800	2.0000	53.975	2.1250	57.150	2.2500	60.325	2.3750	63.500	2.5000	69.850	2.7500	76.200	3.0000
26	50.800	2.0000	53.975	2.1250	57.150	2.2500	60.325	2.3750	63.500	2.5000	69.850	2.7500	76.200	3.0000
28	50.800	2.0000	53.975	2.1250	57.150	2.2500	60.325	2.3750	63.500	2.5000	69.850	2.7500	76.200	3.0000
32	50.800	2.0000	53.975	2.1250	57.150	2.2500	60.325	2.3750	63.500	2.5000	69.850	2.7500	76.200	3.0000

Contact

USA: KAMATICS CORPORATION 1330 Blue Hills Avenue Bloomfield, CT 06002 USA | **Tel:** +1 860 243 9704 | **E-mail:** KSB@kaman.com
GERMANY: RWG GERMANY GmbH Medbacher Weg 1 D-91315 Höchstadt a. d. Aisch | **Tel:** +49 (91 93) 50105 100 | **E-mail:** RWG@kaman.com

Journal Bearings

FBPA1 / FBPA2

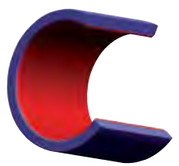

- Self-Lubricating
- Aluminium
- CRES
- Cylindrical Type

Schematic Drawing

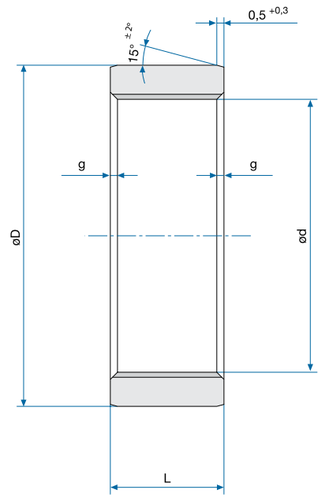

Specifications

Diameter Code	Nominal Diameter		d		D		g x 45° Max.		Length L -0.127 mm / -0.381 mm -0.0050 Inch / -0.0150 Inch			
									05		06	
	mm	Inch	mm	Inch	mm	Inch	mm	Inch	mm	Inch	mm	Inch
04	6.350	0.2500	6.358 to 6.380	0.2503 to 0.2512	9.538 to 9.550	0.3755 to 0.3760	0.250	0.0098	3.970	0.1563	4.760	0.1874
05	7.940	0.3126	7.950 to 7.973	0.3130 to 0.3139	11.128 to 11.140	0.4381 to 0.4386	0.250	0.0098	3.970	0.1563	4.760	0.1874
06	9.520	0.3748	9.540 to 9.563	0.3756 to 0.3765	12.715 to 12.730	0.5006 to 0.5012	0.250	0.0098	-	-	4.760	0.1874
07	11.110	0.4374	11.164 to 11.188	0.4395 to 0.4405	15.900 to 15.924	0.6260 to 0.6269	0.250	0.0098	-	-	4.760	0.1874
08	12.700	0.5000	12.715 to 12.741	0.5006 to 0.5016	17.483 to 17.496	0.6883 to 0.6888	0.250	0.0098	-	-	4.760	0.1874
10	15.870	0.6248	15.893 to 15.918	0.6257 to 0.6267	20.660 to 20.673	0.8134 to 0.8139	0.250	0.0098	-	-	4.760	0.1874
12	19.050	0.7500	19.070 to 19.101	0.7508 to 0.7520	23.835 to 23.848	0.9384 to 0.9389	0.250	0.0098	-	-	-	-
14	22.220	0.8748	22.248 to 22.278	0.8759 to 0.8771	27.013 to 27.026	1.0635 to 1.0640	0.510	0.0201	-	-	-	-
16	25.400	1.0000	25.425 to 25.456	1.0010 to 1.0022	30.188 to 30.201	1.1885 to 1.1890	0.510	0.0201	-	-	-	-
18	28.570	1.1248	28.608 to 28.649	1.1263 to 1.1279	33.368 to 33.383	1.3137 to 1.3143	0.510	0.0201	-	-	-	-
20	31.750	1.2500	31.780 to 31.821	1.2512 to 1.2528	38.133 to 38.148	1.5013 to 1.5019	0.510	0.0201	-	-	-	-
22	34.920	1.3748	34.958 to 34.999	1.3763 to 1.3779	41.308 to 41.323	1.6263 to 1.6269	0.510	0.0201	-	-	-	-
24	38.100	1.5000	38.133 to 38.174	1.5013 to 1.5029	44.483 to 44.498	1.7513 to 1.7519	0.510	0.0201	-	-	-	-
28	44.450	1.7500	44.493 to 44.534	1.7517 to 1.7533	50.841 to 50.858	2.0016 to 2.0023	0.510	0.0201	-	-	-	-
32	50.800	2.0000	50.843 to 50.889	2.0017 to 2.0035	57.191 to 57.208	2.2516 to 2.2523	0.510	0.0201	-	-	-	-

Designation

FBPA
Number of Standard

2
Material

08
Diameter Code

010
Length Code

Part Number Example
FBPA 2 - 08 10

Bearing Materials:

Material
1: EN3490 / 1.4044.6 / AISI431
2: EN2086 / 3.1924 / Alloy 2618A; Anodized

Liner
FRASLIP F per EN2311 / SAE AS81934

Technical Specification
AS8943

** Inch dimensions are for reference only. | * Permanently marked in non-functional area.*

Specifications

FBPA1 / FBPA2

Diameter Code	Length L -0.127 mm / -0.381 mm -0.0050 Inch / -0.0150 Inch															
	08		10		12		14		16		18		20		24	
	mm	Inch	mm	Inch	mm	Inch	mm	Inch	mm	Inch	mm	Inch	mm	Inch	mm	Inch
04	6.350	0.2500	7.940	0.3126	9.520	0.3748	11.110	0.4374	12.700	0.5000	-	-	-	-	-	-
05	6.350	0.2500	7.940	0.3126	9.520	0.3748	11.110	0.4374	12.700	0.5000	14.287	0.5625	15.870	0.6248	-	-
06	6.350	0.2500	7.940	0.3126	9.520	0.3748	11.110	0.4374	12.700	0.5000	14.287	0.5625	15.870	0.6248	19.050	0.7500
07	6.350	0.2500	7.940	0.3126	9.520	0.3748	11.110	0.4374	12.700	0.5000	14.287	0.5625	15.870	0.6248	19.050	0.7500
08	6.350	0.2500	7.940	0.3126	9.520	0.3748	11.110	0.4374	12.700	0.5000	14.287	0.5625	15.870	0.6248	19.050	0.7500
10	6.350	0.2500	7.940	0.3126	9.520	0.3748	11.110	0.4374	12.700	0.5000	14.287	0.5625	15.870	0.6248	19.050	0.7500
12	6.350	0.2500	7.940	0.3126	9.520	0.3748	11.110	0.4374	12.700	0.5000	14.287	0.5625	15.870	0.6248	19.050	0.7500
14	6.350	0.2500	7.940	0.3126	9.520	0.3748	11.110	0.4374	12.700	0.5000	14.287	0.5625	15.870	0.6248	19.050	0.7500
16	6.350	0.2500	7.940	0.3126	9.520	0.3748	11.110	0.4374	12.700	0.5000	14.287	0.5625	15.870	0.6248	19.050	0.7500
18	6.350	0.2500	7.940	0.3126	9.520	0.3748	11.110	0.4374	12.700	0.5000	14.287	0.5625	15.870	0.6248	19.050	0.7500
20	-	-	-	-	9.520	0.3748	11.110	0.4374	12.700	0.5000	14.287	0.5625	15.870	0.6248	19.050	0.7500
22	-	-	-	-	9.520	0.3748	11.110	0.4374	12.700	0.5000	14.287	0.5625	15.870	0.6248	19.050	0.7500
24	-	-	-	-	9.520	0.3748	11.110	0.4374	12.700	0.5000	14.287	0.5625	15.870	0.6248	19.050	0.7500
28	-	-	-	-	9.520	0.3748	11.110	0.4374	12.700	0.5000	14.287	0.5625	15.870	0.6248	19.050	0.7500
32	-	-	-	-	-	-	-	-	12.700	0.5000	14.287	0.5625	15.870	0.6248	19.050	0.7500

Diameter Code	Length L -0.127 mm / -0.381 mm -0.0050 Inch / -0.0150 Inch															
	28		32		40		44		48		64		80		96	
	mm	Inch	mm	Inch	mm	Inch	mm	Inch	mm	Inch	mm	Inch	mm	Inch	mm	Inch
04	-	-	-	-	-	-	-	-	-	-	-	-	-	-	-	-
05	-	-	-	-	-	-	-	-	-	-	-	-	-	-	-	-
06	22.220	0.8748	-	-	-	-	-	-	-	-	-	-	-	-	-	-
07	22.220	0.8748	-	-	-	-	-	-	-	-	-	-	-	-	-	-
08	22.220	0.8748	25.400	1.0000	-	-	-	-	-	-	-	-	-	-	-	-
10	22.220	0.8748	25.400	1.0000	31.750	1.2500	34.925	1.3750	-	-	-	-	-	-	-	-
12	22.220	0.8748	25.400	1.0000	31.750	1.2500	34.925	1.3750	-	-	-	-	-	-	-	-
14	22.220	0.8748	25.400	1.0000	31.750	1.2500	34.925	1.3750	-	-	-	-	-	-	-	-
16	22.220	0.8748	25.400	1.0000	31.750	1.2500	34.925	1.3750	38.100	1.5000	-	-	-	-	-	-
18	22.220	0.8748	25.400	1.0000	31.750	1.2500	34.925	1.3750	38.100	1.5000	50.800	2.0000	-	-	-	-
20	22.220	0.8748	25.400	1.0000	31.750	1.2500	34.925	1.3750	38.100	1.5000	50.800	2.0000	-	-	-	-
22	22.220	0.8748	25.400	1.0000	31.750	1.2500	34.925	1.3750	38.100	1.5000	50.800	2.0000	63.500	2.5000	-	-
24	22.220	0.8748	25.400	1.0000	31.750	1.2500	34.925	1.3750	38.100	1.5000	50.800	2.0000	63.500	2.5000	76.200	3.0000
28	22.220	0.8748	25.400	1.0000	31.750	1.2500	34.925	1.3750	38.100	1.5000	50.800	2.0000	63.500	2.5000	76.200	3.0000
32	22.220	0.8748	25.400	1.0000	31.750	1.2500	34.925	1.3750	38.100	1.5000	50.800	2.0000	63.500	2.5000	76.200	3.0000

NOTES

Static Limit Load C_s:

FBPA1: $C_s = 0.541 \cdot d \cdot (L - 2.54)$ [kN]
FBPA2: $C_s = 0.345 \cdot d \cdot (L - 2.54)$ [kN]

Contact

USA: KAMATICS CORPORATION 1330 Blue Hills Avenue Bloomfield, CT 06002 USA | **Tel:** +1 860 243 9704 | **E-mail:** KSB@kaman.com
GERMANY: RWG GERMANY GmbH Medbacher Weg 1 D-91315 Höchstadt a. d. Aisch | **Tel:** +49 (91 93) 50105 100 | **E-mail:** RWG@kaman.com

Journal Bearings

EN2285

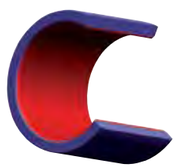

- Self-Lubricating
- Aluminium
- Cylindrical Type
- According to Specification EN2311 / SAE AS81934

Specifications

Diameter Code	d		Δ dmp		D		Δ Dmp	
	mm	Inch	mm	Inch	mm	Inch	mm	Inch
06	6.000	0.2362	+0.004 to +0.022	+0.0002 to +0.0009	10.000	0.3937	+0.015 to +0.024	+0.0006 to +0.0009
08	8.000	0.3150	+0.005 to +0.027	+0.0002 to +0.0011	12.000	0.4724	+0.018 to +0.029	+0.0007 to +0.0011
10	10.000	0.3937	+0.005 to +0.027	+0.0002 to +0.0011	14.000	0.5512	+0.018 to +0.029	+0.0007 to +0.0011
12	12.000	0.4724	+0.006 to +0.033	+0.0002 to +0.0013	16.000	0.6299	+0.018 to +0.029	+0.0007 to +0.0011
15	15.000	0.5906	+0.006 to +0.033	+0.0002 to +0.0013	19.000	0.7480	+0.022 to +0.035	+0.0009 to +0.0014
16	16.000	0.6299	+0.006 to +0.033	+0.0002 to +0.0013	20.000	0.7874	+0.022 to +0.035	+0.0009 to +0.0014
18	18.000	0.7087	+0.006 to +0.033	+0.0002 to +0.0013	22.000	0.8661	+0.022 to +0.035	+0.0009 to +0.0014
20	20.000	0.7874	+0.007 to +0.040	+0.0003 to +0.0016	25.000	0.9843	+0.022 to +0.035	+0.0009 to +0.0014
22	22.000	0.8661	+0.007 to +0.040	+0.0003 to +0.0016	26.000	1.0236	+0.022 to +0.035	+0.0009 to +0.0014
25	25.000	0.9843	+0.007 to +0.040	+0.0003 to +0.0016	30.000	1.1811	+0.022 to +0.035	+0.0009 to +0.0014
28	28.000	1.1024	+0.007 to +0.040	+0.0003 to +0.0016	34.000	1.3386	+0.026 to +0.042	+0.0010 to +0.0016
30	30.000	1.1811	+0.007 to +0.040	+0.0003 to +0.0016	36.000	1.4173	+0.026 to +0.042	+0.0010 to +0.0016
32	32.000	1.2598	+0.009 to +0.048	+0.0004 to +0.0019	38.000	1.4961	+0.026 to +0.042	+0.0010 to +0.0016
35	35.000	1.3780	+0.009 to +0.048	+0.0004 to +0.0019	42.000	1.6535	+0.026 to +0.042	+0.0010 to +0.0016
36	36.000	1.4173	+0.009 to +0.048	+0.0004 to +0.0019	43.000	1.6929	+0.026 to +0.042	+0.0010 to +0.0016
38	38.000	1.4961	+0.009 to +0.048	+0.0004 to +0.0019	45.000	1.7717	+0.026 to +0.042	+0.0010 to +0.0016
40	40.000	1.5748	+0.009 to +0.048	+0.0004 to +0.0019	48.000	1.8898	+0.026 to +0.042	+0.0010 to +0.0016
45	45.000	1.7717	+0.009 to +0.048	+0.0004 to +0.0019	52.000	2.0472	+0.032 to +0.051	+0.0013 to +0.0020
50	50.000	1.9685	+0.009 to +0.048	+0.0004 to +0.0019	58.000	2.2835	+0.032 to +0.051	+0.0013 to +0.0020

Designation

EN2285	12	08	A
Number of Standard	Diameter Code	Length Code	Bonded Liner Technology

Part Number Example
EN2285 - 12 08 A

Bearing Materials:

Material
EN2086 / 3.1924 / Alloy 2618A; Anodized

Liner
FRASLIP F per EN2311 / SAE AS81934

Technical Specification
EN2311 / SAE AS81934

** Inch dimensions are for reference only. | * Permanently marked in non-functional area.*

Schematic Drawing

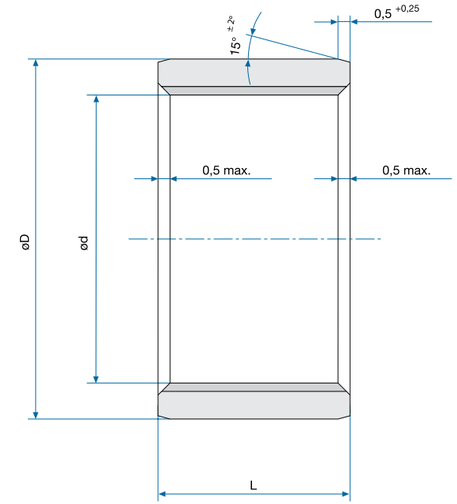

Specifications

EN2285

Diameter Code	Length L -0.1 mm / -0.4 mm -0.0039 Inch / -0.0157 Inch													
	06		08		10		12		15		16		18	
	mm	Inch	mm	Inch	mm	Inch	mm	Inch	mm	Inch	mm	Inch	mm	Inch
06	6.000	0.2362	-	-	-	-	-	-	-	-	-	-	-	-
08	6.000	0.2362	8.000	0.3150	-	-	-	-	-	-	-	-	-	-
10	6.000	0.2362	8.000	0.3150	10.000	0.3937	-	-	-	-	-	-	-	-
12	6.000	0.2362	8.000	0.3150	10.000	0.3937	12.000	0.4724	-	-	-	-	-	-
15	-	-	8.000	0.3150	10.000	0.3937	12.000	0.4724	15.000	0.5906	-	-	-	-
16	-	-	8.000	0.3150	10.000	0.3937	12.000	0.4724	15.000	0.5906	16.000	0.6299	-	-
18	-	-	-	-	10.000	0.3937	12.000	0.4724	15.000	0.5906	-	-	18.000	0.7087
20	-	-	-	-	10.000	0.3937	12.000	0.4724	15.000	0.5906	-	-	-	-
22	-	-	-	-	-	-	12.000	0.4724	15.000	0.5906	-	-	-	-
25	-	-	-	-	-	-	12.000	0.4724	15.000	0.5906	-	-	-	-
28	-	-	-	-	-	-	-	-	15.000	0.5906	-	-	-	-
30	-	-	-	-	-	-	-	-	15.000	0.5906	-	-	-	-
32	-	-	-	-	-	-	-	-	15.000	0.5906	-	-	-	-
35	-	-	-	-	-	-	-	-	-	-	-	-	-	-
36	-	-	-	-	-	-	-	-	-	-	-	-	-	-
38	-	-	-	-	-	-	-	-	-	-	-	-	-	-
40	-	-	-	-	-	-	-	-	-	-	-	-	-	-
45	-	-	-	-	-	-	-	-	-	-	-	-	-	-
50	-	-	-	-	-	-	-	-	-	-	-	-	-	-

NOTES

Static Limit Load C_s = 0.206 · d · (L - 2) [kN]

EN2285 continued on pg 288. ►

Specifications

EN2285

Diameter Code	Length L -0.1 mm / -0.4 mm -0.0039 Inch / -0.0157 Inch											
	20		22		25		28		30		32	
	mm	Inch	mm	Inch	mm	Inch	mm	Inch	mm	Inch	mm	Inch
06	-	-	-	-	-	-	-	-	-	-	-	-
08	-	-	-	-	-	-	-	-	-	-	-	-
10	-	-	-	-	-	-	-	-	-	-	-	-
12	-	-	-	-	-	-	-	-	-	-	-	-
15	-	-	-	-	-	-	-	-	-	-	-	-
16	-	-	-	-	-	-	-	-	-	-	-	-
18	-	-	-	-	-	-	-	-	-	-	-	-
20	20.000	0.7874	-	-	-	-	-	-	-	-	-	-
22	20.000	0.7874	22.000	0.8661	-	-	-	-	-	-	-	-
25	20.000	0.7874	22.000	0.8661	25.000	0.9843	-	-	-	-	-	-
28	20.000	0.7874	22.000	0.8661	25.000	0.9843	28.000	1.1024	-	-	-	-
30	20.000	0.7874	22.000	0.8661	25.000	0.9843	-	-	30.000	1.1811	-	-
32	20.000	0.7874	22.000	0.8661	25.000	0.9843	-	-	30.000	1.1811	32.000	1.2598
35	20.000	0.7874	22.000	0.8661	25.000	0.9843	-	-	30.000	1.1811	-	-
36	20.000	0.7874	22.000	0.8661	25.000	0.9843	-	-	30.000	1.1811	-	-
38	20.000	0.7874	22.000	0.8661	25.000	0.9843	-	-	30.000	1.1811	-	-
40	20.000	0.7874	-	-	25.000	0.9843	-	-	30.000	1.1811	-	-
45	-	-	-	-	25.000	0.9843	-	-	30.000	1.1811	-	-
50	-	-	-	-	25.000	0.9843	-	-	30.000	1.1811	-	-

Specifications

EN2285

Diameter Code	Length L -0.1 mm / -0.4 mm -0.0039 Inch / -0.0157 Inch							
	35		40		45		50	
	mm	Inch	mm	Inch	mm	Inch	mm	Inch
06	-	-	-	-	-	-	-	-
08	-	-	-	-	-	-	-	-
10	-	-	-	-	-	-	-	-
12	-	-	-	-	-	-	-	-
15	-	-	-	-	-	-	-	-
16	-	-	-	-	-	-	-	-
18	-	-	-	-	-	-	-	-
20	-	-	-	-	-	-	-	-
22	-	-	-	-	-	-	-	-
25	-	-	-	-	-	-	-	-
28	-	-	-	-	-	-	-	-
30	-	-	-	-	-	-	-	-
32	-	-	-	-	-	-	-	-
35	35.000	1.3780	-	-	-	-	-	-
36	35.000	1.3780	-	-	-	-	-	-
38	35.000	1.3780	40.000	1.5748	-	-	-	-
40	35.000	1.3780	40.000	1.5748	45.000	1.7717	-	-
45	35.000	1.3780	40.000	1.5748	45.000	1.7717	50.000	1.9685
50	35.000	1.3780	40.000	1.5748	45.000	1.7717	50.000	1.9685

Contact

USA: KAMATICS CORPORATION 1330 Blue Hills Avenue Bloomfield, CT 06002 USA | **Tel:** +1 860 243 9704 | **Email:** KSB@kaman.com
GERMANY: RWG GERMANY GmbH Medbacher Weg 1 D-91315 Höchstadt a. d. Aisch | **Tel:** +49 (91 93) 50105 100 | **E-Mail:** RWG@kaman.com

Journal Bearings

EN2287

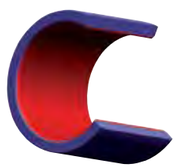

- Self-Lubricating
- CRES
- Cylindrical Type
- According to Specification EN2311 / SAE AS81934

Specifications

Diameter Code	d		Δ dmp		D		Δ Dmp	
	mm	Inch	mm	Inch	mm	Inch	mm	Inch
06	6.000	0.2362	+0.004 to +0.022	+0.0002 to +0.0009	10.000	0.3937	+0.015 to +0.024	+0.0006 to +0.0009
08	8.000	0.3150	+0.005 to +0.027	+0.0002 to +0.0011	12.000	0.4724	+0.018 to +0.029	+0.0007 to +0.0011
10	10.000	0.3937	+0.005 to +0.027	+0.0002 to +0.0011	14.000	0.5512	+0.018 to +0.029	+0.0007 to +0.0011
12	12.000	0.4724	+0.006 to +0.033	+0.0002 to +0.0013	16.000	0.6299	+0.018 to +0.029	+0.0007 to +0.0011
15	15.000	0.5906	+0.006 to +0.033	+0.0002 to +0.0013	19.000	0.7480	+0.022 to +0.035	+0.0009 to +0.0014
16	16.000	0.6299	+0.006 to +0.033	+0.0002 to +0.0013	20.000	0.7874	+0.022 to +0.035	+0.0009 to +0.0014
18	18.000	0.7087	+0.006 to +0.033	+0.0002 to +0.0013	22.000	0.8661	+0.022 to +0.035	+0.0009 to +0.0014
20	20.000	0.7874	+0.007 to +0.040	+0.0003 to +0.0016	25.000	0.9843	+0.022 to +0.035	+0.0009 to +0.0014
22	22.000	0.8661	+0.007 to +0.040	+0.0003 to +0.0016	26.000	1.0236	+0.022 to +0.035	+0.0009 to +0.0014
25	25.000	0.9843	+0.007 to +0.040	+0.0003 to +0.0016	30.000	1.1811	+0.022 to +0.035	+0.0009 to +0.0014
28	28.000	1.1024	+0.007 to +0.040	+0.0003 to +0.0016	34.000	1.3386	+0.026 to +0.046	+0.0010 to +0.0018
30	30.000	1.1811	+0.007 to +0.040	+0.0003 to +0.0016	36.000	1.4173	+0.026 to +0.046	+0.0010 to +0.0018
32	32.000	1.2598	+0.009 to +0.048	+0.0004 to +0.0019	38.000	1.4961	+0.026 to +0.046	+0.0010 to +0.0018
35	35.000	1.3780	+0.009 to +0.048	+0.0004 to +0.0019	42.000	1.6535	+0.026 to +0.046	+0.0010 to +0.0018
36	36.000	1.4173	+0.009 to +0.048	+0.0004 to +0.0019	43.000	1.6929	+0.026 to +0.046	+0.0010 to +0.0018
38	38.000	1.4961	+0.009 to +0.048	+0.0004 to +0.0019	45.000	1.7717	+0.026 to +0.046	+0.0010 to +0.0018
40	40.000	1.5748	+0.009 to +0.048	+0.0004 to +0.0019	48.000	1.8898	+0.026 to +0.046	+0.0010 to +0.0018
45	45.000	1.7717	+0.009 to +0.048	+0.0004 to +0.0019	52.000	2.0472	+0.032 to +0.051	+0.0013 to +0.0020
50	50.000	1.9685	+0.009 to +0.048	+0.0004 to +0.0019	58.000	2.2835	+0.032 to +0.051	+0.0013 to +0.0020

Designation

EN2287	12	08	A
Number of EN Standard	Diameter Code	Length Code	Bonded Liner Technology

Part Number Example
EN2287 - 12 08 A

Bearing Materials:

Material
EN3490 / 1.4044.6 / AISI 431

Liner
FRASLIP F per EN2311 / SAE AS81934

Technical Specification
EN2311 / SAE AS81934

** Inch dimensions are for reference only. | * Permanently marked in non-functional area.*

Schematic Drawing

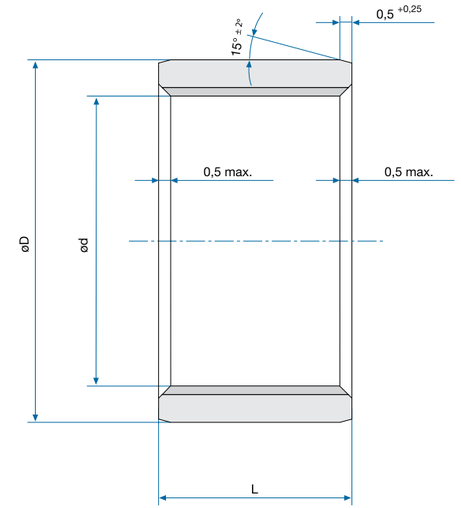

Specifications

EN2287

Diameter Code	Length L -0.100 mm / -0.4 mm -0.0039 Inch / -0.0157 Inch													
	06		08		10		12		15		16		18	
	mm	Inch	mm	Inch	mm	Inch	mm	Inch	mm	Inch	mm	Inch	mm	Inch
06	6.000	0.2362	-	-	-	-	-	-	-	-	-	-	-	-
08	6.000	0.2362	8.000	0.3150	-	-	-	-	-	-	-	-	-	-
10	6.000	0.2362	8.000	0.3150	10.000	0.3937	-	-	-	-	-	-	-	-
12	6.000	0.2362	8.000	0.3150	10.000	0.3937	12.000	0.4724	-	-	-	-	-	-
15	-	-	8.000	0.3150	10.000	0.3937	12.000	0.4724	15.000	0.5906	16.000	0.6299	-	-
16	-	-	8.000	0.3150	10.000	0.3937	12.000	0.4724	15.000	0.5906	16.000	0.6299	18.000	0.7087
18	-	-	-	-	10.000	0.3937	12.000	0.4724	15.000	0.5906	16.000	0.6299	18.000	0.7087
20	-	-	-	-	10.000	0.3937	12.000	0.4724	15.000	0.5906	16.000	0.6299	18.000	0.7087
22	-	-	-	-	-	-	12.000	0.4724	15.000	0.5906	16.000	0.6299	18.000	0.7087
25	-	-	-	-	-	-	12.000	0.4724	15.000	0.5906	16.000	0.6299	18.000	0.7087
28	-	-	-	-	-	-	-	-	15.000	0.5906	16.000	0.6299	18.000	0.7087
30	-	-	-	-	-	-	-	-	15.000	0.5906	16.000	0.6299	18.000	0.7087
32	-	-	-	-	-	-	-	-	15.000	0.5906	16.000	0.6299	18.000	0.7087
35	-	-	-	-	-	-	-	-	-	-	16.000	0.6299	18.000	0.7087
36	-	-	-	-	-	-	-	-	-	-	-	-	18.000	0.7087
38	-	-	-	-	-	-	-	-	-	-	-	-	-	-
40	-	-	-	-	-	-	-	-	-	-	-	-	-	-
45	-	-	-	-	-	-	-	-	-	-	-	-	-	-
50	-	-	-	-	-	-	-	-	-	-	-	-	-	-

NOTES

Static Limit Load C_s:

$C_s = 0.43 \cdot d \cdot (L - 2)$ [kN]

EN2287 continued on pg 292. ►

Specifications

EN2287

Diameter Code	Length L -0.100 mm / -0.4 mm -0.0039 Inch / -0.0157 Inch											
	20		22		25		28		30		32	
	mm	Inch	mm	Inch	mm	Inch	mm	Inch	mm	Inch	mm	Inch
06	-	-	-	-	-	-	-	-	-	-	-	-
08	-	-	-	-	-	-	-	-	-	-	-	-
10	-	-	-	-	-	-	-	-	-	-	-	-
12	-	-	-	-	-	-	-	-	-	-	-	-
15	-	-	-	-	-	-	-	-	-	-	-	-
16	-	-	-	-	-	-	-	-	-	-	-	-
18	20.000	0.7874	-	-	-	-	-	-	-	-	-	-
20	20.000	0.7874	22.000	0.8661	-	-	-	-	-	-	-	-
22	20.000	0.7874	22.000	0.8661	-	-	-	-	-	-	-	-
25	20.000	0.7874	22.000	0.8661	25.000	0.9843	-	-	-	-	-	-
28	20.000	0.7874	22.000	0.8661	25.000	0.9843	28.000	1.1024	-	-	-	-
30	20.000	0.7874	22.000	0.8661	25.000	0.9843	28.000	1.1024	30.000	1.1811	-	-
32	20.000	0.7874	22.000	0.8661	25.000	0.9843	28.000	1.1024	30.000	1.1811	32.000	1.2598
35	20.000	0.7874	22.000	0.8661	25.000	0.9843	28.000	1.1024	30.000	1.1811	32.000	1.2598
36	20.000	0.7874	22.000	0.8661	25.000	0.9843	28.000	1.1024	30.000	1.1811	32.000	1.2598
38	20.000	0.7874	22.000	0.8661	25.000	0.9843	28.000	1.1024	30.000	1.1811	32.000	1.2598
40	20.000	0.7874	22.000	0.8661	25.000	0.9843	28.000	1.1024	30.000	1.1811	32.000	1.2598
45	-	-	22.000	0.8661	25.000	0.9843	28.000	1.1024	30.000	1.1811	32.000	1.2598
50	-	-	-	-	25.000	0.9843	28.000	1.1024	30.000	1.1811	32.000	1.2598

Specifications

EN2287

Diameter Code	Length L -0.100 mm / -0.4 mm -0.0039 Inch / -0.0157 Inch											
	35		36		38		40		45		50	
	mm	Inch	mm	Inch	mm	Inch	mm	Inch	mm	Inch	mm	Inch
06	-	-	-	-	-	-	-	-	-	-	-	-
08	-	-	-	-	-	-	-	-	-	-	-	-
10	-	-	-	-	-	-	-	-	-	-	-	-
12	-	-	-	-	-	-	-	-	-	-	-	-
15	-	-	-	-	-	-	-	-	-	-	-	-
16	-	-	-	-	-	-	-	-	-	-	-	-
18	-	-	-	-	-	-	-	-	-	-	-	-
20	-	-	-	-	-	-	-	-	-	-	-	-
22	-	-	-	-	-	-	-	-	-	-	-	-
25	-	-	-	-	-	-	-	-	-	-	-	-
28	-	-	-	-	-	-	-	-	-	-	-	-
30	-	-	-	-	-	-	-	-	-	-	-	-
32	-	-	-	-	-	-	-	-	-	-	-	-
35	35.000	1.3780	-	-	-	-	-	-	-	-	-	-
36	35.000	1.3780	36.000	1.4173	-	-	-	-	-	-	-	-
38	35.000	1.3780	36.000	1.4173	38.000	1.4961	-	-	-	-	-	-
40	35.000	1.3780	36.000	1.4173	38.000	1.4961	40.000	1.5748	-	-	-	-
45	35.000	1.3780	36.000	1.4173	38.000	1.4961	40.000	1.5748	45.000	1.7717	-	-
50	35.000	1.3780	36.000	1.4173	38.000	1.4961	40.000	1.5748	45.000	1.7717	50.000	1.9685

Contact

USA: KAMATICS CORPORATION 1330 Blue Hills Avenue Bloomfield, CT 06002 USA | **Tel:** +1 860 243 9704 | **Email:** KSB@kaman.com
GERMANY: RWG GERMANY GmbH Medbacher Weg 1 D-91315 Höchstadt a. d. Aisch | **Tel:** +49 (91 93) 50105 100 | **E-Mail:** RWG@kaman.com

Journal Bearings

ABS2042…D

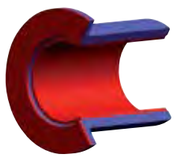

- Self-Lubricating
- Aluminium
- Flanged Type
- For Titanium Shaft
- According to Specification ABS2045 / EN2311

Specifications

Diameter Code	Nominal Diameter		d		D		L_1		D_1		g	
			-0.025	-0.0010	±0.013	±0.0005	-0.130	-0.0051	-0.510	-0.0201		
	mm	Inch	mm	Inch	mm	Inch	mm	Inch	mm	Inch	mm	Inch
04	6.350	0.2500	6.388	0.2515	9.550	0.3760	1.600	0.0630	19.050	0.7500	0.710	0.0280
05	7.938	0.3125	7.976	0.3140	11.140	0.4386	1.600	0.0630	20.640	0.8126	0.710	0.0280
06	9.525	0.3750	9.563	0.3765	12.730	0.5012	1.600	0.0630	22.230	0.8752	0.710	0.0280
07	11.113	0.4375	11.151	0.4390	14.321	0.5638	1.600	0.0630	23.830	0.9382	0.710	0.0280
08	12.700	0.5000	12.738	0.5015	15.913	0.6265	1.600	0.0630	25.400	1.0000	0.710	0.0280
09	14.288	0.5625	14.326	0.5640	17.506	0.6892	1.600	0.0630	28.580	1.1252	0.710	0.0280
10	15.875	0.6250	15.913	0.6265	20.681	0.8142	1.600	0.0630	31.750	1.2500	0.710	0.0280
11	17.463	0.6875	17.501	0.6890	22.268	0.8767	1.600	0.0630	34.930	1.3752	0.710	0.0280
12	19.050	0.7500	19.088	0.7515	23.858	0.9393	1.600	0.0630	38.100	1.5000	0.710	0.0280
14	22.225	0.8750	22.263	0.8765	27.038	1.0645	1.600	0.0630	41.280	1.6252	0.990	0.0390
16	25.400	1.0000	25.438	1.0015	30.221	1.1898	1.600	0.0630	44.450	1.7500	0.990	0.0390
18	28.575	1.1250	28.613	1.1265	33.396	1.3148	2.390	0.0941	47.630	1.8752	0.990	0.0390
20	31.750	1.2500	31.788	1.2515	36.571	1.4398	2.390	0.0941	50.800	2.0000	0.990	0.0390
22	34.925	1.3750	34.963	1.3765	39.746	1.5648	2.390	0.0941	53.980	2.1252	0.990	0.0390
24	38.100	1.5000	38.138	1.5015	44.508	1.7523	2.390	0.0941	57.150	2.2500	0.990	0.0390
26	41.275	1.6250	41.313	1.6265	47.683	1.8773	2.390	0.0941	60.330	2.3752	0.990	0.0390
28	44.450	1.7500	44.488	1.7515	50.858	2.0023	2.390	0.0941	63.500	2.5000	0.990	0.0390
32	50.800	2.0000	50.838	2.0015	57.208	2.2523	2.390	0.0941	69.850	2.7500	0.990	0.0390

NOTES

Static Radial Limit Loads C_s:

$C_s = 0.29 \cdot d \cdot (L_2 - L_1 - 2)$ [kN]

Static Axial Limit Loads C_a:

$C_a = 0.16 \cdot [(D_1 - 1.5)^2 - (d + 2.5)^2]$ [kN]

Schematic Drawing

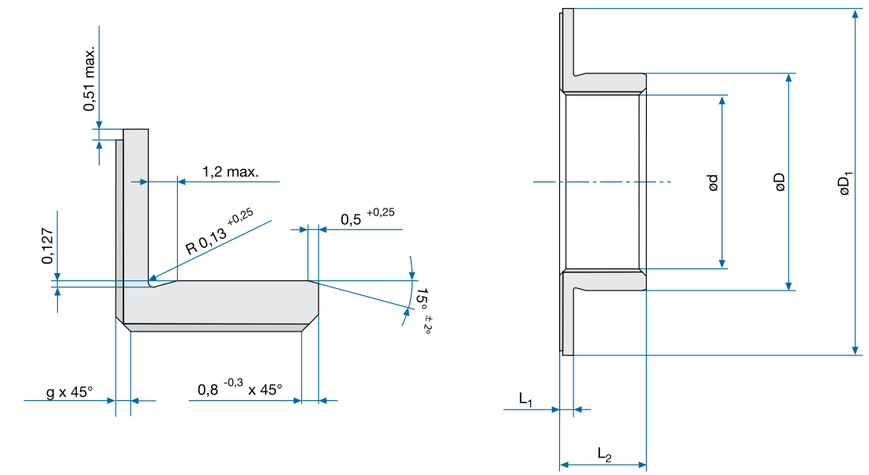

Specifications

ABS2042…D

Diameter Code	Length L -0.100 mm / -0.400 mm -0.0039 Inch / -0.0157 Inch															
	006		007		008		009		010		011		012		014	
	mm	Inch	mm	Inch	mm	Inch	mm	Inch	mm	Inch	mm	Inch	mm	Inch	mm	Inch
04	4.780	0.1882	5.560	0.2189	6.350	0.2500	7.140	0.2811	7.950	0.3130	8.740	0.3441	9.530	0.3752	11.130	0.4382
05	4.780	0.1882	5.560	0.2189	6.350	0.2500	7.140	0.2811	7.950	0.3130	8.740	0.3441	9.530	0.3752	11.130	0.4382
06	4.780	0.1882	5.560	0.2189	6.350	0.2500	7.140	0.2811	7.950	0.3130	8.740	0.3441	9.530	0.3752	11.130	0.4382
07	4.780	0.1882	5.560	0.2189	6.350	0.2500	7.140	0.2811	7.950	0.3130	8.740	0.3441	9.530	0.3752	11.130	0.4382
08	4.780	0.1882	5.560	0.2189	6.350	0.2500	7.140	0.2811	7.950	0.3130	8.740	0.3441	9.530	0.3752	11.110	0.4374
09	4.780	0.1882	5.560	0.2189	6.350	0.2500	7.140	0.2811	7.950	0.3130	8.740	0.3441	9.530	0.3752	11.130	0.4382
10	4.780	0.1882	5.560	0.2189	6.350	0.2500	7.140	0.2811	7.950	0.3130	8.740	0.3441	9.530	0.3752	11.130	0.4382
11	-	-	-	-	6.350	0.2500	7.140	0.2811	7.950	0.3130	8.740	0.3441	9.530	0.3752	11.130	0.4382
12	-	-	-	-	6.350	0.2500	7.140	0.2811	7.950	0.3130	8.740	0.3441	9.530	0.3752	11.130	0.4382
14	-	-	-	-	6.350	0.2500	7.140	0.2811	7.950	0.3130	8.740	0.3441	9.530	0.3752	11.130	0.4382
16	-	-	-	-	6.350	0.2500	7.140	0.2811	7.950	0.3130	8.740	0.3441	9.530	0.3752	11.130	0.4382
18	-	-	-	-	-	-	-	-	7.950	0.3130	8.740	0.3441	9.530	0.3752	11.130	0.4382
20	-	-	-	-	-	-	-	-	-	-	-	-	9.530	0.3752	11.130	0.4382
22	-	-	-	-	-	-	-	-	-	-	-	-	9.530	0.3752	11.130	0.4382
24	-	-	-	-	-	-	-	-	-	-	-	-	9.530	0.3752	11.130	0.4382
26	-	-	-	-	-	-	-	-	-	-	-	-	-	-	-	-
28	-	-	-	-	-	-	-	-	-	-	-	-	-	-	-	-
32	-	-	-	-	-	-	-	-	-	-	-	-	-	-	-	-

ABS2042…D continued on pg 296. ►

Specifications

ABS2042…D

Diameter Code	Length L -0.100 mm / -0.400 mm -0.0039 Inch / -0.0157 Inch													
	016		018		020		022		024		028		032	
	mm	Inch	mm	Inch	mm	Inch	mm	Inch	mm	Inch	mm	Inch	mm	Inch
04	12.700	0.5000	-	-	-	-	-	-	-	-	-	-	-	-
05	12.700	0.5000	14.300	0.5630	15.880	0.6252	-	-	-	-	-	-	-	-
06	12.700	0.5000	14.300	0.5630	15.880	0.6252	17.480	0.6882	19.050	0.7500	-	-	-	-
07	12.700	0.5000	14.300	0.5630	15.880	0.6252	17.480	0.6882	19.050	0.7500	22.230	0.8752	-	-
08	12.700	0.5000	14.300	0.5630	15.880	0.6252	17.480	0.6882	19.050	0.7500	22.230	0.8752	-	-
09	12.700	0.5000	14.300	0.5630	15.880	0.6252	17.480	0.6882	19.050	0.7500	22.230	0.8752	-	-
10	12.700	0.5000	14.300	0.5630	15.880	0.6252	17.480	0.6882	19.050	0.7500	22.230	0.8752	25.400	1.0000
11	12.700	0.5000	14.300	0.5630	15.880	0.6252	17.480	0.6882	19.050	0.7500	22.230	0.8752	25.400	1.0000
12	12.700	0.5000	14.300	0.5630	15.880	0.6252	17.480	0.6882	19.050	0.7500	22.230	0.8752	25.400	1.0000
14	12.700	0.5000	14.300	0.5630	15.880	0.6252	17.480	0.6882	19.050	0.7500	22.230	0.8752	25.400	1.0000
16	12.700	0.5000	14.300	0.5630	15.880	0.6252	17.480	0.6882	19.050	0.7500	22.230	0.8752	25.400	1.0000
18	12.700	0.5000	14.300	0.5630	15.880	0.6252	17.480	0.6882	19.050	0.7500	22.230	0.8752	25.400	1.0000
20	12.700	0.5000	14.300	0.5630	15.880	0.6252	17.480	0.6882	19.050	0.7500	22.230	0.8752	25.400	1.0000
22	12.700	0.5000	14.300	0.5630	15.880	0.6252	17.480	0.6882	19.050	0.7500	22.230	0.8752	25.400	1.0000
24	12.700	0.5000	14.300	0.5630	15.880	0.6252	17.480	0.6882	19.050	0.7500	22.230	0.8752	25.400	1.0000
26	12.700	0.5000	14.300	0.5630	15.880	0.6252	17.480	0.6882	19.050	0.7500	22.230	0.8752	25.400	1.0000
28	12.700	0.5000	14.300	0.5630	15.880	0.6252	17.480	0.6882	19.050	0.7500	22.230	0.8752	25.400	1.0000
32	12.700	0.5000	14.300	0.5630	15.880	0.6252	17.480	0.6882	19.050	0.7500	22.230	0.8752	25.400	1.0000

Designation

ABS2042A D
Number of Standard

04
Diameter Code

006
Length Code

Part Number Example
ABS2042A 04 D 006

Bearing Materials:

Material
EN2318 / 3.1354 T3511 / Alloy 2024; Anodized

Liner
FRASLIP F per EN2311 / SAE AS81934

Technical Specification
ABS2045

** Inch dimensions are for reference only. | * Permanently marked in non-functional area.*

Specifications

ABS2042…D

Diameter Code	Length L -0.100 mm / -0.400 mm -0.0039 Inch / -0.0157 Inch													
	036		040		044		048		052		056		060	
	mm	Inch	mm	Inch	mm	Inch	mm	Inch	mm	Inch	mm	Inch	mm	Inch
04	-	-	-	-	-	-	-	-	-	-	-	-	-	-
05	-	-	-	-	-	-	-	-	-	-	-	-	-	-
06	-	-	-	-	-	-	-	-	-	-	-	-	-	-
07	-	-	-	-	-	-	-	-	-	-	-	-	-	-
08	-	-	-	-	-	-	-	-	-	-	-	-	-	-
09	-	-	-	-	-	-	-	-	-	-	-	-	-	-
10	28.580	1.1252	31.750	1.2500	34.930	1.3752	-	-	-	-	-	-	-	-
11	28.580	1.1252	31.750	1.2500	34.930	1.3752	38.100	1.5000	41.280	1.6252	-	-	-	-
12	28.580	1.1252	31.750	1.2500	34.930	1.3752	38.100	1.5000	41.280	1.6252	-	-	-	-
14	28.580	1.1252	31.750	1.2500	34.930	1.3752	38.100	1.5000	41.280	1.6252	44.450	1.7500	47.630	1.8752
16	28.580	1.1252	31.750	1.2500	34.930	1.3752	38.100	1.5000	41.280	1.6252	44.450	1.7500	47.630	1.8752
18	28.580	1.1252	31.750	1.2500	34.930	1.3752	38.100	1.5000	41.280	1.6252	44.450	1.7500	47.630	1.8752
20	28.580	1.1252	31.750	1.2500	34.930	1.3752	38.100	1.5000	41.280	1.6252	44.450	1.7500	47.630	1.8752
22	28.580	1.1252	31.750	1.2500	34.930	1.3752	38.100	1.5000	41.280	1.6252	44.450	1.7500	47.630	1.8752
24	28.580	1.1252	31.750	1.2500	34.930	1.3752	38.100	1.5000	41.280	1.6252	44.450	1.7500	47.630	1.8752
26	28.580	1.1252	31.750	1.2500	34.930	1.3752	38.100	1.5000	41.280	1.6252	44.450	1.7500	47.630	1.8752
28	28.580	1.1252	31.750	1.2500	34.930	1.3752	38.100	1.5000	41.280	1.6252	44.450	1.7500	47.630	1.8752
32	28.580	1.1252	31.750	1.2500	34.930	1.3752	38.100	1.5000	41.280	1.6252	44.450	1.7500	47.630	1.8752

Diameter Code	Length L -0.100 mm / -0.400 mm -0.0039 Inch / -0.0157 Inch													
	064		068		072		076		080		088		096	
	mm	Inch	mm	Inch	mm	Inch	mm	Inch	mm	Inch	mm	Inch	mm	Inch
04	-	-	-	-	-	-	-	-	-	-	-	-	-	-
05	-	-	-	-	-	-	-	-	-	-	-	-	-	-
06	-	-	-	-	-	-	-	-	-	-	-	-	-	-
07	-	-	-	-	-	-	-	-	-	-	-	-	-	-
08	-	-	-	-	-	-	-	-	-	-	-	-	-	-
09	-	-	-	-	-	-	-	-	-	-	-	-	-	-
10	-	-	-	-	-	-	-	-	-	-	-	-	-	-
11	-	-	-	-	-	-	-	-	-	-	-	-	-	-
12	-	-	-	-	-	-	-	-	-	-	-	-	-	-
14	-	-	-	-	-	-	-	-	-	-	-	-	-	-
16	50.800	2.0000	-	-	-	-	-	-	-	-	-	-	-	-
18	50.800	2.0000	53.980	2.1252	-	-	-	-	-	-	-	-	-	-
20	50.800	2.0000	53.980	2.1252	-	-	-	-	-	-	-	-	-	-
22	50.800	2.0000	53.980	2.1252	-	-	-	-	-	-	-	-	-	-
24	50.800	2.0000	53.980	2.1252	57.150	2.2500	60.330	2.3752	63.500	2.5000	69.850	2.7500	-	-
26	50.800	2.0000	53.980	2.1252	57.150	2.2500	60.330	2.3752	63.500	2.5000	69.850	2.7500	76.200	3.0000
28	50.800	2.0000	53.980	2.1252	57.150	2.2500	60.330	2.3752	63.500	2.5000	69.850	2.7500	76.200	3.0000
32	50.800	2.0000	53.980	2.1252	57.150	2.2500	60.330	2.3752	63.500	2.5000	69.850	2.7500	76.200	3.0000

Contact

USA: KAMATICS CORPORATION 1330 Blue Hills Avenue Bloomfield, CT 06002 USA | **Tel:** +1 860 243 9704 | **E-mail:** KSB@kaman.com
GERMANY: RWG GERMANY GmbH Medbacher Weg 1 D-91315 Höchstadt a. d. Aisch | **Tel:** +49 (91 93) 50105 100 | **E-mail:** RWG@kaman.com

Journal Bearings

ABS2042…F

- Self-Lubricating
- CRES
- Flanged Type
- For Titanium Shaft
- According to Specification ABS2045 / EN2311

Specifications

Diameter Code	Nominal Diameter		d		D		L_1		D_1		g Max.		R	
			-0.025	-0.0010	±0.013	±0.0005	-0.130	-0.0051	-0.510	-0.0201			±0.130	±0.0051
	mm	Inch	mm	Inch	mm	Inch	mm	Inch	mm	Inch	mm	Inch	mm	Inch
04	6.350	0.2500	6.388	0.2515	9.550	0.3760	1.600	0.0630	12.700	0.5000	0.710	0.0280	0.250	0.0098
05	7.938	0.3125	7.976	0.3140	11.140	0.4386	1.600	0.0630	14.300	0.5630	0.710	0.0280	0.480	0.0189
06	9.525	0.3750	9.563	0.3765	12.730	0.5012	1.600	0.0630	15.880	0.6252	0.710	0.0280	0.650	0.0256
07	11.113	0.4375	11.151	0.4390	14.321	0.5638	1.600	0.0630	19.150	0.7539	0.710	0.0280	0.650	0.0256
08	12.700	0.5000	12.738	0.5015	15.913	0.6265	1.600	0.0630	22.230	0.8752	0.710	0.0280	0.650	0.0256
10	15.875	0.6250	15.913	0.6265	20.681	0.8142	1.600	0.0630	25.400	1.0000	0.710	0.0280	0.650	0.0256
11	17.463	0.6875	17.501	0.6890	22.268	0.8767	1.600	0.0630	27.000	1.0630	0.710	0.0280	0.650	0.0256
12	19.050	0.7500	19.088	0.7515	23.858	0.9393	1.600	0.0630	28.580	1.1252	0.710	0.0280	0.650	0.0256
14	22.225	0.8750	22.263	0.8765	27.038	1.0645	1.600	0.0630	31.750	1.2500	0.990	0.0390	0.650	0.0256
16	25.400	1.0000	25.438	1.0015	30.221	1.1898	1.600	0.0630	34.930	1.3752	0.990	0.0390	0.650	0.0256
18	28.575	1.1250	28.613	1.1265	33.396	1.3148	2.390	0.0941	41.280	1.6252	0.990	0.0390	0.650	0.0256
20	31.750	1.2500	31.788	1.2515	36.571	1.4398	2.390	0.0941	44.450	1.7500	0.990	0.0390	0.650	0.0256
22	34.925	1.3750	34.963	1.3765	39.746	1.5648	2.390	0.0941	47.630	1.8752	0.990	0.0390	0.650	0.0256
24	38.100	1.5000	38.138	1.5015	44.508	1.7523	2.390	0.0941	50.800	2.0000	0.990	0.0390	0.650	0.0256
28	44.450	1.7500	44.488	1.7515	50.858	2.0023	2.390	0.0941	57.150	2.2500	0.990	0.0390	0.650	0.0256
32	50.800	2.0000	50.838	2.0015	57.208	2.2523	2.390	0.0941	63.500	2.5000	0.990	0.0390	0.650	0.0256

NOTES

Static Radial Limit Loads C_s:

$C_s = 0.29 \cdot d \cdot (L_2 - L_1 - 2)$ [kN]

Static Axial Limit Loads Ca:

$C_a = 0.16 \cdot [(D_1 - 1.5)^2 - (d + 2.5)^2]$ [kN]

Schematic Drawing

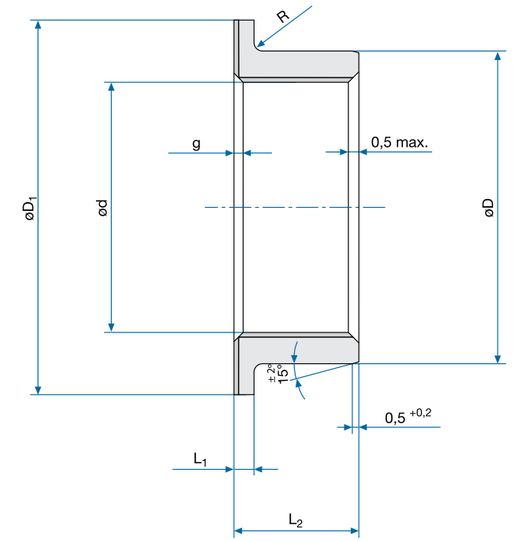

Specifications

ABS2042…F

Diameter Code	Length L -0.100 mm / -0.400 mm -0.0039 Inch / -0.0157 Inch															
	006		007		008		009		010		011		012		014	
	mm	Inch	mm	Inch	mm	Inch	mm	Inch	mm	Inch	mm	Inch	mm	Inch	mm	Inch
04	4.780	0.1882	5.560	0.2189	6.350	0.2500	7.140	0.2811	7.950	0.3130	8.740	0.3441	9.530	0.3752	11.130	0.4382
05	4.780	0.1882	5.560	0.2189	6.350	0.2500	7.140	0.2811	7.950	0.3130	8.740	0.3441	9.530	0.3752	11.130	0.4382
06	4.780	0.1882	5.560	0.2189	6.350	0.2500	7.140	0.2811	7.950	0.3130	8.740	0.3441	9.530	0.3752	11.130	0.4382
07	4.780	0.1882	5.560	0.2189	6.350	0.2500	7.140	0.2811	7.950	0.3130	8.740	0.3441	9.530	0.3752	11.130	0.4382
08	4.780	0.1882	5.560	0.2189	6.350	0.2500	7.140	0.2811	7.950	0.3130	8.740	0.3441	9.530	0.3752	11.110	0.4374
10	4.780	0.1882	5.560	0.2189	6.350	0.2500	7.140	0.2811	7.950	0.3130	8.740	0.3441	9.530	0.3752	11.130	0.4382
11	-	-	-	-	6.350	0.2500	7.140	0.2811	7.950	0.3130	8.740	0.3441	9.530	0.3752	11.130	0.4382
12	-	-	-	-	6.350	0.2500	7.140	0.2811	7.950	0.3130	8.740	0.3441	9.530	0.3752	11.130	0.4382
14	-	-	-	-	6.350	0.2500	7.140	0.2811	7.950	0.3130	8.740	0.3441	9.530	0.3752	11.130	0.4382
16	-	-	-	-	6.350	0.2500	7.140	0.2811	7.950	0.3130	8.740	0.3441	9.530	0.3752	11.130	0.4382
18	-	-	-	-	-	-	-	-	7.950	0.3130	8.740	0.3441	9.530	0.3752	11.130	0.4382
20	-	-	-	-	-	-	-	-	-	-	-	-	9.530	0.3752	11.130	0.4382
22	-	-	-	-	-	-	-	-	-	-	-	-	9.530	0.3752	11.130	0.4382
24	-	-	-	-	-	-	-	-	-	-	-	-	9.530	0.3752	11.130	0.4382
28	-	-	-	-	-	-	-	-	-	-	-	-	-	-	-	-
32	-	-	-	-	-	-	-	-	-	-	-	-	-	-	-	-

ABS2042…F continued on pg 300. ►

Specifications

ABS2042…F

Diameter Code	Length L -0.100 mm / -0.400 mm -0.0039 Inch / -0.0157 Inch													
	016		018		020		022		024		028		032	
	mm	Inch	mm	Inch	mm	Inch	mm	Inch	mm	Inch	mm	Inch	mm	Inch
04	12.700	0.5000	-	-	-	-	-	-	-	-	-	-	-	-
05	12.700	0.5000	14.300	0.5630	15.880	0.6252	-	-	-	-	-	-	-	-
06	12.700	0.5000	14.300	0.5630	15.880	0.6252	17.480	0.6882	19.050	0.7500	-	-	-	-
07	12.700	0.5000	14.300	0.5630	15.880	0.6252	17.480	0.6882	19.050	0.7500	22.230	0.8752	-	-
08	12.700	0.5000	14.300	0.5630	15.880	0.6252	17.480	0.6882	19.050	0.7500	22.230	0.8752	-	-
10	12.700	0.5000	14.300	0.5630	15.880	0.6252	17.480	0.6882	19.050	0.7500	22.230	0.8752	25.400	1.0000
11	12.700	0.5000	14.300	0.5630	15.880	0.6252	17.480	0.6882	19.050	0.7500	22.230	0.8752	25.400	1.0000
12	12.700	0.5000	14.300	0.5630	15.880	0.6252	17.480	0.6882	19.050	0.7500	22.230	0.8752	25.400	1.0000
14	12.700	0.5000	14.300	0.5630	15.880	0.6252	17.480	0.6882	19.050	0.7500	22.230	0.8752	25.400	1.0000
16	12.700	0.5000	14.300	0.5630	15.880	0.6252	17.480	0.6882	19.050	0.7500	22.230	0.8752	25.400	1.0000
18	12.700	0.5000	14.300	0.5630	15.880	0.6252	17.480	0.6882	19.050	0.7500	22.230	0.8752	25.400	1.0000
20	12.700	0.5000	14.300	0.5630	15.880	0.6252	17.480	0.6882	19.050	0.7500	22.230	0.8752	25.400	1.0000
22	12.700	0.5000	14.300	0.5630	15.880	0.6252	17.480	0.6882	19.050	0.7500	22.230	0.8752	25.400	1.0000
24	12.700	0.5000	14.300	0.5630	15.880	0.6252	17.480	0.6882	19.050	0.7500	22.230	0.8752	25.400	1.0000
28	12.700	0.5000	14.300	0.5630	15.880	0.6252	17.480	0.6882	19.050	0.7500	22.230	0.8752	25.400	1.0000
32	12.700	0.5000	14.300	0.5630	15.880	0.6252	17.480	0.6882	19.050	0.7500	22.230	0.8752	25.400	1.0000

Designation

ABS2042A F
Number of Standard

04
Diameter Code

006
Length Code

Part Number Example
ABS2042A 04 F 006

Bearing Materials:

Material
EN2318 / 3.1354 T3511 / Alloy 2024; Anodized

Liner
FRASLIP F per EN2311 / SAE AS81934

Technical Specification
ABS2045

** Inch dimensions are for reference only. | * Permanently marked in non-functional area.*

Specifications

ABS2042…F

Diameter Code	Length L -0.100 mm / -0.400 mm -0.0039 Inch / -0.0157 Inch													
	036		040		044		048		052		056		060	
	mm	Inch	mm	Inch	mm	Inch	mm	Inch	mm	Inch	mm	Inch	mm	Inch
04	-	-	-	-	-	-	-	-	-	-	-	-	-	-
05	-	-	-	-	-	-	-	-	-	-	-	-	-	-
06	-	-	-	-	-	-	-	-	-	-	-	-	-	-
07	-	-	-	-	-	-	-	-	-	-	-	-	-	-
08	-	-	-	-	-	-	-	-	-	-	-	-	-	-
10	28.580	1.1252	31.750	1.2500	-	-	-	-	-	-	-	-	-	-
11	28.580	1.1252	31.750	1.2500	34.930	1.3752	-	-	-	-	-	-	-	-
12	28.580	1.1252	31.750	1.2500	34.930	1.3752	38.100	1.5000	-	-	-	-	-	-
14	28.580	1.1252	31.750	1.2500	34.930	1.3752	38.100	1.5000	41.280	1.6252	-	-	-	-
16	28.580	1.1252	31.750	1.2500	34.930	1.3752	38.100	1.5000	41.280	1.6252	44.450	1.7500	47.630	1.8752
18	28.580	1.1252	31.750	1.2500	34.930	1.3752	38.100	1.5000	41.280	1.6252	44.450	1.7500	47.630	1.8752
20	28.580	1.1252	31.750	1.2500	34.930	1.3752	38.100	1.5000	41.280	1.6252	44.450	1.7500	47.630	1.8752
22	28.580	1.1252	31.750	1.2500	34.930	1.3752	38.100	1.5000	41.280	1.6252	44.450	1.7500	47.630	1.8752
24	28.580	1.1252	31.750	1.2500	34.930	1.3752	38.100	1.5000	41.280	1.6252	44.450	1.7500	47.630	1.8752
28	28.580	1.1252	31.750	1.2500	34.930	1.3752	38.100	1.5000	41.280	1.6252	44.450	1.7500	47.630	1.8752
32	28.580	1.1252	31.750	1.2500	34.930	1.3752	38.100	1.5000	41.280	1.6252	44.450	1.7500	47.630	1.8752

Diameter Code	Length L -0.100 mm / -0.400 mm -0.0039 Inch / -0.0157 Inch													
	064		068		072		076		080		088		096	
	mm	Inch	mm	Inch	mm	Inch	mm	Inch	mm	Inch	mm	Inch	mm	Inch
04	-	-	-	-	-	-	-	-	-	-	-	-	-	-
05	-	-	-	-	-	-	-	-	-	-	-	-	-	-
06	-	-	-	-	-	-	-	-	-	-	-	-	-	-
07	-	-	-	-	-	-	-	-	-	-	-	-	-	-
08	-	-	-	-	-	-	-	-	-	-	-	-	-	-
10	-	-	-	-	-	-	-	-	-	-	-	-	-	-
11	-	-	-	-	-	-	-	-	-	-	-	-	-	-
12	-	-	-	-	-	-	-	-	-	-	-	-	-	-
14	-	-	-	-	-	-	-	-	-	-	-	-	-	-
16	-	-	-	-	-	-	-	-	-	-	-	-	-	-
18	50.800	2.0000	-	-	-	-	-	-	-	-	-	-	-	-
20	50.800	2.0000	53.980	2.1252	-	-	-	-	-	-	-	-	-	-
22	50.800	2.0000	53.980	2.1252	-	-	-	-	-	-	-	-	-	-
24	50.800	2.0000	53.980	2.1252	57.150	2.2500	60.330	2.3752	63.500	2.5000	69.850	2.7500	-	-
28	50.800	2.0000	53.980	2.1252	57.150	2.2500	60.330	2.3752	63.500	2.5000	69.850	2.7500	76.200	3.0000
32	50.800	2.0000	53.980	2.1252	57.150	2.2500	60.330	2.3752	63.500	2.5000	69.850	2.7500	76.200	3.0000

Contact

USA: KAMATICS CORPORATION 1330 Blue Hills Avenue Bloomfield, CT 06002 USA | **Tel:** +1 860 243 9704 | **E-mail:** KSB@kaman.com
GERMANY: RWG GERMANY GmbH Medbacher Weg 1 D-91315 Höchstadt a. d. Aisch | **Tel:** +49 (91 93) 50105 100 | **E-mail:** RWG@kaman.com

Journal Bearings

ABS2044…D

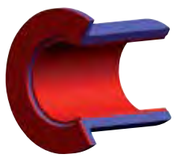

- Self-Lubricating
- CRES
- Flanged Type
- According to Specification ABS2045 / EN2311

Specifications

Diameter Code	Nominal Code		d		D		L_1		D_1		g (max.)	
			-0.025	-0.0010	±0.013	±0.0005	-0.130	-0.0051	-0.510	-0.0201		
	mm	Inch	mm	Inch	mm	Inch	mm	Inch	mm	Inch	mm	Inch
04	6.350	0.2500	6.388	0.2515	9.550	0.3760	1.600	0.0630	19.050	0.7500	0.710	0.0280
05	7.938	0.3125	7.976	0.3140	11.140	0.4386	1.600	0.0630	20.640	0.8126	0.710	0.0280
06	9.525	0.3750	9.563	0.3765	12.730	0.5012	1.600	0.0630	22.230	0.8752	0.710	0.0280
07	11.113	0.4375	11.151	0.4390	14.321	0.5638	1.600	0.0630	23.830	0.9382	0.710	0.0280
08	12.700	0.5000	12.738	0.5015	15.913	0.6265	1.600	0.0630	25.400	1.0000	0.710	0.0280
09	14.288	0.5625	14.326	0.5640	17.506	0.6892	1.600	0.0630	28.580	1.1252	0.710	0.0280
10	15.875	0.6250	15.913	0.6265	20.681	0.8142	1.600	0.0630	31.750	1.2500	0.710	0.0280
11	17.463	0.6875	17.501	0.6890	22.268	0.8767	1.600	0.0630	34.930	1.3752	0.710	0.0280
12	19.050	0.7500	19.088	0.7515	23.858	0.9393	1.600	0.0630	38.100	1.5000	0.710	0.0280
14	22.225	0.8750	22.263	0.8765	27.038	1.0645	1.600	0.0630	41.280	1.6252	0.990	0.0390
16	25.400	1.0000	25.438	1.0015	30.221	1.1898	1.600	0.0630	44.450	1.7500	0.990	0.0390
18	28.575	1.1250	28.613	1.1265	33.396	1.3148	2.390	0.0941	47.630	1.8752	0.990	0.0390
20	31.750	1.2500	31.788	1.2515	36.571	1.4398	2.390	0.0941	50.800	2.0000	0.990	0.0390
22	34.925	1.3750	34.963	1.3765	39.746	1.5648	2.390	0.0941	53.980	2.1252	0.990	0.0390
24	38.100	1.5000	38.138	1.5015	44.508	1.7523	2.390	0.0941	57.150	2.2500	0.990	0.0390
26	41.275	1.6250	41.313	1.6265	47.683	1.8773	2.390	0.0941	60.330	2.3752	0.990	0.0390
28	44.450	1.7500	44.488	1.7515	50.858	2.0023	2.390	0.0941	63.500	2.5000	0.990	0.0390
32	50.800	2.0000	50.838	2.0015	57.208	2.2523	2.390	0.0941	69.850	2.7500	0.990	0.0390

NOTES

Static Radial Limit Loads C_s:

$C_s = 0.541 \cdot d \cdot (L_2 - L_1 - 2)$ [kN]

Static Axial Limit Loads C_a:

$C_a = 0.34 \cdot [(D_1 - 1.5)^2 - (d + 2.5)^2]$ [kN]

Schematic Drawing

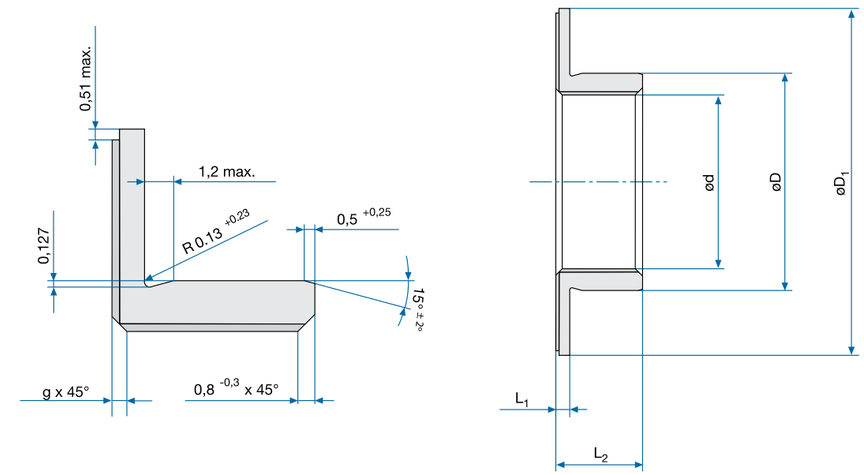

Specifications

ABS2044…D

Diameter Code	Length L_2 -0.100 mm / -0.400 mm -0.0039 Inch / -0.0157 Inch															
	006		007		008		009		010		011		012		014	
	mm	Inch	mm	Inch	mm	Inch	mm	Inch	mm	Inch	mm	Inch	mm	Inch	mm	Inch
04	4.780	0.1882	5.560	0.2189	6.350	0.2500	7.140	0.2811	7.950	0.3130	8.740	0.3441	9.530	0.3752	11.130	0.4382
05	4.780	0.1882	5.560	0.2189	6.350	0.2500	7.140	0.2811	7.950	0.3130	8.740	0.3441	9.530	0.3752	11.130	0.4382
06	4.780	0.1882	5.560	0.2189	6.350	0.2500	7.140	0.2811	7.950	0.3130	8.740	0.3441	9.530	0.3752	11.130	0.4382
07	4.780	0.1882	5.560	0.2189	6.350	0.2500	7.140	0.2811	7.950	0.3130	8.740	0.3441	9.530	0.3752	11.130	0.4382
08	4.780	0.1882	5.560	0.2189	6.350	0.2500	7.140	0.2811	7.950	0.3130	8.740	0.3441	9.530	0.3752	11.110	0.4374
09	4.780	0.1882	5.560	0.2189	6.350	0.2500	7.140	0.2811	7.950	0.3130	8.740	0.3441	9.530	0.3752	11.130	0.4382
10	4.780	0.1882	5.560	0.2189	6.350	0.2500	7.140	0.2811	7.950	0.3130	8.740	0.3441	9.530	0.3752	11.130	0.4382
11	-	-	-	-	6.350	0.2500	7.140	0.2811	7.950	0.3130	8.740	0.3441	9.530	0.3752	11.130	0.4382
12	-	-	-	-	6.350	0.2500	7.140	0.2811	7.950	0.3130	8.740	0.3441	9.530	0.3752	11.130	0.4382
14	-	-	-	-	6.350	0.2500	7.140	0.2811	7.950	0.3130	8.740	0.3441	9.530	0.3752	11.130	0.4382
16	-	-	-	-	6.350	0.2500	7.140	0.2811	7.950	0.3130	8.740	0.3441	9.530	0.3752	11.130	0.4382
18	-	-	-	-	-	-	-	-	7.950	0.3130	8.740	0.3441	9.530	0.3752	11.130	0.4382
20	-	-	-	-	-	-	-	-	-	-	-	-	9.530	0.3752	11.130	0.4382
22	-	-	-	-	-	-	-	-	-	-	-	-	9.530	0.3752	11.130	0.4382
24	-	-	-	-	-	-	-	-	-	-	-	-	9.530	0.3752	11.130	0.4382
26	-	-	-	-	-	-	-	-	-	-	-	-	-	-	-	-
28	-	-	-	-	-	-	-	-	-	-	-	-	-	-	-	-
32	-	-	-	-	-	-	-	-	-	-	-	-	-	-	-	-

ABS2044…D continued on pg 304. ►

Specifications

ABS2044…D

Diameter Code	Length L_2 -0.100 mm / -0.400 mm -0.0039 Inch / -0.0157 Inch													
	016		018		020		022		024		028		032	
	mm	Inch	mm	Inch	mm	Inch	mm	Inch	mm	Inch	mm	Inch	mm	Inch
04	12.700	0.5000	-	-	-	-	-	-	-	-	-	-	-	-
05	12.700	0.5000	14.300	0.5630	15.880	0.6252	-	-	-	-	-	-	-	-
06	12.700	0.5000	14.300	0.5630	15.880	0.6252	17.480	0.6882	19.050	0.7500	-	-	-	-
07	12.700	0.5000	14.300	0.5630	15.880	0.6252	17.480	0.6882	19.050	0.7500	22.230	0.8752	-	-
08	12.700	0.5000	14.300	0.5630	15.880	0.6252	17.480	0.6882	19.050	0.7500	22.230	0.8752	-	-
09	12.700	0.5000	14.300	0.5630	15.880	0.6252	17.480	0.6882	19.050	0.7500	22.230	0.8752	-	-
10	12.700	0.5000	14.300	0.5630	15.880	0.6252	17.480	0.6882	19.050	0.7500	22.230	0.8752	25.400	1.0000
11	12.700	0.5000	14.300	0.5630	15.880	0.6252	17.480	0.6882	19.050	0.7500	22.230	0.8752	25.400	1.0000
12	12.700	0.5000	14.300	0.5630	15.880	0.6252	17.480	0.6882	19.050	0.7500	22.230	0.8752	25.400	1.0000
14	12.700	0.5000	14.300	0.5630	15.880	0.6252	17.480	0.6882	19.050	0.7500	22.230	0.8752	25.400	1.0000
16	12.700	0.5000	14.300	0.5630	15.880	0.6252	17.480	0.6882	19.050	0.7500	22.230	0.8752	25.400	1.0000
18	12.700	0.5000	14.300	0.5630	15.880	0.6252	17.480	0.6882	19.050	0.7500	22.230	0.8752	25.400	1.0000
20	12.700	0.5000	14.300	0.5630	15.880	0.6252	17.480	0.6882	19.050	0.7500	22.230	0.8752	25.400	1.0000
22	12.700	0.5000	14.300	0.5630	15.880	0.6252	17.480	0.6882	19.050	0.7500	22.230	0.8752	25.400	1.0000
24	12.700	0.5000	14.300	0.5630	15.880	0.6252	17.480	0.6882	19.050	0.7500	22.230	0.8752	25.400	1.0000
26	12.700	0.5000	14.300	0.5630	15.880	0.6252	17.480	0.6882	19.050	0.7500	22.230	0.8752	25.400	1.0000
28	12.700	0.5000	14.300	0.5630	15.880	0.6252	17.480	0.6882	19.050	0.7500	22.230	0.8752	25.400	1.0000
32	12.700	0.5000	14.300	0.5630	15.880	0.6252	17.480	0.6882	19.050	0.7500	22.230	0.8752	25.400	1.0000

Designation

ABS2044A D
Number of Standard

04
Diameter Code

006
Length Code

Part Number Example
ABS2044A 04 D 006

Bearing Materials:

Material
EN3161 / 1.4545 / 17-4PH H1150

Liner
FRASLIP F per EN2311 / SAE AS81934

Technical Specification
ABS2045

** Inch dimensions are for reference only. | * Permanently marked in non-functional area.*

Specifications

ABS2044…D

Diameter Code	Length L_2 -0.100 mm / -0.400 mm -0.0039 Inch / -0.0157 Inch													
	036		040		044		048		052		056		060	
	mm	Inch	mm	Inch	mm	Inch	mm	Inch	mm	Inch	mm	Inch	mm	Inch
04	-	-	-	-	-	-	-	-	-	-	-	-	-	-
05	-	-	-	-	-	-	-	-	-	-	-	-	-	-
06	-	-	-	-	-	-	-	-	-	-	-	-	-	-
07	-	-	-	-	-	-	-	-	-	-	-	-	-	-
08	-	-	-	-	-	-	-	-	-	-	-	-	-	-
09	-	-	-	-	-	-	-	-	-	-	-	-	-	-
10	28.580	1.1252	31.750	1.2500	34.930	1.3752	-	-	-	-	-	-	-	-
11	28.580	1.1252	31.750	1.2500	34.930	1.3752	38.100	1.5000	41.280	1.6252	-	-	-	-
12	28.580	1.1252	31.750	1.2500	34.930	1.3752	38.100	1.5000	41.280	1.6252	-	-	-	-
14	28.580	1.1252	31.750	1.2500	34.930	1.3752	38.100	1.5000	41.280	1.6252	44.450	1.7500	47.630	1.8752
16	28.580	1.1252	31.750	1.2500	34.930	1.3752	38.100	1.5000	41.280	1.6252	44.450	1.7500	47.630	1.8752
18	28.580	1.1252	31.750	1.2500	34.930	1.3752	38.100	1.5000	41.280	1.6252	44.450	1.7500	47.630	1.8752
20	28.580	1.1252	31.750	1.2500	34.930	1.3752	38.100	1.5000	41.280	1.6252	44.450	1.7500	47.630	1.8752
22	28.580	1.1252	31.750	1.2500	34.930	1.3752	38.100	1.5000	41.280	1.6252	44.450	1.7500	47.630	1.8752
24	28.580	1.1252	31.750	1.2500	34.930	1.3752	38.100	1.5000	41.280	1.6252	44.450	1.7500	47.630	1.8752
26	28.580	1.1252	31.750	1.2500	34.930	1.3752	38.100	1.5000	41.280	1.6252	44.450	1.7500	47.630	1.8752
28	28.580	1.1252	31.750	1.2500	34.930	1.3752	38.100	1.5000	41.280	1.6252	44.450	1.7500	47.630	1.8752
32	28.580	1.1252	31.750	1.2500	34.930	1.3752	38.100	1.5000	41.280	1.6252	44.450	1.7500	47.630	1.8752

Diameter Code	Length L_2 -0.100 mm / -0.400 mm -0.0039 Inch / -0.0157 Inch													
	064		068		072		076		080		088		096	
	mm	Inch	mm	Inch	mm	Inch	mm	Inch	mm	Inch	mm	Inch	mm	Inch
04	-	-	-	-	-	-	-	-	-	-	-	-	-	-
05	-	-	-	-	-	-	-	-	-	-	-	-	-	-
06	-	-	-	-	-	-	-	-	-	-	-	-	-	-
07	-	-	-	-	-	-	-	-	-	-	-	-	-	-
08	-	-	-	-	-	-	-	-	-	-	-	-	-	-
09	-	-	-	-	-	-	-	-	-	-	-	-	-	-
10	-	-	-	-	-	-	-	-	-	-	-	-	-	-
11	-	-	-	-	-	-	-	-	-	-	-	-	-	-
12	-	-	-	-	-	-	-	-	-	-	-	-	-	-
14	-	-	-	-	-	-	-	-	-	-	-	-	-	-
16	50.800	2.0000	-	-	-	-	-	-	-	-	-	-	-	-
18	50.800	2.0000	53.980	2.1252	-	-	-	-	-	-	-	-	-	-
20	50.800	2.0000	53.980	2.1252	-	-	-	-	-	-	-	-	-	-
22	50.800	2.0000	53.980	2.1252	-	-	-	-	-	-	-	-	-	-
24	50.800	2.0000	53.980	2.1252	57.150	2.2500	60.330	2.3752	63.500	2.5000	69.850	2.7500	-	-
26	50.800	2.0000	53.980	2.1252	57.150	2.2500	60.330	2.3752	63.500	2.5000	69.850	2.7500	76.200	3.0000
28	50.800	2.0000	53.980	2.1252	57.150	2.2500	60.330	2.3752	63.500	2.5000	69.850	2.7500	76.200	3.0000
32	50.800	2.0000	53.980	2.1252	57.150	2.2500	60.330	2.3752	63.500	2.5000	69.850	2.7500	76.200	3.0000

Contact

USA: KAMATICS CORPORATION 1330 Blue Hills Avenue Bloomfield, CT 06002 USA | **Tel:** +1 860 243 9704 | **E-mail:** KSB@kaman.com
GERMANY: RWG GERMANY GmbH Medbacher Weg 1 D-91315 Höchstadt a. d. Aisch | **Tel:** +49 (91 93) 50105 100 | **E-mail:** RWG@kaman.com

Journal Bearings

ABS2044…F

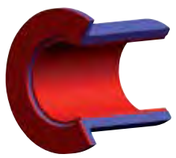

- Self-Lubricating
- CRES
- Flanged Type
- According to Specification ABS2045 / EN2311

Specifications

Diameter Code	Nominal Diameter		d		D		L_1		D_1		g (max.)		R	
			-0.025	-0.0010	-0.013	-0.0005	-0.130	-0.0051	-0.510	-0.0201			±0.130	±0.0051
	mm	Inch	mm	Inch	mm	Inch	mm	Inch	mm	Inch	mm	Inch	mm	Inch
04	6.350	0.2500	6.388	0.2515	9.550	0.3760	1.600	0.0630	12.700	0.5000	0.710	0.0280	0.250	0.0098
05	7.938	0.3125	7.976	0.3140	11.140	0.4386	1.600	0.0630	14.300	0.5630	0.710	0.0280	0.500	0.0197
06	9.525	0.3750	9.563	0.3765	12.730	0.5012	1.600	0.0630	15.880	0.6252	0.710	0.0280	0.650	0.0256
07	11.113	0.4375	11.151	0.4390	14.321	0.5638	1.600	0.0630	19.150	0.7539	0.710	0.0280	0.650	0.0256
08	12.700	0.5000	12.738	0.5015	15.913	0.6265	1.600	0.0630	22.230	0.8752	0.710	0.0280	0.650	0.0256
10	15.875	0.6250	15.913	0.6265	20.681	0.8142	1.600	0.0630	25.400	1.0000	0.710	0.0280	0.650	0.0256
11	17.463	0.6875	17.501	0.6890	22.268	0.8767	1.600	0.0630	27.000	1.0630	0.710	0.0280	0.650	0.0256
12	19.050	0.7500	19.088	0.7515	23.858	0.9393	1.600	0.0630	28.580	1.1252	0.710	0.0280	0.650	0.0256
14	22.225	0.8750	22.263	0.8765	27.038	1.0645	1.600	0.0630	31.750	1.2500	0.990	0.0390	0.650	0.0256
16	25.400	1.0000	25.438	1.0015	30.221	1.1898	1.600	0.0630	34.930	1.3752	0.990	0.0390	0.650	0.0256
18	28.575	1.1250	28.613	1.1265	33.396	1.3148	2.390	0.0941	41.280	1.6252	0.990	0.0390	0.650	0.0256
20	31.750	1.2500	31.788	1.2515	36.571	1.4398	2.390	0.0941	44.450	1.7500	0.990	0.0390	0.650	0.0256
22	34.925	1.3750	34.963	1.3765	39.746	1.5648	2.390	0.0941	47.630	1.8752	0.990	0.0390	0.650	0.0256
24	38.100	1.5000	38.138	1.5015	44.508	1.7523	2.390	0.0941	50.800	2.0000	0.990	0.0390	0.650	0.0256
28	44.450	1.7500	44.488	1.7515	50.858	2.0023	2.390	0.0941	57.150	2.2500	0.990	0.0390	0.650	0.0256
32	50.800	2.0000	50.838	2.0015	57.208	2.2523	2.390	0.0941	63.500	2.5000	0.990	0.0390	0.650	0.0256

NOTES

Static Radial Limit Loads C_s:

$C_s = 0.541 \cdot d \cdot (L_2 - L_1 - 2)$ [kN]

Static Axial Limit Loads Ca:

$C_a = 0.34 \cdot [(D_1 - 1.5)^2 - (d + 2.5)^2]$ [kN]

Schematic Drawing

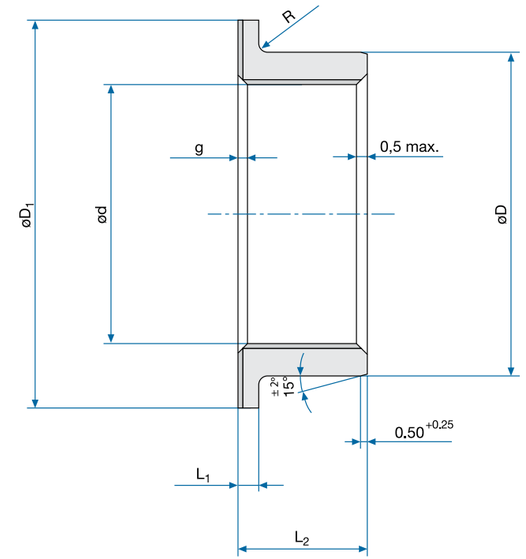

Specifications

ABS2044…F

Diameter Code	Length L -0.100 mm / -0.400 mm -0.0039 Inch / -0.0157 Inch															
	006		007		008		009		010		011		012		014	
	mm	Inch	mm	Inch	mm	Inch	mm	Inch	mm	Inch	mm	Inch	mm	Inch	mm	Inch
04	4.780	0.1882	5.560	0.2189	6.350	0.2500	7.140	0.2811	7.950	0.3130	8.740	0.3441	9.530	0.3752	11.130	0.4382
05	4.780	0.1882	5.560	0.2189	6.350	0.2500	7.140	0.2811	7.950	0.3130	8.740	0.3441	9.530	0.3752	11.130	0.4382
06	4.780	0.1882	5.560	0.2189	6.350	0.2500	7.140	0.2811	7.950	0.3130	8.740	0.3441	9.530	0.3752	11.130	0.4382
07	4.780	0.1882	5.560	0.2189	6.350	0.2500	7.140	0.2811	7.950	0.3130	8.740	0.3441	9.530	0.3752	11.130	0.4382
08	4.780	0.1882	5.560	0.2189	6.350	0.2500	7.140	0.2811	7.950	0.3130	8.740	0.3441	9.530	0.3752	11.110	0.4374
10	4.780	0.1882	5.560	0.2189	6.350	0.2500	7.140	0.2811	7.950	0.3130	8.740	0.3441	9.530	0.3752	11.130	0.4382
11	-	-	-	-	6.350	0.2500	7.140	0.2811	7.950	0.3130	8.740	0.3441	9.530	0.3752	11.130	0.4382
12	-	-	-	-	6.350	0.2500	7.140	0.2811	7.950	0.3130	8.740	0.3441	9.530	0.3752	11.130	0.4382
14	-	-	-	-	6.350	0.2500	7.140	0.2811	7.950	0.3130	8.740	0.3441	9.530	0.3752	11.130	0.4382
16	-	-	-	-	6.350	0.2500	7.140	0.2811	7.950	0.3130	8.740	0.3441	9.530	0.3752	11.130	0.4382
18	-	-	-	-	-	-	-	-	7.950	0.3130	8.740	0.3441	9.530	0.3752	11.130	0.4382
20	-	-	-	-	-	-	-	-	-	-	-	-	9.530	0.3752	11.130	0.4382
22	-	-	-	-	-	-	-	-	-	-	-	-	9.530	0.3752	11.130	0.4382
24	-	-	-	-	-	-	-	-	-	-	-	-	9.530	0.3752	11.130	0.4382
28	-	-	-	-	-	-	-	-	-	-	-	-	-	-	-	-
32	-	-	-	-	-	-	-	-	-	-	-	-	-	-	-	-

ABS2044…F continued on pg 308. ►

Specifications

ABS2044…F

Diameter Code	Length L_2 -0.100 mm / -0.400 mm -0.0039 Inch / -0.0157 Inch													
	016		018		020		022		024		028		032	
	mm	Inch	mm	Inch	mm	Inch	mm	Inch	mm	Inch	mm	Inch	mm	Inch
04	12.700	0.5000	-	-	-	-	-	-	-	-	-	-	-	-
05	12.700	0.5000	14.300	0.5630	15.880	0.6252	-	-	-	-	-	-	-	-
06	12.700	0.5000	14.300	0.5630	15.880	0.6252	17.480	0.6882	19.050	0.7500	-	-	-	-
07	12.700	0.5000	14.300	0.5630	15.880	0.6252	17.480	0.6882	19.050	0.7500	22.230	0.8752	-	-
08	12.700	0.5000	14.300	0.5630	15.880	0.6252	17.480	0.6882	19.050	0.7500	22.230	0.8752	-	-
10	12.700	0.5000	14.300	0.5630	15.880	0.6252	17.480	0.6882	19.050	0.7500	22.230	0.8752	25.400	1.0000
11	12.700	0.5000	14.300	0.5630	15.880	0.6252	17.480	0.6882	19.050	0.7500	22.230	0.8752	25.400	1.0000
12	12.700	0.5000	14.300	0.5630	15.880	0.6252	17.480	0.6882	19.050	0.7500	22.230	0.8752	25.400	1.0000
14	12.700	0.5000	14.300	0.5630	15.880	0.6252	17.480	0.6882	19.050	0.7500	22.230	0.8752	25.400	1.0000
16	12.700	0.5000	14.300	0.5630	15.880	0.6252	17.480	0.6882	19.050	0.7500	22.230	0.8752	25.400	1.0000
18	12.700	0.5000	14.300	0.5630	15.880	0.6252	17.480	0.6882	19.050	0.7500	22.230	0.8752	25.400	1.0000
20	12.700	0.5000	14.300	0.5630	15.880	0.6252	17.480	0.6882	19.050	0.7500	22.230	0.8752	25.400	1.0000
22	12.700	0.5000	14.300	0.5630	15.880	0.6252	17.480	0.6882	19.050	0.7500	22.230	0.8752	25.400	1.0000
24	12.700	0.5000	14.300	0.5630	15.880	0.6252	17.480	0.6882	19.050	0.7500	22.230	0.8752	25.400	1.0000
28	12.700	0.5000	14.300	0.5630	15.880	0.6252	17.480	0.6882	19.050	0.7500	22.230	0.8752	25.400	1.0000
32	12.700	0.5000	14.300	0.5630	15.880	0.6252	17.480	0.6882	19.050	0.7500	22.230	0.8752	25.400	1.0000

Designation

ABS2044A F — Number of Standard
04 — Diameter Code
006 — Length Code

Part Number Example
ABS2042A 04 F 006

Bearing Materials:

Material
EN3161 / 1.4545 / 17-4PH H1150

Liner
FRASLIP F per EN2311 / SAE AS81934

Technical Specification
ABS2045

** Inch dimensions are for reference only. | * Permanently marked in non-functional area.*

Specifications

ABS2044…F

Diameter Code	Length L_2 -0.100 mm / -0.400 mm -0.0039 Inch / -0.0157 Inch													
	036		040		044		048		052		056		060	
	mm	Inch	mm	Inch	mm	Inch	mm	Inch	mm	Inch	mm	Inch	mm	Inch
04	-	-	-	-	-	-	-	-	-	-	-	-	-	-
05	-	-	-	-	-	-	-	-	-	-	-	-	-	-
06	-	-	-	-	-	-	-	-	-	-	-	-	-	-
07	-	-	-	-	-	-	-	-	-	-	-	-	-	-
08	-	-	-	-	-	-	-	-	-	-	-	-	-	-
10	28.580	1.1252	31.750	1.2500	34.930	1.3752	-	-	-	-	-	-	-	-
11	28.580	1.1252	31.750	1.2500	34.930	1.3752	38.100	1.5000	41.280	1.6252	-	-	-	-
12	28.580	1.1252	31.750	1.2500	34.930	1.3752	38.100	1.5000	41.280	1.6252	-	-	-	-
14	28.580	1.1252	31.750	1.2500	34.930	1.3752	38.100	1.5000	41.280	1.6252	44.450	1.7500	47.630	1.8752
16	28.580	1.1252	31.750	1.2500	34.930	1.3752	38.100	1.5000	41.280	1.6252	44.450	1.7500	47.630	1.8752
18	28.580	1.1252	31.750	1.2500	34.930	1.3752	38.100	1.5000	41.280	1.6252	44.450	1.7500	47.630	1.8752
20	28.580	1.1252	31.750	1.2500	34.930	1.3752	38.100	1.5000	41.280	1.6252	44.450	1.7500	47.630	1.8752
22	28.580	1.1252	31.750	1.2500	34.930	1.3752	38.100	1.5000	41.280	1.6252	44.450	1.7500	47.630	1.8752
24	28.580	1.1252	31.750	1.2500	34.930	1.3752	38.100	1.5000	41.280	1.6252	44.450	1.7500	47.630	1.8752
28	28.580	1.1252	31.750	1.2500	34.930	1.3752	38.100	1.5000	41.280	1.6252	44.450	1.7500	47.630	1.8752
32	28.580	1.1252	31.750	1.2500	34.930	1.3752	38.100	1.5000	41.280	1.6252	44.450	1.7500	47.630	1.8752

Diameter Code	Length L_2 -0.100 mm / -0.400 mm -0.0039 Inch / -0.0157 Inch													
	064		068		072		076		080		088		096	
	mm	Inch	mm	Inch	mm	Inch	mm	Inch	mm	Inch	mm	Inch	mm	Inch
04	-	-	-	-	-	-	-	-	-	-	-	-	-	-
05	-	-	-	-	-	-	-	-	-	-	-	-	-	-
06	-	-	-	-	-	-	-	-	-	-	-	-	-	-
07	-	-	-	-	-	-	-	-	-	-	-	-	-	-
08	-	-	-	-	-	-	-	-	-	-	-	-	-	-
10	-	-	-	-	-	-	-	-	-	-	-	-	-	-
11	-	-	-	-	-	-	-	-	-	-	-	-	-	-
12	-	-	-	-	-	-	-	-	-	-	-	-	-	-
14	-	-	-	-	-	-	-	-	-	-	-	-	-	-
16	50.800	2.0000	-	-	-	-	-	-	-	-	-	-	-	-
18	50.800	2.0000	53.980	2.1252	-	-	-	-	-	-	-	-	-	-
20	50.800	2.0000	53.980	2.1252	-	-	-	-	-	-	-	-	-	-
22	50.800	2.0000	53.980	2.1252	-	-	-	-	-	-	-	-	-	-
24	50.800	2.0000	53.980	2.1252	57.150	2.2500	60.330	2.3752	63.500	2.5000	69.850	2.7500	-	-
28	50.800	2.0000	53.980	2.1252	57.150	2.2500	60.330	2.3752	63.500	2.5000	69.850	2.7500	76.200	3.0000
32	50.800	2.0000	53.980	2.1252	57.150	2.2500	60.330	2.3752	63.500	2.5000	69.850	2.7500	76.200	3.0000

Contact

USA: KAMATICS CORPORATION 1330 Blue Hills Avenue Bloomfield, CT 06002 USA | **Tel:** +1 860 243 9704 | **E-mail:** KSB@kaman.com
GERMANY: RWG GERMANY GmbH Medbacher Weg 1 D-91315 Höchstadt a. d. Aisch | **Tel:** +49 (91 93) 50105 100 | **E-mail:** RWG@kaman.com

Journal Bearings

EN4535 2D

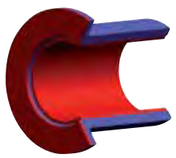

- Self-Lubricating
- Aluminium
- Flanged Type
- According to Specification EN2311 / SAE AS81934

Specifications

Diameter Code	Nominal Diameter		d		D		L_1		D_1		g (max.)	
			-0.025	-0.0010	±0.013	±0.0005	-0.130	-0.0051	-0.510	-0.0201		
	mm	Inch	mm	Inch	mm	Inch	mm	Inch	mm	Inch	mm	Inch
04	6.350	0.2500	6.388	0.2515	9.550	0.3760	1.600	0.0630	19.050	0.7500	0.700	0.0276
05	7.938	0.3125	7.976	0.3140	11.140	0.4386	1.600	0.0630	20.640	0.8126	0.700	0.0276
06	9.525	0.3750	9.563	0.3765	12.730	0.5012	1.600	0.0630	22.230	0.8752	0.700	0.0276
07	11.113	0.4375	11.151	0.4390	14.320	0.5638	1.600	0.0630	23.810	0.9374	0.700	0.0276
08	12.700	0.5000	12.738	0.5015	15.913	0.6265	1.600	0.0630	25.400	1.0000	0.700	0.0276
09	14.288	0.5625	14.326	0.5640	17.505	0.6892	1.600	0.0630	28.580	1.1252	0.700	0.0276
10	15.875	0.6250	15.913	0.6265	20.681	0.8142	1.600	0.0630	31.750	1.2500	0.700	0.0276
11	17.463	0.6875	17.501	0.6890	22.268	0.8767	1.600	0.0630	34.930	1.3752	0.700	0.0276
12	19.050	0.7500	19.088	0.7515	23.858	0.9393	1.600	0.0630	38.100	1.5000	0.700	0.0276
14	22.225	0.8750	22.263	0.8765	27.038	1.0645	1.600	0.0630	41.280	1.6252	1.000	0.0394
16	25.400	1.0000	25.438	1.0015	30.221	1.1898	1.600	0.0630	44.450	1.7500	1.000	0.0394
18	28.575	1.1250	28.613	1.1265	33.396	1.3148	2.390	0.0941	47.630	1.8752	1.000	0.0394
20	31.750	1.2500	31.788	1.2515	36.571	1.4398	2.390	0.0941	50.800	2.0000	1.000	0.0394
22	34.925	1.3750	34.963	1.3765	39.746	1.5648	2.390	0.0941	53.980	2.1252	1.000	0.0394
24	38.100	1.5000	38.138	1.5015	44.508	1.7523	2.390	0.0941	57.150	2.2500	1.000	0.0394
26	41.275	1.6250	41.313	1.6265	47.683	1.8773	2.390	0.0941	60.330	2.3752	1.000	0.0394
28	44.450	1.7500	44.488	1.7515	50.858	2.0023	2.390	0.0941	63.500	2.5000	1.000	0.0394
32	50.800	2.0000	50.838	2.0015	57.208	2.2523	2.390	0.0941	69.850	2.7500	1.000	0.0394

NOTES

Static Radial Limit Loads C_s:

$C_s = 0.29 \cdot d \cdot (L_2 - L_1 - 2)$ [kN]

Static Axial Limit Loads Ca:

$C_a = 0.16 \cdot [(D_1 - 1.5)^2 - (d + 2.5)^2]$ [kN]

Schematic Drawing

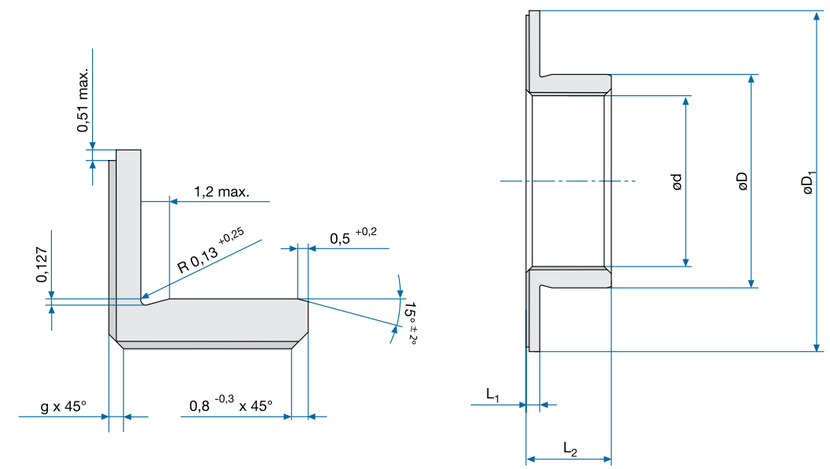

Specifications

EN4535 2D

Diameter Code	Length L_2 -0.100 mm / -0.400 mm -0.0039 Inch / -0.0157 Inch															
	006		007		008		009		010		011		012		014	
	mm	Inch	mm	Inch	mm	Inch	mm	Inch	mm	Inch	mm	Inch	mm	Inch	mm	Inch
04	4.760	0.1874	5.560	0.2189	6.350	0.2500	7.140	0.2811	7.940	0.3126	8.730	0.3437	9.530	0.3752	11.110	0.4374
05	4.760	0.1874	5.560	0.2189	6.350	0.2500	7.140	0.2811	7.940	0.3126	8.730	0.3437	9.530	0.3752	11.110	0.4374
06	4.760	0.1874	5.560	0.2189	6.350	0.2500	7.140	0.2811	7.940	0.3126	8.730	0.3437	9.530	0.3752	11.110	0.4374
07	4.760	0.1874	5.560	0.2189	6.350	0.2500	7.140	0.2811	7.940	0.3126	8.730	0.3437	9.530	0.3752	11.110	0.4374
08	4.760	0.1874	5.560	0.2189	6.350	0.2500	7.140	0.2811	7.940	0.3126	8.730	0.3437	9.530	0.3752	11.110	0.4374
09	4.760	0.1874	5.560	0.2189	6.350	0.2500	7.140	0.2811	7.940	0.3126	8.730	0.3437	9.530	0.3752	11.110	0.4374
10	4.760	0.1874	5.560	0.2189	6.350	0.2500	7.140	0.2811	7.940	0.3126	8.730	0.3437	9.530	0.3752	11.110	0.4374
11	-	-	-	-	6.350	0.2500	7.140	0.2811	7.940	0.3126	8.730	0.3437	9.530	0.3752	11.110	0.4374
12	-	-	-	-	6.350	0.2500	7.140	0.2811	7.940	0.3126	8.730	0.3437	9.530	0.3752	11.110	0.4374
14	-	-	-	-	6.350	0.2500	7.140	0.2811	7.940	0.3126	8.730	0.3437	9.530	0.3752	11.110	0.4374
16	-	-	-	-	6.350	0.2500	7.140	0.2811	7.940	0.3126	8.730	0.3437	9.530	0.3752	11.110	0.4374
18	-	-	-	-	-	-	-	-	7.940	0.3126	8.730	0.3437	9.530	0.3752	11.110	0.4374
20	-	-	-	-	-	-	-	-	-	-	-	-	9.530	0.3752	11.110	0.4374
22	-	-	-	-	-	-	-	-	-	-	-	-	9.530	0.3752	11.110	0.4374
24	-	-	-	-	-	-	-	-	-	-	-	-	9.530	0.3752	11.110	0.4374
26	-	-	-	-	-	-	-	-	-	-	-	-	-	-	-	-
28	-	-	-	-	-	-	-	-	-	-	-	-	-	-	-	-
32	-	-	-	-	-	-	-	-	-	-	-	-	-	-	-	-

EN4535 2D continued on pg 312. ►

Specifications

EN4535 2D

Diameter Code	Length L_2 -0.100 mm / -0.400 mm -0.0039 Inch / -0.0157 Inch													
	016		018		020		022		024		028		032	
	mm	Inch	mm	Inch	mm	Inch	mm	Inch	mm	Inch	mm	Inch	mm	Inch
04	12.700	0.5000	-	-	-	-	-	-	-	-	-	-	-	-
05	12.700	0.5000	14.290	0.5626	15.880	0.6252	-	-	-	-	-	-	-	-
06	12.700	0.5000	14.290	0.5626	15.880	0.6252	17.460	0.6874	19.050	0.7500	-	-	-	-
07	12.700	0.5000	14.290	0.5626	15.880	0.6252	17.460	0.6874	19.050	0.7500	22.230	0.8752	-	-
08	12.700	0.5000	14.290	0.5626	15.880	0.6252	17.460	0.6874	19.050	0.7500	22.230	0.8752	-	-
09	12.700	0.5000	14.290	0.5626	15.880	0.6252	17.460	0.6874	19.050	0.7500	22.230	0.8752	25.400	1.0000
10	12.700	0.5000	14.290	0.5626	15.880	0.6252	17.460	0.6874	19.050	0.7500	22.230	0.8752	25.400	1.0000
11	12.700	0.5000	14.290	0.5626	15.880	0.6252	17.460	0.6874	19.050	0.7500	22.230	0.8752	25.400	1.0000
12	12.700	0.5000	14.290	0.5626	15.880	0.6252	17.460	0.6874	19.050	0.7500	22.230	0.8752	25.400	1.0000
14	12.700	0.5000	14.290	0.5626	15.880	0.6252	17.460	0.6874	19.050	0.7500	22.230	0.8752	25.400	1.0000
16	12.700	0.5000	14.290	0.5626	15.880	0.6252	17.460	0.6874	19.050	0.7500	22.230	0.8752	25.400	1.0000
18	12.700	0.5000	14.290	0.5626	15.880	0.6252	17.460	0.6874	19.050	0.7500	22.230	0.8752	25.400	1.0000
20	12.700	0.5000	14.290	0.5626	15.880	0.6252	17.460	0.6874	19.050	0.7500	22.230	0.8752	25.400	1.0000
22	12.700	0.5000	14.290	0.5626	15.880	0.6252	17.460	0.6874	19.050	0.7500	22.230	0.8752	25.400	1.0000
24	12.700	0.5000	14.290	0.5626	15.880	0.6252	17.460	0.6874	19.050	0.7500	22.230	0.8752	25.400	1.0000
26	12.700	0.5000	14.290	0.5626	15.880	0.6252	17.460	0.6874	19.050	0.7500	22.230	0.8752	25.400	1.0000
28	12.700	0.5000	14.290	0.5626	15.880	0.6252	17.460	0.6874	19.050	0.7500	22.230	0.8752	25.400	1.0000
32	12.700	0.5000	14.290	0.5626	15.880	0.6252	17.460	0.6874	19.050	0.7500	22.230	0.8752	25.400	1.0000

Designation

EN4535 2D
Number of Standard

04
Diameter Code

R
Surface Treatment
No Code: None
R: Anodized

006
Length Code

Part Number Example
EN4535 2D 04 R 006

Bearing Materials:

Material
EN2318 / 3.1354 T3511 / Alloy 2024

Liner
FRASLIP F per EN2311 / SAE AS81934

Technical Specification
EN2311 / SAE AS81934

** Inch dimensions are for reference only. | * Permanently marked in non-functional area.*

Specifications

EN4535 2D

Diameter Code	Length L_2 -0.100 mm / -0.400 mm -0.0039 Inch / -0.0157 Inch													
	036		040		044		048		052		056		060	
	mm	Inch	mm	Inch	mm	Inch	mm	Inch	mm	Inch	mm	Inch	mm	Inch
04	-	-	-	-	-	-	-	-	-	-	-	-	-	-
05	-	-	-	-	-	-	-	-	-	-	-	-	-	-
06	-	-	-	-	-	-	-	-	-	-	-	-	-	-
07	-	-	-	-	-	-	-	-	-	-	-	-	-	-
08	-	-	-	-	-	-	-	-	-	-	-	-	-	-
09	28.580	1.1252	-	-	-	-	-	-	-	-	-	-	-	-
10	28.580	1.1252	31.750	1.2500	34.930	1.3752	-	-	-	-	-	-	-	-
11	28.580	1.1252	31.750	1.2500	34.930	1.3752	38.100	1.5000	41.280	1.6252	-	-	-	-
12	28.580	1.1252	31.750	1.2500	34.930	1.3752	38.100	1.5000	41.280	1.6252	-	-	-	-
14	28.580	1.1252	31.750	1.2500	34.930	1.3752	38.100	1.5000	41.280	1.6252	44.450	1.7500	47.630	1.8752
16	28.580	1.1252	31.750	1.2500	34.930	1.3752	38.100	1.5000	41.280	1.6252	44.450	1.7500	47.630	1.8752
18	28.580	1.1252	31.750	1.2500	34.930	1.3752	38.100	1.5000	41.280	1.6252	44.450	1.7500	47.630	1.8752
20	28.580	1.1252	31.750	1.2500	34.930	1.3752	38.100	1.5000	41.280	1.6252	44.450	1.7500	47.630	1.8752
22	28.580	1.1252	31.750	1.2500	34.930	1.3752	38.100	1.5000	41.280	1.6252	44.450	1.7500	47.630	1.8752
24	28.580	1.1252	31.750	1.2500	34.930	1.3752	38.100	1.5000	41.280	1.6252	44.450	1.7500	47.630	1.8752
26	28.580	1.1252	31.750	1.2500	34.930	1.3752	38.100	1.5000	41.280	1.6252	44.450	1.7500	47.630	1.8752
28	28.580	1.1252	31.750	1.2500	34.930	1.3752	38.100	1.5000	41.280	1.6252	44.450	1.7500	47.630	1.8752
32	28.580	1.1252	31.750	1.2500	34.930	1.3752	38.100	1.5000	41.280	1.6252	44.450	1.7500	47.630	1.8752

Diameter Code	Length L_2 -0.100 mm / -0.400 mm -0.0039 Inch / -0.0157 Inch													
	064		068		072		076		080		088		096	
	mm	Inch	mm	Inch	mm	Inch	mm	Inch	mm	Inch	mm	Inch	mm	Inch
04	-	-	-	-	-	-	-	-	-	-	-	-	-	-
05	-	-	-	-	-	-	-	-	-	-	-	-	-	-
06	-	-	-	-	-	-	-	-	-	-	-	-	-	-
07	-	-	-	-	-	-	-	-	-	-	-	-	-	-
08	-	-	-	-	-	-	-	-	-	-	-	-	-	-
09	-	-	-	-	-	-	-	-	-	-	-	-	-	-
10	-	-	-	-	-	-	-	-	-	-	-	-	-	-
11	-	-	-	-	-	-	-	-	-	-	-	-	-	-
12	-	-	-	-	-	-	-	-	-	-	-	-	-	-
14	-	-	-	-	-	-	-	-	-	-	-	-	-	-
16	50.800	2.0000	-	-	-	-	-	-	-	-	-	-	-	-
18	50.800	2.0000	53.980	2.1252	-	-	-	-	-	-	-	-	-	-
20	50.800	2.0000	53.980	2.1252	-	-	-	-	-	-	-	-	-	-
22	50.800	2.0000	53.980	2.1252	-	-	-	-	-	-	-	-	-	-
24	50.800	2.0000	53.980	2.1252	57.150	2.2500	60.330	2.3752	63.500	2.5000	69.850	2.7500	-	-
26	50.800	2.0000	53.980	2.1252	57.150	2.2500	60.330	2.3752	63.500	2.5000	69.850	2.7500	76.200	3.0000
28	50.800	2.0000	53.980	2.1252	57.150	2.2500	60.330	2.3752	63.500	2.5000	69.850	2.7500	76.200	3.0000
32	50.800	2.0000	53.980	2.1252	57.150	2.2500	60.330	2.3752	63.500	2.5000	69.850	2.7500	76.200	3.0000

Contact

USA: KAMATICS CORPORATION 1330 Blue Hills Avenue Bloomfield, CT 06002 USA | **Tel:** +1 860 243 9704 | **E-mail:** KSB@kaman.com
GERMANY: RWG GERMANY GmbH Medbacher Weg 1 D-91315 Höchstadt a. d. Aisch | **Tel:** +49 (91 93) 50105 100 | **E-mail:** RWG@kaman.com

Journal Bearings

EN4535 2F

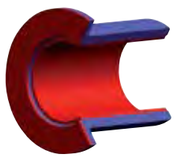

- Self-Lubricating
- Aluminum
- Flanged Type
- According to Specification EN2311 / SAE AS81934

Specifications

Diameter Code	Nominal Diameter		d		D		L_1		D_1		g (max.)		R	
			-0.025	-0.0010	±0.013	±0.0005	-0.130	-0.0051	-0.510	-0.0201			±0.130	±0.0051
	mm	Inch	mm	Inch	mm	Inch	mm	Inch	mm	Inch	mm	Inch	mm	Inch
04	6.350	0.2500	6.388	0.2515	9.550	0.3760	1.600	0.0630	12.700	0.5000	0.700	0.0276	0.250	0.0098
05	7.938	0.3125	7.976	0.3140	11.140	0.4386	1.600	0.0630	14.290	0.5626	0.700	0.0276	0.500	0.0197
06	9.525	0.3750	9.563	0.3765	12.730	0.5012	1.600	0.0630	15.880	0.6252	0.700	0.0276	0.650	0.0256
07	11.113	0.4375	11.151	0.4390	14.321	0.5638	1.600	0.0630	19.050	0.7500	0.700	0.0276	0.650	0.0256
08	12.700	0.5000	12.738	0.5015	15.913	0.6265	1.600	0.0630	22.230	0.8752	0.700	0.0276	0.650	0.0256
10	15.875	0.6250	15.913	0.6265	20.681	0.8142	1.600	0.0630	25.400	1.0000	0.700	0.0276	0.650	0.0256
11	17.463	0.6875	17.501	0.6890	22.268	0.8767	1.600	0.0630	26.990	1.0626	0.700	0.0276	0.650	0.0256
12	19.050	0.7500	19.088	0.7515	23.858	0.9393	1.600	0.0630	28.580	1.1252	0.700	0.0276	0.650	0.0256
14	22.225	0.8750	22.263	0.8765	27.038	1.0645	1.600	0.0630	31.750	1.2500	1.000	0.0394	0.650	0.0256
16	25.400	1.0000	25.438	1.0015	30.221	1.1898	1.600	0.0630	34.930	1.3752	1.000	0.0394	0.650	0.0256
18	28.575	1.1250	28.613	1.1265	33.396	1.3148	2.390	0.0941	41.280	1.6252	1.000	0.0394	0.650	0.0256
20	31.750	1.2500	31.788	1.2515	36.571	1.4398	2.390	0.0941	44.450	1.7500	1.000	0.0394	0.650	0.0256
22	34.925	1.3750	34.963	1.3765	39.746	1.5648	2.390	0.0941	47.630	1.8752	1.000	0.0394	0.650	0.0256
24	38.100	1.5000	38.138	1.5015	44.508	1.7523	2.390	0.0941	50.800	2.0000	1.000	0.0394	0.650	0.0256
28	44.450	1.7500	44.488	1.7515	50.858	2.0023	2.390	0.0941	57.150	2.2500	1.000	0.0394	0.650	0.0256
32	50.800	2.0000	50.838	2.0015	57.208	2.2523	2.390	0.0941	63.500	2.5000	1.000	0.0394	0.650	0.0256

NOTES

Static Radial Limit Loads C_s:

$C_s = 0.29 \cdot d \cdot (L_2 - L_1 - 2)$ [kN]

Static Axial Limit Loads C_a:

$C_a = 0.16 \cdot [(D_1 - 1.5)^2 - (d + 2.5)^2]$ [kN]

Schematic Drawing

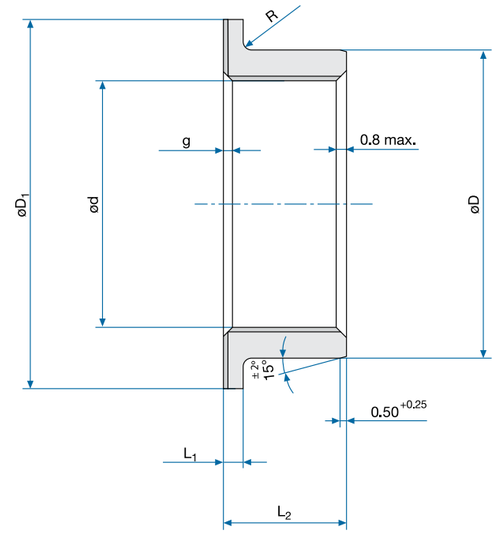

Specifications

EN4535 2F

Diameter Code	Length L_2 -0.100 mm / -0.400 mm -0.0039 Inch / -0.0157 Inch															
	006		007		008		009		010		011		012		014	
	mm	Inch	mm	Inch	mm	Inch	mm	Inch	mm	Inch	mm	Inch	mm	Inch	mm	Inch
04	4.760	0.1874	5.560	0.2189	6.350	0.2500	7.140	0.2811	7.940	0.3126	8.730	0.3437	9.530	0.3752	11.110	0.4374
05	4.760	0.1874	5.560	0.2189	6.350	0.2500	7.140	0.2811	7.940	0.3126	8.730	0.3437	9.530	0.3752	11.110	0.4374
06	4.760	0.1874	5.560	0.2189	6.350	0.2500	7.140	0.2811	7.940	0.3126	8.730	0.3437	9.530	0.3752	11.110	0.4374
07	4.760	0.1874	5.560	0.2189	6.350	0.2500	7.140	0.2811	7.940	0.3126	8.730	0.3437	9.530	0.3752	11.110	0.4374
08	4.760	0.1874	5.560	0.2189	6.350	0.2500	7.140	0.2811	7.940	0.3126	8.730	0.3437	9.530	0.3752	11.110	0.4374
10	4.760	0.1874	5.560	0.2189	6.350	0.2500	7.140	0.2811	7.940	0.3126	8.730	0.3437	9.530	0.3752	11.110	0.4374
11	-	-	-	-	6.350	0.2500	7.140	0.2811	7.940	0.3126	8.730	0.3437	9.530	0.3752	11.110	0.4374
12	-	-	-	-	6.350	0.2500	7.140	0.2811	7.940	0.3126	8.730	0.3437	9.530	0.3752	11.110	0.4374
14	-	-	-	-	6.350	0.2500	7.140	0.2811	7.940	0.3126	8.730	0.3437	9.530	0.3752	11.110	0.4374
16	-	-	-	-	6.350	0.2500	7.140	0.2811	7.940	0.3126	8.730	0.3437	9.530	0.3752	11.110	0.4374
18	-	-	-	-	-	-	-	-	7.940	0.3126	8.730	0.3437	9.530	0.3752	11.110	0.4374
20	-	-	-	-	-	-	-	-	-	-	-	-	9.530	0.3752	11.110	0.4374
22	-	-	-	-	-	-	-	-	-	-	-	-	9.530	0.3752	11.110	0.4374
24	-	-	-	-	-	-	-	-	-	-	-	-	9.530	0.3752	11.110	0.4374
28	-	-	-	-	-	-	-	-	-	-	-	-	-	-	-	-
32	-	-	-	-	-	-	-	-	-	-	-	-	-	-	-	-

EN4535 2F continued on pg 316. ►

Specifications

EN4535 2F

Diameter Code	Length L_2 -0.100 mm / -0.400 mm -0.0039 Inch / -0.0157 Inch													
	016		018		020		022		024		028		032	
	mm	Inch	mm	Inch	mm	Inch	mm	Inch	mm	Inch	mm	Inch	mm	Inch
04	12.700	0.5000	-	-	-	-	-	-	-	-	-	-	-	-
05	12.700	0.5000	14.290	0.5626	15.880	0.6252	-	-	-	-	-	-	-	-
06	12.700	0.5000	14.290	0.5626	15.880	0.6252	17.460	0.6874	19.050	0.7500	-	-	-	-
07	12.700	0.5000	14.290	0.5626	15.880	0.6252	17.460	0.6874	19.050	0.7500	22.230	0.8752	-	-
08	12.700	0.5000	14.290	0.5626	15.880	0.6252	17.460	0.6874	19.050	0.7500	22.230	0.8752	-	-
10	12.700	0.5000	14.290	0.5626	15.880	0.6252	17.460	0.6874	19.050	0.7500	22.230	0.8752	25.400	1.0000
11	12.700	0.5000	14.290	0.5626	15.880	0.6252	17.460	0.6874	19.050	0.7500	22.230	0.8752	25.400	1.0000
12	12.700	0.5000	14.290	0.5626	15.880	0.6252	17.460	0.6874	19.050	0.7500	22.230	0.8752	25.400	1.0000
14	12.700	0.5000	14.290	0.5626	15.880	0.6252	17.460	0.6874	19.050	0.7500	22.230	0.8752	25.400	1.0000
16	12.700	0.5000	14.290	0.5626	15.880	0.6252	17.460	0.6874	19.050	0.7500	22.230	0.8752	25.400	1.0000
18	12.700	0.5000	14.290	0.5626	15.880	0.6252	17.460	0.6874	19.050	0.7500	22.230	0.8752	25.400	1.0000
20	12.700	0.5000	14.290	0.5626	15.880	0.6252	17.460	0.6874	19.050	0.7500	22.230	0.8752	25.400	1.0000
22	12.700	0.5000	14.290	0.5626	15.880	0.6252	17.460	0.6874	19.050	0.7500	22.230	0.8752	25.400	1.0000
24	12.700	0.5000	14.290	0.5626	15.880	0.6252	17.460	0.6874	19.050	0.7500	22.230	0.8752	25.400	1.0000
28	12.700	0.5000	14.290	0.5626	15.880	0.6252	17.460	0.6874	19.050	0.7500	22.230	0.8752	25.400	1.0000
32	12.700	0.5000	14.290	0.5626	15.880	0.6252	17.460	0.6874	19.050	0.7500	22.230	0.8752	25.400	1.0000

Designation

EN4535 2F
Number of Standard

04
Diameter Code

R
Surface Treatment
No Code: None
R: Anodized

006
Length Code

Part Number Example
EN4535 2F 04 R 006

Bearing Materials:

Material
EN2318 / 3.1354 T3511 / Alloy 2024

Liner
FRASLIP F per EN2311 / SAE AS81934

Technical Specification
EN2311 / SAE AS81934

** Inch dimensions are for reference only. | * Permanently marked in non-functional area.*

Specifications

EN4535 2F

Diameter Code	Length L_2 -0.100 mm / -0.400 mm -0.0039 Inch / -0.0157 Inch													
	036		040		044		048		052		056		060	
	mm	Inch	mm	Inch	mm	Inch	mm	Inch	mm	Inch	mm	Inch	mm	Inch
04	-	-	-	-	-	-	-	-	-	-	-	-	-	-
05	-	-	-	-	-	-	-	-	-	-	-	-	-	-
06	-	-	-	-	-	-	-	-	-	-	-	-	-	-
07	-	-	-	-	-	-	-	-	-	-	-	-	-	-
08	-	-	-	-	-	-	-	-	-	-	-	-	-	-
10	28.580	1.1252	31.750	1.2500	34.930	1.3752	-	-	-	-	-	-	-	-
11	28.580	1.1252	31.750	1.2500	34.930	1.3752	38.100	1.5000	41.280	1.6252	-	-	-	-
12	28.580	1.1252	31.750	1.2500	34.930	1.3752	38.100	1.5000	41.280	1.6252	-	-	-	-
14	28.580	1.1252	31.750	1.2500	34.930	1.3752	38.100	1.5000	41.280	1.6252	44.450	1.7500	47.630	1.8752
16	28.580	1.1252	31.750	1.2500	34.930	1.3752	38.100	1.5000	41.280	1.6252	44.450	1.7500	47.630	1.8752
18	28.580	1.1252	31.750	1.2500	34.930	1.3752	38.100	1.5000	41.280	1.6252	44.450	1.7500	47.630	1.8752
20	28.580	1.1252	31.750	1.2500	34.930	1.3752	38.100	1.5000	41.280	1.6252	44.450	1.7500	47.630	1.8752
22	28.580	1.1252	31.750	1.2500	34.930	1.3752	38.100	1.5000	41.280	1.6252	44.450	1.7500	47.630	1.8752
24	28.580	1.1252	31.750	1.2500	34.930	1.3752	38.100	1.5000	41.280	1.6252	44.450	1.7500	47.630	1.8752
28	28.580	1.1252	31.750	1.2500	34.930	1.3752	38.100	1.5000	41.280	1.6252	44.450	1.7500	47.630	1.8752
32	28.580	1.1252	31.750	1.2500	34.930	1.3752	38.100	1.5000	41.280	1.6252	44.450	1.7500	47.630	1.8752

Diameter Code	Length L_2 -0.100 mm / -0.400 mm -0.0039 Inch / -0.0157 Inch													
	064		068		072		076		080		088		096	
	mm	Inch	mm	Inch	mm	Inch	mm	Inch	mm	Inch	mm	Inch	mm	Inch
04	-	-	-	-	-	-	-	-	-	-	-	-	-	-
05	-	-	-	-	-	-	-	-	-	-	-	-	-	-
06	-	-	-	-	-	-	-	-	-	-	-	-	-	-
07	-	-	-	-	-	-	-	-	-	-	-	-	-	-
08	-	-	-	-	-	-	-	-	-	-	-	-	-	-
10	-	-	-	-	-	-	-	-	-	-	-	-	-	-
11	-	-	-	-	-	-	-	-	-	-	-	-	-	-
12	-	-	-	-	-	-	-	-	-	-	-	-	-	-
14	-	-	-	-	-	-	-	-	-	-	-	-	-	-
16	50.800	2.0000	-	-	-	-	-	-	-	-	-	-	-	-
18	50.800	2.0000	53.980	2.1252	-	-	-	-	-	-	-	-	-	-
20	50.800	2.0000	53.980	2.1252	-	-	-	-	-	-	-	-	-	-
22	50.800	2.0000	53.980	2.1252	-	-	-	-	-	-	-	-	-	-
24	50.800	2.0000	53.980	2.1252	57.150	2.2500	60.330	2.3752	63.500	2.5000	69.850	2.7500	-	-
28	50.800	2.0000	53.980	2.1252	57.150	2.2500	60.330	2.3752	63.500	2.5000	69.850	2.7500	76.200	3.0000
32	50.800	2.0000	53.980	2.1252	57.150	2.2500	60.330	2.3752	63.500	2.5000	69.850	2.7500	76.200	3.0000

Contact

USA: KAMATICS CORPORATION 1330 Blue Hills Avenue Bloomfield, CT 06002 USA | **Tel:** +1 860 243 9704 | **E-mail:** KSB@kaman.com
GERMANY: RWG GERMANY GmbH Medbacher Weg 1 D-91315 Höchstadt a. d. Aisch | **Tel:** +49 (91 93) 50105 100 | **E-mail:** RWG@kaman.com

Journal Bearings

EN4537 2D

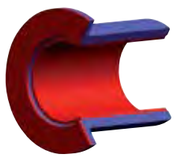

- Self-Lubricating
- CRES
- Flanged Type
- According to Specification EN2311 / SAE AS81934

Specifications

Diameter Code	Nominal Diameter		d		D		L_1		D_1		g (max.)	
			-0.025	-0.0010	±0.013	±0.0005	-0.130	-0.0051	-0.510	-0.0201		
	mm	Inch	mm	Inch	mm	Inch	mm	Inch	mm	Inch	mm	Inch
04	6.350	0.2500	6.388	0.2515	9.550	0.3760	1.600	0.0630	19.050	0.7500	0.700	0.0276
05	7.938	0.3125	7.976	0.3140	11.140	0.4386	1.600	0.0630	20.640	0.8126	0.700	0.0276
06	9.525	0.3750	9.563	0.3765	12.730	0.5012	1.600	0.0630	22.230	0.8752	0.700	0.0276
07	11.113	0.4375	11.151	0.4390	14.321	0.5638	1.600	0.0630	23.810	0.9374	0.700	0.0276
08	12.700	0.5000	12.738	0.5015	15.913	0.6265	1.600	0.0630	25.400	1.0000	0.700	0.0276
09	14.288	0.5625	14.326	0.5640	17.506	0.6892	1.600	0.0630	28.580	1.1252	0.700	0.0276
10	15.875	0.6250	15.913	0.6265	20.681	0.8142	1.600	0.0630	31.750	1.2500	0.700	0.0276
11	17.463	0.6875	17.501	0.6890	22.268	0.8767	1.600	0.0630	34.930	1.3752	0.700	0.0276
12	19.050	0.7500	19.088	0.7515	23.858	0.9393	1.600	0.0630	38.100	1.5000	0.700	0.0276
14	22.225	0.8750	22.263	0.8765	27.038	1.0645	1.600	0.0630	41.280	1.6252	1.000	0.0394
16	25.400	1.0000	25.438	1.0015	30.221	1.1898	1.600	0.0630	44.450	1.7500	1.000	0.0394
18	28.575	1.1250	28.613	1.1265	33.396	1.3148	2.390	0.0941	47.630	1.8752	1.000	0.0394
20	31.750	1.2500	31.788	1.2515	36.571	1.4398	2.390	0.0941	50.800	2.0000	1.000	0.0394
22	34.925	1.3750	34.963	1.3765	39.746	1.5648	2.390	0.0941	53.980	2.1252	1.000	0.0394
24	38.100	1.5000	38.138	1.5015	44.508	1.7523	2.390	0.0941	57.150	2.2500	1.000	0.0394
26	41.275	1.6250	41.313	1.6265	47.683	1.8773	2.390	0.0941	60.330	2.3752	1.000	0.0394
28	44.450	1.7500	44.488	1.7515	50.858	2.0023	2.390	0.0941	63.500	2.5000	1.000	0.0394
32	50.800	2.0000	50.838	2.0015	57.208	2.2523	2.390	0.0941	69.850	2.7500	1.000	0.0394

NOTES

Static Radial Limit Loads C_s:

$C_s = 0.541 \cdot d \cdot (L_2 - L_1 - 2)$ [kN]

Static Axial Limit Loads Ca:

$C_a = 0.34 \cdot [(D_1 - 1.5)^2 - (d + 2.5)^2]$ [kN]

Schematic Drawing

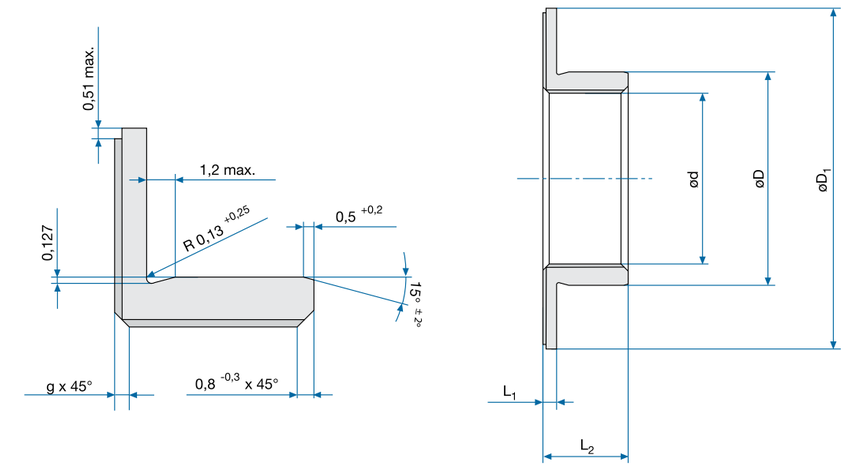

Specifications

EN4537 2D

Diameter Code	Length L_2 -0.100 mm / -0.400 mm -0.0039 Inch / -0.0157 Inch															
	006		007		008		009		010		011		012		014	
	mm	Inch	mm	Inch	mm	Inch	mm	Inch	mm	Inch	mm	Inch	mm	Inch	mm	Inch
04	4.760	0.1874	5.560	0.2189	6.350	0.2500	7.140	0.2811	7.940	0.3126	8.730	0.3437	9.530	0.3752	11.110	0.4374
05	4.760	0.1874	5.560	0.2189	6.350	0.2500	7.140	0.2811	7.940	0.3126	8.730	0.3437	9.530	0.3752	11.110	0.4374
06	4.760	0.1874	5.560	0.2189	6.350	0.2500	7.140	0.2811	7.940	0.3126	8.730	0.3437	9.530	0.3752	11.110	0.4374
07	4.760	0.1874	5.560	0.2189	6.350	0.2500	7.140	0.2811	7.940	0.3126	8.730	0.3437	9.530	0.3752	11.110	0.4374
08	4.760	0.1874	5.560	0.2189	6.350	0.2500	7.140	0.2811	7.940	0.3126	8.730	0.3437	9.530	0.3752	11.110	0.4374
09	4.760	0.1874	5.560	0.2189	6.350	0.2500	7.140	0.2811	7.940	0.3126	8.730	0.3437	9.530	0.3752	11.110	0.4374
10	4.760	0.1874	5.560	0.2189	6.350	0.2500	7.140	0.2811	7.940	0.3126	8.730	0.3437	9.530	0.3752	11.110	0.4374
11	-	-	-	-	6.350	0.2500	7.140	0.2811	7.940	0.3126	8.730	0.3437	9.530	0.3752	11.110	0.4374
12	-	-	-	-	6.350	0.2500	7.140	0.2811	7.940	0.3126	8.730	0.3437	9.530	0.3752	11.110	0.4374
14	-	-	-	-	6.350	0.2500	7.140	0.2811	7.940	0.3126	8.730	0.3437	9.530	0.3752	11.110	0.4374
16	-	-	-	-	6.350	0.2500	7.140	0.2811	7.940	0.3126	8.730	0.3437	9.530	0.3752	11.110	0.4374
18	-	-	-	-	-	-	-	-	7.940	0.3126	8.730	0.3437	9.530	0.3752	11.110	0.4374
20	-	-	-	-	-	-	-	-	-	-	-	-	9.530	0.3752	11.110	0.4374
22	-	-	-	-	-	-	-	-	-	-	-	-	9.530	0.3752	11.110	0.4374
24	-	-	-	-	-	-	-	-	-	-	-	-	9.530	0.3752	11.110	0.4374
26	-	-	-	-	-	-	-	-	-	-	-	-	-	-	-	-
28	-	-	-	-	-	-	-	-	-	-	-	-	-	-	-	-
32	-	-	-	-	-	-	-	-	-	-	-	-	-	-	-	-

EN4537 2D continued on pg 320. ►

Specifications

EN4537 2D

Diameter Code	Length L_2 -0.100 mm / -0.400 mm -0.0039 Inch / -0.0157 Inch													
	016		018		020		022		024		028		032	
	mm	Inch	mm	Inch	mm	Inch	mm	Inch	mm	Inch	mm	Inch	mm	Inch
04	12.700	0.5000	-	-	-	-	-	-	-	-	-	-	-	-
05	12.700	0.5000	14.290	0.5626	15.880	0.6252	-	-	-	-	-	-	-	-
06	12.700	0.5000	14.290	0.5626	15.880	0.6252	17.460	0.6874	19.050	0.7500	-	-	-	-
07	12.700	0.5000	14.290	0.5626	15.880	0.6252	17.460	0.6874	19.050	0.7500	22.230	0.8752	-	-
08	12.700	0.5000	14.290	0.5626	15.880	0.6252	17.460	0.6874	19.050	0.7500	22.230	0.8752	-	-
09	12.700	0.5000	14.290	0.5626	15.880	0.6252	17.460	0.6874	19.050	0.7500	22.230	0.8752	-	-
10	12.700	0.5000	14.290	0.5626	15.880	0.6252	17.460	0.6874	19.050	0.7500	22.230	0.8752	25.400	1.0000
11	12.700	0.5000	14.290	0.5626	15.880	0.6252	17.460	0.6874	19.050	0.7500	22.230	0.8752	25.400	1.0000
12	12.700	0.5000	14.290	0.5626	15.880	0.6252	17.460	0.6874	19.050	0.7500	22.230	0.8752	25.400	1.0000
14	12.700	0.5000	14.290	0.5626	15.880	0.6252	17.460	0.6874	19.050	0.7500	22.230	0.8752	25.400	1.0000
16	12.700	0.5000	14.290	0.5626	15.880	0.6252	17.460	0.6874	19.050	0.7500	22.230	0.8752	25.400	1.0000
18	12.700	0.5000	14.290	0.5626	15.880	0.6252	17.460	0.6874	19.050	0.7500	22.230	0.8752	25.400	1.0000
20	12.700	0.5000	14.290	0.5626	15.880	0.6252	17.460	0.6874	19.050	0.7500	22.230	0.8752	25.400	1.0000
22	12.700	0.5000	14.290	0.5626	15.880	0.6252	17.460	0.6874	19.050	0.7500	22.230	0.8752	25.400	1.0000
24	12.700	0.5000	14.290	0.5626	15.880	0.6252	17.460	0.6874	19.050	0.7500	22.230	0.8752	25.400	1.0000
26	12.700	0.5000	14.290	0.5626	15.880	0.6252	17.460	0.6874	19.050	0.7500	22.230	0.8752	25.400	1.0000
28	12.700	0.5000	14.290	0.5626	15.880	0.6252	17.460	0.6874	19.050	0.7500	22.230	0.8752	25.400	1.0000
32	12.700	0.5000	14.290	0.5626	15.880	0.6252	17.460	0.6874	19.050	0.7500	22.230	0.8752	25.400	1.0000

Designation

EN4537 2D
Number of Standard

04
Diameter Code

T
Surface Treatment
No Code: None
T: Passivated

006
Length Code

Part Number Example
EN4537 2D 04 T 006

Bearing Materials:

Material
EN3161 / 1.4545 / 17-4PH H1150

Liner
FRASLIP F per EN2311 / SAE AS81934

Technical Specification
EN2311 / SAE AS81934

** Inch dimensions are for reference only. | * Permanently marked in non-functional area.*

Specifications

EN4537 2D

Diameter Code	Length L_2 -0.100 mm / -0.400 mm -0.0039 Inch / -0.0157 Inch													
	036		040		044		048		052		056		060	
	mm	Inch	mm	Inch	mm	Inch	mm	Inch	mm	Inch	mm	Inch	mm	Inch
04	-	-	-	-	-	-	-	-	-	-	-	-	-	-
05	-	-	-	-	-	-	-	-	-	-	-	-	-	-
06	-	-	-	-	-	-	-	-	-	-	-	-	-	-
07	-	-	-	-	-	-	-	-	-	-	-	-	-	-
08	-	-	-	-	-	-	-	-	-	-	-	-	-	-
09	-	-	-	-	-	-	-	-	-	-	-	-	-	-
10	28.580	1.1252	31.750	1.2500	34.930	1.3752	-	-	-	-	-	-	-	-
11	28.580	1.1252	31.750	1.2500	34.930	1.3752	38.100	1.5000	41.280	1.6252	-	-	-	-
12	28.580	1.1252	31.750	1.2500	34.930	1.3752	38.100	1.5000	41.280	1.6252	-	-	-	-
14	28.580	1.1252	31.750	1.2500	34.930	1.3752	38.100	1.5000	41.280	1.6252	44.450	1.7500	47.630	1.8752
16	28.580	1.1252	31.750	1.2500	34.930	1.3752	38.100	1.5000	41.280	1.6252	44.450	1.7500	47.630	1.8752
18	28.580	1.1252	31.750	1.2500	34.930	1.3752	38.100	1.5000	41.280	1.6252	44.450	1.7500	47.630	1.8752
20	28.580	1.1252	31.750	1.2500	34.930	1.3752	38.100	1.5000	41.280	1.6252	44.450	1.7500	47.630	1.8752
22	28.580	1.1252	31.750	1.2500	34.930	1.3752	38.100	1.5000	41.280	1.6252	44.450	1.7500	47.630	1.8752
24	28.580	1.1252	31.750	1.2500	34.930	1.3752	38.100	1.5000	41.280	1.6252	44.450	1.7500	47.630	1.8752
26	28.580	1.1252	31.750	1.2500	34.930	1.3752	38.100	1.5000	41.280	1.6252	44.450	1.7500	47.630	1.8752
28	28.580	1.1252	31.750	1.2500	34.930	1.3752	38.100	1.5000	41.280	1.6252	44.450	1.7500	47.630	1.8752
32	28.580	1.1252	31.750	1.2500	34.930	1.3752	38.100	1.5000	41.280	1.6252	44.450	1.7500	47.630	1.8752

Diameter Code	Length L_2 -0.100 mm / -0.400 mm -0.0039 Inch / -0.0157 Inch													
	064		068		072		076		080		088		096	
	mm	Inch	mm	Inch	mm	Inch	mm	Inch	mm	Inch	mm	Inch	mm	Inch
04	-	-	-	-	-	-	-	-	-	-	-	-	-	-
05	-	-	-	-	-	-	-	-	-	-	-	-	-	-
06	-	-	-	-	-	-	-	-	-	-	-	-	-	-
07	-	-	-	-	-	-	-	-	-	-	-	-	-	-
08	-	-	-	-	-	-	-	-	-	-	-	-	-	-
09	-	-	-	-	-	-	-	-	-	-	-	-	-	-
10	-	-	-	-	-	-	-	-	-	-	-	-	-	-
11	-	-	-	-	-	-	-	-	-	-	-	-	-	-
12	-	-	-	-	-	-	-	-	-	-	-	-	-	-
14	-	-	-	-	-	-	-	-	-	-	-	-	-	-
16	50.800	2.0000	-	-	-	-	-	-	-	-	-	-	-	-
18	50.800	2.0000	53.980	2.1252	-	-	-	-	-	-	-	-	-	-
20	50.800	2.0000	53.980	2.1252	-	-	-	-	-	-	-	-	-	-
22	50.800	2.0000	53.980	2.1252	-	-	-	-	-	-	-	-	-	-
24	50.800	2.0000	53.980	2.1252	57.150	2.2500	60.330	2.3752	63.500	2.5000	69.850	2.7500	-	-
26	50.800	2.0000	53.980	2.1252	57.150	2.2500	60.330	2.3752	63.500	2.5000	69.850	2.7500	76.200	3.0000
28	50.800	2.0000	53.980	2.1252	57.150	2.2500	60.330	2.3752	63.500	2.5000	69.850	2.7500	76.200	3.0000
32	50.800	2.0000	53.980	2.1252	57.150	2.2500	60.330	2.3752	63.500	2.5000	69.850	2.7500	76.200	3.0000

Contact

USA: KAMATICS CORPORATION 1330 Blue Hills Avenue Bloomfield, CT 06002 USA | **Tel:** +1 860 243 9704 | **E-mail:** KSB@kaman.com
GERMANY: RWG GERMANY GmbH Medbacher Weg 1 D-91315 Höchstadt a. d. Aisch | **Tel:** +49 (91 93) 50105 100 | **E-mail:** RWG@kaman.com

Journal Bearings

EN4537 2F

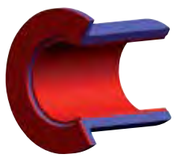

- Self-Lubricating
- CRES
- Flanged Type
- According to Specification EN2311 / SAE AS81934

Specifications

Diameter Code	Nominal Diameter		d		D		L_1		D_1		g x 45° (max.)		R	
			-0.025	-0.0010	±0.013	±0.0005	-0.130	-0.0051	-0.510	-0.0201			±0.130	±0.0051
	mm	Inch	mm	Inch	mm	Inch	mm	Inch	mm	Inch	mm	Inch	mm	Inch
04	6.350	0.2500	6.388	0.2515	9.550	0.3760	1.600	0.0630	12.700	0.5000	0.700	0.0276	0.250	0.0098
05	7.938	0.3125	7.976	0.3140	11.140	0.4386	1.600	0.0630	14.290	0.5626	0.700	0.0276	0.500	0.0197
06	9.525	0.3750	9.563	0.3765	12.730	0.5012	1.600	0.0630	15.880	0.6252	0.700	0.0276	0.650	0.0256
07	11.113	0.4375	11.151	0.4390	14.321	0.5638	1.600	0.0630	19.050	0.7500	0.700	0.0276	0.650	0.0256
08	12.700	0.5000	12.738	0.5015	15.913	0.6265	1.600	0.0630	22.230	0.8752	0.700	0.0276	0.650	0.0256
10	15.875	0.6250	15.913	0.6265	20.681	0.8142	1.600	0.0630	25.400	1.0000	0.700	0.0276	0.650	0.0256
11	17.463	0.6875	17.501	0.6890	22.268	0.8767	1.600	0.0630	26.990	1.0626	0.700	0.0276	0.650	0.0256
12	19.050	0.7500	19.088	0.7515	23.858	0.9393	1.600	0.0630	28.580	1.1252	0.700	0.0276	0.650	0.0256
14	22.225	0.8750	22.263	0.8765	27.038	1.0645	1.600	0.0630	31.750	1.2500	1.000	0.0394	0.650	0.0256
16	25.400	1.0000	25.438	1.0015	30.221	1.1898	1.600	0.0630	34.930	1.3752	1.000	0.0394	0.650	0.0256
18	28.575	1.1250	28.613	1.1265	33.396	1.3148	2.390	0.0941	41.280	1.6252	1.000	0.0394	0.650	0.0256
20	31.750	1.2500	31.788	1.2515	36.571	1.4398	2.390	0.0941	44.450	1.7500	1.000	0.0394	0.650	0.0256
22	34.925	1.3750	34.963	1.3765	39.746	1.5648	2.390	0.0941	47.630	1.8752	1.000	0.0394	0.650	0.0256
24	38.100	1.5000	38.138	1.5015	44.508	1.7523	2.390	0.0941	50.800	2.0000	1.000	0.0394	0.650	0.0256
28	44.450	1.7500	44.488	1.7515	50.858	2.0023	2.390	0.0941	57.150	2.2500	1.000	0.0394	0.650	0.0256
32	50.800	2.0000	50.838	2.0015	57.208	2.2523	2.390	0.0941	63.500	2.5000	1.000	0.0394	0.650	0.0256

NOTES

Static Radial Limit Loads C_s:

$C_s = 0.541 \cdot d \cdot (L_2 - L_1 - 2)$ [kN]

Static Axial Limit Loads C_a:

$C_a = 0.34 \cdot [(D_1 - 1.5)^2 - (d + 2.5)^2]$ [kN]

Schematic Drawing

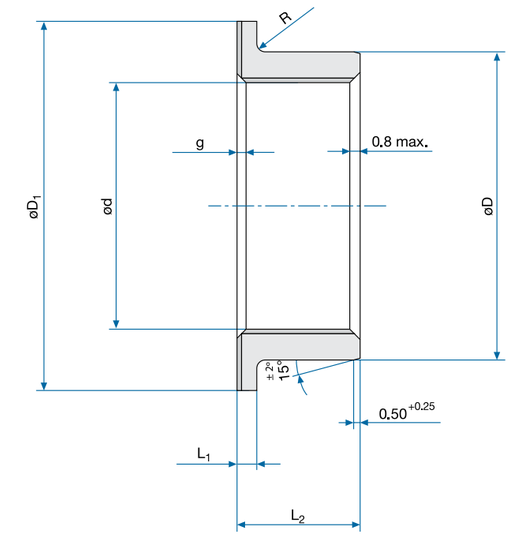

Specifications

EN4537 2F

Diameter Code	Length L_2 -0.100 mm / -0.400 mm -0.0039 Inch / -0.0157 Inch															
	006		007		008		009		010		011		012		014	
	mm	Inch	mm	Inch	mm	Inch	mm	Inch	mm	Inch	mm	Inch	mm	Inch	mm	Inch
04	4.760	0.1874	5.560	0.2189	6.350	0.2500	7.140	0.2811	7.940	0.3126	8.730	0.3437	9.530	0.3752	11.110	0.4374
05	4.760	0.1874	5.560	0.2189	6.350	0.2500	7.140	0.2811	7.940	0.3126	8.730	0.3437	9.530	0.3752	11.110	0.4374
06	4.760	0.1874	5.560	0.2189	6.350	0.2500	7.140	0.2811	7.940	0.3126	8.730	0.3437	9.530	0.3752	11.110	0.4374
07	4.760	0.1874	5.560	0.2189	6.350	0.2500	7.140	0.2811	7.940	0.3126	8.730	0.3437	9.530	0.3752	11.110	0.4374
08	4.760	0.1874	5.560	0.2189	6.350	0.2500	7.140	0.2811	7.940	0.3126	8.730	0.3437	9.530	0.3752	11.110	0.4374
10	4.760	0.1874	5.560	0.2189	6.350	0.2500	7.140	0.2811	7.940	0.3126	8.730	0.3437	9.530	0.3752	11.110	0.4374
11	-	-	-	-	6.350	0.2500	7.140	0.2811	7.940	0.3126	8.730	0.3437	9.530	0.3752	11.110	0.4374
12	-	-	-	-	6.350	0.2500	7.140	0.2811	7.940	0.3126	8.730	0.3437	9.530	0.3752	11.110	0.4374
14	-	-	-	-	6.350	0.2500	7.140	0.2811	7.940	0.3126	8.730	0.3437	9.530	0.3752	11.110	0.4374
16	-	-	-	-	6.350	0.2500	7.140	0.2811	7.940	0.3126	8.730	0.3437	9.530	0.3752	11.110	0.4374
18	-	-	-	-	-	-	-	-	7.940	0.3126	8.730	0.3437	9.530	0.3752	11.110	0.4374
20	-	-	-	-	-	-	-	-	-	-	-	-	9.530	0.3752	11.110	0.4374
22	-	-	-	-	-	-	-	-	-	-	-	-	9.530	0.3752	11.110	0.4374
24	-	-	-	-	-	-	-	-	-	-	-	-	9.530	0.3752	11.110	0.4374
28	-	-	-	-	-	-	-	-	-	-	-	-	-	-	-	-
32	-	-	-	-	-	-	-	-	-	-	-	-	-	-	-	-

EN4537 2F continued on pg 324. ►

Specifications

EN4537 2F

Diameter Code	Length L_2 -0.100 mm / -0.400 mm -0.0039 Inch / -0.0157 Inch													
	016		018		020		022		024		028		032	
	mm	Inch	mm	Inch	mm	Inch	mm	Inch	mm	Inch	mm	Inch	mm	Inch
04	12.700	0.5000	-	-	-	-	-	-	-	-	-	-	-	-
05	12.700	0.5000	14.290	0.5626	15.880	0.6252	-	-	-	-	-	-	-	-
06	12.700	0.5000	14.290	0.5626	15.880	0.6252	17.460	0.6874	19.050	0.7500	-	-	-	-
07	12.700	0.5000	14.290	0.5626	15.880	0.6252	17.460	0.6874	19.050	0.7500	22.230	0.8752	-	-
08	12.700	0.5000	14.290	0.5626	15.880	0.6252	17.460	0.6874	19.050	0.7500	22.230	0.8752	-	-
10	12.700	0.5000	14.290	0.5626	15.880	0.6252	17.460	0.6874	19.050	0.7500	22.230	0.8752	25.400	1.0000
11	12.700	0.5000	14.290	0.5626	15.880	0.6252	17.460	0.6874	19.050	0.7500	22.230	0.8752	25.400	1.0000
12	12.700	0.5000	14.290	0.5626	15.880	0.6252	17.460	0.6874	19.050	0.7500	22.230	0.8752	25.400	1.0000
14	12.700	0.5000	14.290	0.5626	15.880	0.6252	17.460	0.6874	19.050	0.7500	22.230	0.8752	25.400	1.0000
16	12.700	0.5000	14.290	0.5626	15.880	0.6252	17.460	0.6874	19.050	0.7500	22.230	0.8752	25.400	1.0000
18	12.700	0.5000	14.290	0.5626	15.880	0.6252	17.460	0.6874	19.050	0.7500	22.230	0.8752	25.400	1.0000
20	12.700	0.5000	14.290	0.5626	15.880	0.6252	17.460	0.6874	19.050	0.7500	22.230	0.8752	25.400	1.0000
22	12.700	0.5000	14.290	0.5626	15.880	0.6252	17.460	0.6874	19.050	0.7500	22.230	0.8752	25.400	1.0000
24	12.700	0.5000	14.290	0.5626	15.880	0.6252	17.460	0.6874	19.050	0.7500	22.230	0.8752	25.400	1.0000
28	12.700	0.5000	14.290	0.5626	15.880	0.6252	17.460	0.6874	19.050	0.7500	22.230	0.8752	25.400	1.0000
32	12.700	0.5000	14.290	0.5626	15.880	0.6252	17.460	0.6874	19.050	0.7500	22.230	0.8752	25.400	1.0000

Designation

EN4537-2F
Number of Standard

04
Diameter Code

T
Surface Treatment
No Code: None
T: Passivated

006
Length Code

Part Number Example
EN4535 2F 04 T 006

Bearing Materials:

Material
EN3161 / 1.4545 / 17-4PH H1150

Liner
FRASLIP F per EN2311 / SAE AS81934

Technical Specification
EN2311 / SAE AS81934

** Inch dimensions are for reference only. | * Permanently marked in non-functional area.*

Specifications

EN4537 2F

Diameter Code	Length L_2 -0.100 mm / -0.400 mm -0.0039 Inch / -0.0157 Inch													
	036		040		044		048		052		056		060	
	mm	Inch	mm	Inch	mm	Inch	mm	Inch	mm	Inch	mm	Inch	mm	Inch
04	-	-	-	-	-	-	-	-	-	-	-	-	-	-
05	-	-	-	-	-	-	-	-	-	-	-	-	-	-
06	-	-	-	-	-	-	-	-	-	-	-	-	-	-
07	-	-	-	-	-	-	-	-	-	-	-	-	-	-
08	-	-	-	-	-	-	-	-	-	-	-	-	-	-
10	28.580	1.1252	31.750	1.2500	34.930	1.3752	-	-	-	-	-	-	-	-
11	28.580	1.1252	31.750	1.2500	34.930	1.3752	38.100	1.5000	41.280	1.6252	-	-	-	-
12	28.580	1.1252	31.750	1.2500	34.930	1.3752	38.100	1.5000	41.280	1.6252	-	-	-	-
14	28.580	1.1252	31.750	1.2500	34.930	1.3752	38.100	1.5000	41.280	1.6252	44.450	1.7500	47.630	1.8752
16	28.580	1.1252	31.750	1.2500	34.930	1.3752	38.100	1.5000	41.280	1.6252	44.450	1.7500	47.630	1.8752
18	28.580	1.1252	31.750	1.2500	34.930	1.3752	38.100	1.5000	41.280	1.6252	44.450	1.7500	47.630	1.8752
20	28.580	1.1252	31.750	1.2500	34.930	1.3752	38.100	1.5000	41.280	1.6252	44.450	1.7500	47.630	1.8752
22	28.580	1.1252	31.750	1.2500	34.930	1.3752	38.100	1.5000	41.280	1.6252	44.450	1.7500	47.630	1.8752
24	28.580	1.1252	31.750	1.2500	34.930	1.3752	38.100	1.5000	41.280	1.6252	44.450	1.7500	47.630	1.8752
28	28.580	1.1252	31.750	1.2500	34.930	1.3752	38.100	1.5000	41.280	1.6252	44.450	1.7500	47.630	1.8752
32	28.580	1.1252	31.750	1.2500	34.930	1.3752	38.100	1.5000	41.280	1.6252	44.450	1.7500	47.630	1.8752

Diameter Code	Length L_2 -0.100 mm / -0.400 mm -0.0039 Inch / -0.0157 Inch													
	064		068		072		076		080		088		096	
	mm	Inch	mm	Inch	mm	Inch	mm	Inch	mm	Inch	mm	Inch	mm	Inch
04	-	-	-	-	-	-	-	-	-	-	-	-	-	-
05	-	-	-	-	-	-	-	-	-	-	-	-	-	-
06	-	-	-	-	-	-	-	-	-	-	-	-	-	-
07	-	-	-	-	-	-	-	-	-	-	-	-	-	-
08	-	-	-	-	-	-	-	-	-	-	-	-	-	-
10	-	-	-	-	-	-	-	-	-	-	-	-	-	-
11	-	-	-	-	-	-	-	-	-	-	-	-	-	-
12	-	-	-	-	-	-	-	-	-	-	-	-	-	-
14	-	-	-	-	-	-	-	-	-	-	-	-	-	-
16	50.800	2.0000	-	-	-	-	-	-	-	-	-	-	-	-
18	50.800	2.0000	53.980	2.1252	-	-	-	-	-	-	-	-	-	-
20	50.800	2.0000	53.980	2.1252	-	-	-	-	-	-	-	-	-	-
22	50.800	2.0000	53.980	2.1252	-	-	-	-	-	-	-	-	-	-
24	50.800	2.0000	53.980	2.1252	57.150	2.2500	60.330	2.3752	63.500	2.5000	69.850	2.7500	-	-
28	50.800	2.0000	53.980	2.1252	57.150	2.2500	60.330	2.3752	63.500	2.5000	69.850	2.7500	76.200	3.0000
32	50.800	2.0000	53.980	2.1252	57.150	2.2500	60.330	2.3752	63.500	2.5000	69.850	2.7500	76.200	3.0000

Contact

USA: KAMATICS CORPORATION 1330 Blue Hills Avenue Bloomfield, CT 06002 USA | **Tel:** +1 860 243 9704 | **E-mail:** KSB@kaman.com
GERMANY: RWG GERMANY GmbH Medbacher Weg 1 D-91315 Höchstadt a. d. Aisch | **Tel:** +49 (91 93) 50105 100 | **E-mail:** RWG@kaman.com

Journal Bearings

FBFA…A… / FBFA…C…

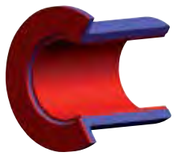

- Self-Lubricating
- Aluminium
- CRES
- Flanged Type
- According to Specification EN2311 / SAE AS81934 / 2

Specifications

Diameter Code	Nominal Diameter		d		D		Δ Dmp		Δ Dmp		L_1		D_1	
			-0.025	-0.0010			Code C		Code A		-0.127	-0.0050	-0.508	-0.0200
	mm	Inch	mm	Inch	mm	Inch	mm	Inch	mm	Inch	mm	Inch	mm	Inch
04	6.350	0.2500	6.388	0.2515	9.550	0.3760	-0.012	-0.0005	±0.012	±0.0005	1.587	0.0625	19.050	0.7500
05	7.937	0.3125	7.975	0.3140	11.140	0.4386	-0.012	-0.0005	±0.012	±0.0005	1.587	0.0625	20.625	0.8120
06	9.525	0.3750	9.563	0.3765	12.730	0.5012	-0.012	-0.0005	±0.012	±0.0005	1.587	0.0625	22.225	0.8750
07	11.112	0.4375	11.150	0.4390	14.320	0.5638	-0.012	-0.0005	±0.012	±0.0005	1.587	0.0625	23.800	0.9370
08	12.700	0.5000	12.738	0.5015	15.913	0.6265	-0.012	-0.0005	±0.012	±0.0005	1.587	0.0625	25.400	1.0000
09	14.287	0.5625	14.325	0.5640	17.505	0.6892	-0.012	-0.0005	±0.012	±0.0005	1.587	0.0625	28.575	1.1250
10	15.875	0.6250	15.913	0.6265	20.680	0.8142	-0.012	-0.0005	±0.012	±0.0005	1.587	0.0625	31.750	1.2500
11	17.462	0.6875	17.500	0.6890	22.268	0.8767	-0.012	-0.0005	±0.012	±0.0005	1.587	0.0625	34.925	1.3750
12	19.050	0.7500	19.088	0.7515	23.858	0.9393	-0.012	-0.0005	±0.012	±0.0005	1.587	0.0625	38.100	1.5000
14	22.225	0.8750	22.263	0.8765	27.038	1.0645	-0.012	-0.0005	±0.012	±0.0005	1.587	0.0625	41.275	1.6250
16	25.400	1.0000	25.438	1.0015	30.221	1.1898	-0.012	-0.0005	±0.012	±0.0005	1.587	0.0625	44.450	1.7500
18	28.575	1.1250	28.613	1.1265	33.396	1.3148	-0.012	-0.0005	±0.012	±0.0005	2.380	0.0937	47.625	1.8750
20	31.750	1.2500	31.788	1.2515	36.571	1.4398	-0.012	-0.0005	±0.012	±0.0005	2.380	0.0937	50.800	2.0000
22	34.925	1.3750	34.963	1.3765	39.746	1.5648	-0.012	-0.0005	±0.012	±0.0005	2.380	0.0937	53.975	2.1250
24	38.100	1.5000	38.138	1.5015	44.508	1.7523	-0.012	-0.0005	±0.012	±0.0005	2.380	0.0937	57.150	2.2500
26	41.275	1.6250	41.313	1.6265	47.683	1.8773	-0.012	-0.0005	±0.012	±0.0005	2.380	0.0937	60.325	2.3750
28	44.450	1.7500	44.488	1.7515	50.858	2.0023	-0.012	-0.0005	±0.012	±0.0005	2.380	0.0937	63.500	2.5000
32	50.800	2.0000	50.838	2.0015	57.208	2.2523	-0.012	-0.0005	±0.012	±0.0005	2.380	0.0937	69.850	2.7500

NOTES

Static Limit Load C_s:

Material Code A: $C_s = 0.345 \cdot d \cdot (L_1 + L_2 - 3.3)$ [kN]
Material Code C: $C_s = 0.541 \cdot d \cdot (L_1 + L_2 - 3.3)$ [kN]

Static Axial Limit Loads C_a:

Material Code A: $C_a = 0.16\ [(D_1 - 1.5)^2 - (d + 2.5)^2]$ [kN]
Material Code C: $C_a = 0.34\ [(D_1 - 1.5)^2 - (d + 2.5)^2]$ [kN]

Schematic Drawing

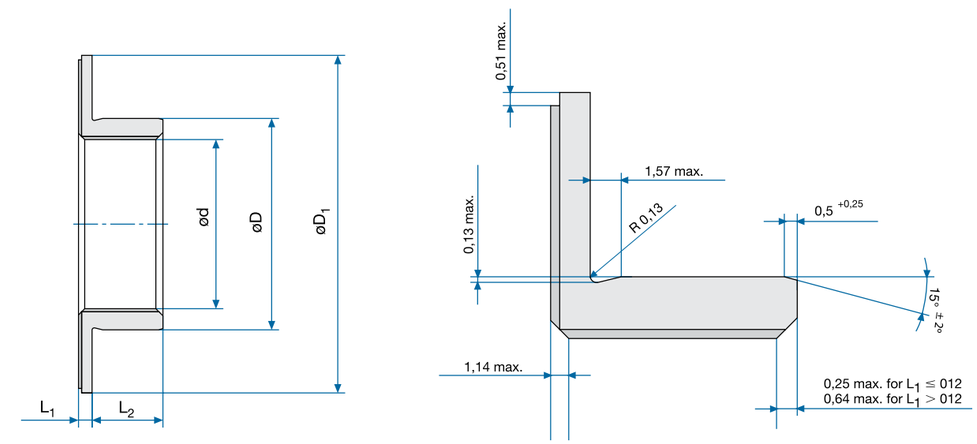

Specifications

FBFA…A… / FBFA…C…

Diameter Code	Length L -0.127 mm / -0.381 mm -0.0050 Inch / -0.0150 Inch															
	005		006		007		008		009		010		011		012	
	mm	Inch	mm	Inch	mm	Inch	mm	Inch	mm	Inch	mm	Inch	mm	Inch	mm	Inch
04	3.960	0.1559	4.750	0.1870	5.537	0.2180	6.350	0.2500	7.137	0.2810	7.925	0.3120	8.710	0.3429	9.525	0.3750
05	3.960	0.1559	4.750	0.1870	5.537	0.2180	6.350	0.2500	7.137	0.2810	7.925	0.3120	8.710	0.3429	9.525	0.3750
06	3.960	0.1559	4.750	0.1870	5.537	0.2180	6.350	0.2500	7.137	0.2810	7.925	0.3120	8.710	0.3429	9.525	0.3750
07	3.960	0.1559	4.750	0.1870	5.537	0.2180	6.350	0.2500	7.137	0.2810	7.925	0.3120	8.710	0.3429	9.525	0.3750
08	3.960	0.1559	4.750	0.1870	5.537	0.2180	6.350	0.2500	7.137	0.2810	7.925	0.3120	8.710	0.3429	9.525	0.3750
09	3.960	0.1559	4.750	0.1870	5.537	0.2180	6.350	0.2500	7.137	0.2810	7.925	0.3120	8.710	0.3429	9.525	0.3750
10	3.960	0.1559	4.750	0.1870	5.537	0.2180	6.350	0.2500	7.137	0.2810	7.925	0.3120	8.710	0.3429	9.525	0.3750
11	3.960	0.1559	4.750	0.1870	5.537	0.2180	6.350	0.2500	7.137	0.2810	7.925	0.3120	8.710	0.3429	9.525	0.3750
12	3.960	0.1559	4.750	0.1870	5.537	0.2180	6.350	0.2500	7.137	0.2810	7.925	0.3120	8.710	0.3429	9.525	0.3750
14	3.960	0.1559	4.750	0.1870	5.537	0.2180	6.350	0.2500	7.137	0.2810	7.925	0.3120	8.710	0.3429	9.525	0.3750
16	3.960	0.1559	4.750	0.1870	5.537	0.2180	6.350	0.2500	7.137	0.2810	7.925	0.3120	8.710	0.3429	9.525	0.3750
18	3.960	0.1559	4.750	0.1870	5.537	0.2180	6.350	0.2500	7.137	0.2810	7.925	0.3120	8.710	0.3429	9.525	0.3750
20	3.960	0.1559	4.750	0.1870	5.537	0.2180	6.350	0.2500	7.137	0.2810	7.925	0.3120	8.710	0.3429	9.525	0.3750
22	3.960	0.1559	4.750	0.1870	5.537	0.2180	6.350	0.2500	7.137	0.2810	7.925	0.3120	8.710	0.3429	9.525	0.3750
24	3.960	0.1559	4.750	0.1870	5.537	0.2180	6.350	0.2500	7.137	0.2810	7.925	0.3120	8.710	0.3429	9.525	0.3750
26	3.960	0.1559	4.750	0.1870	5.537	0.2180	6.350	0.2500	7.137	0.2810	7.925	0.3120	8.710	0.3429	9.525	0.3750
28	3.960	0.1559	4.750	0.1870	5.537	0.2180	6.350	0.2500	7.137	0.2810	7.925	0.3120	8.710	0.3429	9.525	0.3750
32	3.960	0.1559	4.750	0.1870	5.537	0.2180	6.350	0.2500	7.137	0.2810	7.925	0.3120	8.710	0.3429	9.525	0.3750

FBFA…A… / FBFA…C… continued on pg 328. ►

Specifications

FBFA…A… / FBFA…C…

Diameter Code	Length L -0.127 mm / -0.381 mm -0.0050 Inch / -0.0150 Inch															
	014		016		018		020		022		024		028		032	
	mm	Inch	mm	Inch	mm	Inch	mm	Inch	mm	Inch	mm	Inch	mm	Inch	mm	Inch
04	11.100	0.4370	12.700	0.5000	14.275	0.5620	15.875	0.6250	17.450	0.6870	19.050	0.7500	22.225	0.8750	25.400	1.0000
05	11.100	0.4370	12.700	0.5000	14.275	0.5620	15.875	0.6250	17.450	0.6870	19.050	0.7500	22.225	0.8750	25.400	1.0000
06	11.100	0.4370	12.700	0.5000	14.275	0.5620	15.875	0.6250	17.450	0.6870	19.050	0.7500	22.225	0.8750	25.400	1.0000
07	11.100	0.4370	12.700	0.5000	14.275	0.5620	15.875	0.6250	17.450	0.6870	19.050	0.7500	22.225	0.8750	25.400	1.0000
08	11.100	0.4370	12.700	0.5000	14.275	0.5620	15.875	0.6250	17.450	0.6870	19.050	0.7500	22.225	0.8750	25.400	1.0000
09	11.100	0.4370	12.700	0.5000	14.275	0.5620	15.875	0.6250	17.450	0.6870	19.050	0.7500	22.225	0.8750	25.400	1.0000
10	11.100	0.4370	12.700	0.5000	14.275	0.5620	15.875	0.6250	17.450	0.6870	19.050	0.7500	22.225	0.8750	25.400	1.0000
11	11.100	0.4370	12.700	0.5000	14.275	0.5620	15.875	0.6250	17.450	0.6870	19.050	0.7500	22.225	0.8750	25.400	1.0000
12	11.100	0.4370	12.700	0.5000	14.275	0.5620	15.875	0.6250	17.450	0.6870	19.050	0.7500	22.225	0.8750	25.400	1.0000
14	11.100	0.4370	12.700	0.5000	14.275	0.5620	15.875	0.6250	17.450	0.6870	19.050	0.7500	22.225	0.8750	25.400	1.0000
16	11.100	0.4370	12.700	0.5000	14.275	0.5620	15.875	0.6250	17.450	0.6870	19.050	0.7500	22.225	0.8750	25.400	1.0000
18	11.100	0.4370	12.700	0.5000	14.275	0.5620	15.875	0.6250	17.450	0.6870	19.050	0.7500	22.225	0.8750	25.400	1.0000
20	11.100	0.4370	12.700	0.5000	14.275	0.5620	15.875	0.6250	17.450	0.6870	19.050	0.7500	22.225	0.8750	25.400	1.0000
22	11.100	0.4370	12.700	0.5000	14.275	0.5620	15.875	0.6250	17.450	0.6870	19.050	0.7500	22.225	0.8750	25.400	1.0000
24	11.100	0.4370	12.700	0.5000	14.275	0.5620	15.875	0.6250	17.450	0.6870	19.050	0.7500	22.225	0.8750	25.400	1.0000
26	11.100	0.4370	12.700	0.5000	14.275	0.5620	15.875	0.6250	17.450	0.6870	19.050	0.7500	22.225	0.8750	25.400	1.0000
28	11.100	0.4370	12.700	0.5000	14.275	0.5620	15.875	0.6250	17.450	0.6870	19.050	0.7500	22.225	0.8750	25.400	1.0000
32	11.100	0.4370	12.700	0.5000	14.275	0.5620	15.875	0.6250	17.450	0.6870	19.050	0.7500	22.225	0.8750	25.400	1.0000

Designation

FBFA
Number of Standard

08
Diameter Code

A
Material

010
Length Code

P
Surface Treatment
No Code: None
P: Cadmium Plated (Material Code C Only)

Part Number Example
FBFA 08 A 010 P

Bearing Materials:

Material
A: EN2318 / Alloy 2024 / 3.1354; Anodized
C: EN3161 / 1.4548 / 17-4PH H1150

Liner
FRASLIP F per EN2311 / SAE AS81934

Technical Specification
EN2311 / SAE AS81934

** Inch dimensions are for reference only. | * Permanently marked in non-functional area.*

Specifications

FBFA…A… / FBFA…C…

Diameter Code	Length L -0.127 mm / -0.381 mm -0.0050 Inch / -0.0150 Inch													
	036		040		044		048		052		056		060	
	mm	Inch	mm	Inch	mm	Inch	mm	Inch	mm	Inch	mm	Inch	mm	Inch
04	28.575	1.1250	31.750	1.2500	34.925	1.3750	38.100	1.5000	41.275	1.6250	44.450	1.7500	47.625	1.8750
05	28.575	1.1250	31.750	1.2500	34.925	1.3750	38.100	1.5000	41.275	1.6250	44.450	1.7500	47.625	1.8750
06	28.575	1.1250	31.750	1.2500	34.925	1.3750	38.100	1.5000	41.275	1.6250	44.450	1.7500	47.625	1.8750
07	28.575	1.1250	31.750	1.2500	34.925	1.3750	38.100	1.5000	41.275	1.6250	44.450	1.7500	47.625	1.8750
08	28.575	1.1250	31.750	1.2500	34.925	1.3750	38.100	1.5000	41.275	1.6250	44.450	1.7500	47.625	1.8750
09	28.575	1.1250	31.750	1.2500	34.925	1.3750	38.100	1.5000	41.275	1.6250	44.450	1.7500	47.625	1.8750
10	28.575	1.1250	31.750	1.2500	34.925	1.3750	38.100	1.5000	41.275	1.6250	44.450	1.7500	47.625	1.8750
11	28.575	1.1250	31.750	1.2500	34.925	1.3750	38.100	1.5000	41.275	1.6250	44.450	1.7500	47.625	1.8750
12	28.575	1.1250	31.750	1.2500	34.925	1.3750	38.100	1.5000	41.275	1.6250	44.450	1.7500	47.625	1.8750
14	28.575	1.1250	31.750	1.2500	34.925	1.3750	38.100	1.5000	41.275	1.6250	44.450	1.7500	47.625	1.8750
16	28.575	1.1250	31.750	1.2500	34.925	1.3750	38.100	1.5000	41.275	1.6250	44.450	1.7500	47.625	1.8750
18	28.575	1.1250	31.750	1.2500	34.925	1.3750	38.100	1.5000	41.275	1.6250	44.450	1.7500	47.625	1.8750
20	28.575	1.1250	31.750	1.2500	34.925	1.3750	38.100	1.5000	41.275	1.6250	44.450	1.7500	47.625	1.8750
22	28.575	1.1250	31.750	1.2500	34.925	1.3750	38.100	1.5000	41.275	1.6250	44.450	1.7500	47.625	1.8750
24	28.575	1.1250	31.750	1.2500	34.925	1.3750	38.100	1.5000	41.275	1.6250	44.450	1.7500	47.625	1.8750
26	28.575	1.1250	31.750	1.2500	34.925	1.3750	38.100	1.5000	41.275	1.6250	44.450	1.7500	47.625	1.8750
28	28.575	1.1250	31.750	1.2500	34.925	1.3750	38.100	1.5000	41.275	1.6250	44.450	1.7500	47.625	1.8750
32	28.575	1.1250	31.750	1.2500	34.925	1.3750	38.100	1.5000	41.275	1.6250	44.450	1.7500	47.625	1.8750

Diameter Code	Length L -0.127 mm / -0.381 mm -0.0050 Inch / -0.0150 Inch													
	064		068		072		076		080		088		096	
	mm	Inch	mm	Inch	mm	Inch	mm	Inch	mm	Inch	mm	Inch	mm	Inch
04	50.800	2.0000	53.975	2.1250	57.150	2.2500	60.325	2.3750	63.500	2.5000	69.850	2.7500	76.200	3.0000
05	50.800	2.0000	53.975	2.1250	57.150	2.2500	60.325	2.3750	63.500	2.5000	69.850	2.7500	76.200	3.0000
06	50.800	2.0000	53.975	2.1250	57.150	2.2500	60.325	2.3750	63.500	2.5000	69.850	2.7500	76.200	3.0000
07	50.800	2.0000	53.975	2.1250	57.150	2.2500	60.325	2.3750	63.500	2.5000	69.850	2.7500	76.200	3.0000
08	50.800	2.0000	53.975	2.1250	57.150	2.2500	60.325	2.3750	63.500	2.5000	69.850	2.7500	76.200	3.0000
09	50.800	2.0000	53.975	2.1250	57.150	2.2500	60.325	2.3750	63.500	2.5000	69.850	2.7500	76.200	3.0000
10	50.800	2.0000	53.975	2.1250	57.150	2.2500	60.325	2.3750	63.500	2.5000	69.850	2.7500	76.200	3.0000
11	50.800	2.0000	53.975	2.1250	57.150	2.2500	60.325	2.3750	63.500	2.5000	69.850	2.7500	76.200	3.0000
12	50.800	2.0000	53.975	2.1250	57.150	2.2500	60.325	2.3750	63.500	2.5000	69.850	2.7500	76.200	3.0000
14	50.800	2.0000	53.975	2.1250	57.150	2.2500	60.325	2.3750	63.500	2.5000	69.850	2.7500	76.200	3.0000
16	50.800	2.0000	53.975	2.1250	57.150	2.2500	60.325	2.3750	63.500	2.5000	69.850	2.7500	76.200	3.0000
18	50.800	2.0000	53.975	2.1250	57.150	2.2500	60.325	2.3750	63.500	2.5000	69.850	2.7500	76.200	3.0000
20	50.800	2.0000	53.975	2.1250	57.150	2.2500	60.325	2.3750	63.500	2.5000	69.850	2.7500	76.200	3.0000
22	50.800	2.0000	53.975	2.1250	57.150	2.2500	60.325	2.3750	63.500	2.5000	69.850	2.7500	76.200	3.0000
24	50.800	2.0000	53.975	2.1250	57.150	2.2500	60.325	2.3750	63.500	2.5000	69.850	2.7500	76.200	3.0000
26	50.800	2.0000	53.975	2.1250	57.150	2.2500	60.325	2.3750	63.500	2.5000	69.850	2.7500	76.200	3.0000
28	50.800	2.0000	53.975	2.1250	57.150	2.2500	60.325	2.3750	63.500	2.5000	69.850	2.7500	76.200	3.0000
32	50.800	2.0000	53.975	2.1250	57.150	2.2500	60.325	2.3750	63.500	2.5000	69.850	2.7500	76.200	3.0000

Contact

USA: KAMATICS CORPORATION 1330 Blue Hills Avenue Bloomfield, CT 06002 USA | **Tel:** +1 860 243 9704 | **E-mail:** KSB@kaman.com
GERMANY: RWG GERMANY GmbH Medbacher Weg 1 D-91315 Höchstadt a. d. Aisch | **Tel:** +49 (91 93) 50105 100 | **E-mail:** RWG@kaman.com

Journal Bearings

FBFA1 / FBFA2

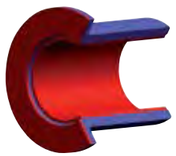

- Self-Lubricating
- Aluminium
- CRES
- Flanged Type

Specifications

Diameter Code	Nominal Diameter		d		D		L_1		D_1	
							-0.130	-0.0050	-0.500	-0.0197
	mm	Inch	mm	Inch	mm	Inch	mm	Inch	mm	Inch
04	6.350	0.2500	6.358 to 6.380	0.2503 to 0.2512	9.538 to 9.550	0.3755 to 0.3760	1.600	0.0630	12.700	0.5000
05	7.937	0.3125	7.950 to 7.973	0.3130 to 0.3139	11.128 to 11.140	0.4381 to 0.4386	1.600	0.0630	14.300	0.5630
06	9.525	0.3750	9.540 to 9.563	0.3756 to 0.3765	12.715 to 12.730	0.5006 to 0.5012	1.600	0.0630	15.900	0.6260
07	11.112	0.4375	11.164 to 11.188	0.4395 to 0.4405	15.900 to 15.924	0.6260 to 0.6269	1.600	0.0630	19.100	0.7520
08	12.700	0.5000	12.715 to 12.741	0.5006 to 0.5016	17.483 to 17.496	0.6883 to 0.6888	1.600	0.0630	22.200	0.8740
10	15.875	0.6250	15.893 to 15.918	0.6257 to 0.6267	20.660 to 20.673	0.8134 to 0.8139	1.600	0.0630	25.400	1.0000
12	19.050	0.7500	19.070 to 19.101	0.7508 to 0.7520	23.835 to 23.848	0.9384 to 0.9389	1.600	0.0630	28.600	1.1260
14	22.225	0.8750	22.248 to 22.278	0.8759 to 0.8771	27.013 to 27.026	1.0635 to 1.0640	1.600	0.0630	31.800	1.2520
16	25.400	1.0000	25.425 to 25.456	1.0010 to 1.0022	30.188 to 30.201	1.1885 to 1.1890	1.600	0.0630	34.900	1.3740
18	28.575	1.1250	28.608 to 28.649	1.1263 to 1.1279	33.368 to 33.383	1.3137 to 1.3143	2.400	0.0945	41.300	1.6260
20	31.750	1.2500	31.780 to 31.821	1.2512 to 1.2528	38.133 to 38.148	1.5013 to 1.5019	2.400	0.0945	44.400	1.7480
22	34.925	1.3750	34.958 to 34.999	1.3763 to 1.3779	41.308 to 41.323	1.6263 to 1.6269	2.400	0.0945	47.600	1.8740
24	38.100	1.5000	38.133 to 38.174	1.5013 to 1.5029	44.483 to 44.498	1.7513 to 1.7519	2.400	0.0945	50.800	2.0000
28	44.450	1.7500	44.493 to 44.534	1.7517 to 1.7533	50.841 to 50.858	2.0016 to 2.0023	2.400	0.0945	57.200	2.2520
32	50.800	2.0000	50.843 to 50.889	2.0017 to 2.0035	57.191 to 57.208	2.2516 to 2.2523	2.400	0.0945	63.500	2.5000

Designation

FBFA
Number of Standard

08
Diameter Code

010
Length Code

2
Material

Part Number Example
FBFA 2 - 08 10

Bearing Materials:

Material
FBFA1: EN3490 / 1.4044.6 / AISI 431
FBFA2: EN2086 / 3.1924 / Alloy 2618A; Anodized

Liner
FRASLIP F per EN2311 / SAE AS81934

Technical Specification
MIL-B-8943

** Inch dimensions are for reference only. | * Permanently marked in non-functional area.*

Schematic Drawing

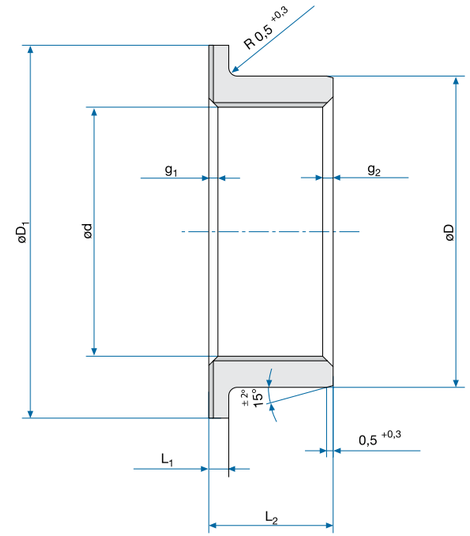

Specifications

FBFA1 / FBFA2

Diameter Code	g_1 x 45°		g_2 x 45°		Length L_2 -0.127 mm / -0.381 mm -0.0050 Inch / -0.0150 Inch											
	+0.250	+0.0098	+0.250	+0.0098	004		005		006		008		010		012	
	mm	Inch	mm	Inch	mm	Inch	mm	Inch	mm	Inch	mm	Inch	mm	Inch	mm	Inch
04	0.500	0.0197	0.250	0.0098	3.170	0.1248	3.9700	0.1563	4.760	0.1874	6.350	0.2500	7.940	0.3126	9.520	0.3748
05	0.500	0.0197	0.250	0.0098	3.170	0.1248	3.9700	0.1563	4.760	0.1874	6.350	0.2500	7.940	0.3126	9.520	0.3748
06	0.500	0.0197	0.250	0.0098	3.170	0.1248	3.9700	0.1563	4.760	0.1874	6.350	0.2500	7.940	0.3126	9.520	0.3748
07	0.500	0.0197	0.250	0.0098	3.170	0.1248	3.9700	0.1563	4.760	0.1874	6.350	0.2500	7.940	0.3126	9.520	0.3748
08	0.500	0.0197	0.250	0.0098	3.170	0.1248	3.9700	0.1563	4.760	0.1874	6.350	0.2500	7.940	0.3126	9.520	0.3748
10	0.500	0.0197	0.250	0.0098	3.170	0.1248	3.9700	0.1563	4.760	0.1874	6.350	0.2500	7.940	0.3126	9.520	0.3748
12	0.500	0.0197	0.250	0.0098	3.170	0.1248	3.9700	0.1563	4.760	0.1874	6.350	0.2500	7.940	0.3126	9.520	0.3748
14	1.000	0.0394	0.510	0.0201	3.170	0.1248	3.9700	0.1563	4.760	0.1874	6.350	0.2500	7.940	0.3126	9.520	0.3748
16	1.000	0.0394	0.510	0.0201	3.170	0.1248	3.9700	0.1563	4.760	0.1874	6.350	0.2500	7.940	0.3126	9.520	0.3748
18	1.000	0.0394	0.510	0.0201	-	-	-	-	-	-	-	-	-	-	9.520	0.3748
20	1.000	0.0394	0.510	0.0201	-	-	-	-	-	-	-	-	-	-	9.520	0.3748
22	1.000	0.0394	0.510	0.0201	-	-	-	-	-	-	-	-	-	-	9.520	0.3748
24	1.000	0.0394	0.510	0.0201	-	-	-	-	-	-	-	-	-	-	9.520	0.3748
28	1.000	0.0394	0.510	0.0201	-	-	-	-	-	-	-	-	-	-	-	-
32	1.000	0.0394	0.510	0.0201	-	-	-	-	-	-	-	-	-	-	-	-

NOTES

Static Radial Limit Loads C_s:

FBFA1: $C_s = 0.541 \cdot d \cdot (L_2 - 3.3)$ [kN]
FBFA2: $C_s = 0.345 \cdot d \cdot (L_2 - 3.3)$ [kN]

Static Axial Limit Loads C_a:

FBFA1: $C_a = 0.34 \cdot [(A - 1.5)^2 - (d + 2.5)^2]$ [kN]
FBFA2: $C_a = 0.16 \cdot [(A - 1.5)^2 - (d + 2.5)^2]$ [kN]

FBFA1 / FBFA2 continued on pg 332. ►

Specifications

FBFA1 / FBFA2

Diameter Code	Length L_2 -0.127 mm / -0.381 mm -0.0050 Inch / -0.0150 Inch													
	014		016		018		020		024		026		028	
	mm	Inch	mm	Inch	mm	Inch	mm	Inch	mm	Inch	mm	Inch	mm	Inch
04	11.110	0.4374	-	-	-	-	-	-	-	-	-	-	-	-
05	11.110	0.4374	12.700	0.5000	14.290	0.5626	-	0.0000	-	-	-	-	-	-
06	11.110	0.4374	12.700	0.5000	14.290	0.5626	15.870	0.6248	-	-	-	-	-	-
07	11.110	0.4374	12.700	0.5000	14.290	0.5626	15.870	0.6248	19.050	0.7500	20.640	0.8126	-	-
08	11.110	0.4374	12.700	0.5000	14.290	0.5626	15.870	0.6248	19.050	0.7500	20.640	0.8126	22.230	0.8752
10	11.110	0.4374	12.700	0.5000	14.290	0.5626	15.870	0.6248	19.050	0.7500	20.640	0.8126	22.230	0.8752
12	11.110	0.4374	12.700	0.5000	14.290	0.5626	15.870	0.6248	19.050	0.7500	20.640	0.8126	22.230	0.8752
14	11.110	0.4374	12.700	0.5000	14.290	0.5626	15.870	0.6248	19.050	0.7500	20.640	0.8126	22.230	0.8752
16	11.110	0.4374	12.700	0.5000	14.290	0.5626	15.870	0.6248	19.050	0.7500	20.640	0.8126	22.230	0.8752
18	11.110	0.4374	12.700	0.5000	14.290	0.5626	15.870	0.6248	19.050	0.7500	20.640	0.8126	22.230	0.8752
20	11.110	0.4374	12.700	0.5000	14.290	0.5626	15.870	0.6248	19.050	0.7500	20.640	0.8126	22.230	0.8752
22	11.110	0.4374	12.700	0.5000	14.290	0.5626	15.870	0.6248	19.050	0.7500	20.640	0.8126	22.230	0.8752
24	11.110	0.4374	12.700	0.5000	14.290	0.5626	15.870	0.6248	19.050	0.7500	20.640	0.8126	22.230	0.8752
28	-	-	12.700	0.5000	14.290	0.5626	15.870	0.6248	19.050	0.7500	20.640	0.8126	22.230	0.8752
32	-	-	12.700	0.5000	14.290	0.5626	15.870	0.6248	19.050	0.7500	20.640	0.8126	22.230	0.8752

Specifications

FBFA1 / FBFA2

Diameter Code	Length L_2 -0.127 mm / -0.381 mm -0.0050 Inch / -0.0150 Inch													
	032		040		044		048		064		080		096	
	mm	Inch	mm	Inch	mm	Inch	mm	Inch	mm	Inch	mm	Inch	mm	Inch
04	-	-	-	-	-	-	-	-	-	-	-	-	-	-
05	-	-	-	-	-	-	-	-	-	-	-	-	-	-
06	-	-	-	-	-	-	-	-	-	-	-	-	-	-
07	-	-	-	-	-	-	-	-	-	-	-	-	-	-
08	-	-	-	-	-	-	-	-	-	-	-	-	-	-
10	25.400	1.0000	31.750	1.2500	-	-	-	-	-	-	-	-	-	-
12	25.400	1.0000	31.750	1.2500	-	-	-	-	-	-	-	-	-	-
14	25.400	1.0000	31.750	1.2500	34.920	1.3748	-	-	-	-	-	-	-	-
16	25.400	1.0000	31.750	1.2500	34.920	1.3748	-	-	-	-	-	-	-	-
18	25.400	1.0000	31.750	1.2500	34.920	1.3748	38.100	1.5000	50.800	2.0000	-	-	-	-
20	25.400	1.0000	31.750	1.2500	34.920	1.3748	38.100	1.5000	50.800	2.0000	-	-	-	-
22	25.400	1.0000	31.750	1.2500	34.920	1.3748	38.100	1.5000	50.800	2.0000	63.500	2.5000	-	-
24	25.400	1.0000	31.750	1.2500	34.920	1.3748	38.100	1.5000	50.800	2.0000	63.500	2.5000	76.200	3.0000
28	25.400	1.0000	31.750	1.2500	34.920	1.3748	38.100	1.5000	50.800	2.0000	63.500	2.5000	76.200	3.0000
32	25.400	1.0000	31.750	1.2500	34.920	1.3748	38.100	1.5000	50.800	2.0000	63.500	2.5000	76.200	3.0000

Contact

USA: KAMATICS CORPORATION 1330 Blue Hills Avenue Bloomfield, CT 06002 USA | **Tel:** +1 860 243 9704 | **Email:** KSB@kaman.com
GERMANY: RWG GERMANY GmbH Medbacher Weg 1 D-91315 Höchstadt a. d. Aisch | **Tel:** +49 (91 93) 50105 100 | **E-Mail:** RWG@kaman.com

Journal Bearings

NSA8147 / NSA8148

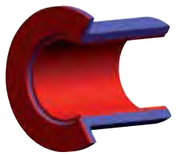

- Self-Lubricating
- Aluminium
- CRES
- Flanged Type

Specifications

Diameter Code	Nominal Diameter		d		D		L_1		D_1	
							-0.130	-0.0050	-0.500	-0.0197
	mm	Inch	mm	Inch	mm	Inch	mm	Inch	mm	Inch
04	6.350	0.2500	6.358 to 6.380	0.2503 to 0.2512	9.538 to 9.550	0.3755 to 0.3760	1.600	0.0630	12.700	0.5000
05	7.937	0.3125	7.950 to 7.973	0.3130 to 0.3139	11.128 to 11.140	0.4381 to 0.4386	1.600	0.0630	14.300	0.5630
06	9.525	0.3750	9.540 to 9.563	0.3756 to 0.3765	12.715 to 12.730	0.5006 to 0.5012	1.600	0.0630	15.900	0.6260
07	11.112	0.4375	11.164 to 11.188	0.4395 to 0.4405	15.900 to 15.924	0.6260 to 0.6269	1.600	0.0630	19.100	0.7520
08	12.700	0.5000	12.715 to 12.741	0.5006 to 0.5016	17.483 to 17.496	0.6883 to 0.6888	1.600	0.0630	22.200	0.8740
10	15.875	0.6250	15.893 to 15.918	0.6257 to 0.6267	20.660 to 20.673	0.8134 to 0.8139	1.600	0.0630	25.400	1.0000
12	19.050	0.7500	19.070 to 19.101	0.7508 to 0.7520	23.835 to 23.848	0.9384 to 0.9389	1.600	0.0630	28.600	1.1260
14	22.225	0.8750	22.248 to 22.278	0.8759 to 0.8771	27.013 to 27.026	1.0635 to 1.0640	1.600	0.0630	31.800	1.2520
16	25.400	1.0000	25.425 to 25.456	1.0010 to 1.0022	30.188 to 30.201	1.1885 to 1.1890	1.600	0.0630	34.900	1.3740
18	28.575	1.1250	28.608 to 28.649	1.1263 to 1.1279	33.368 to 33.383	1.3137 to 1.3143	2.400	0.0945	41.300	1.6260
20	31.750	1.2500	31.780 to 31.821	1.2512 to 1.2528	38.133 to 38.148	1.5013 to 1.5019	2.400	0.0945	44.400	1.7480
22	34.925	1.3750	34.958 to 34.999	1.3763 to 1.3779	41.308 to 41.323	1.6263 to 1.6269	2.400	0.0945	47.600	1.8740
24	38.100	1.5000	38.133 to 38.174	1.5013 to 1.5029	44.483 to 44.498	1.7513 to 1.7519	2.400	0.0945	50.800	2.0000
28	44.450	1.7500	44.493 to 44.534	1.7517 to 1.7533	50.841 to 50.858	2.0016 to 2.0023	2.400	0.0945	57.200	2.2520
32	50.800	2.0000	50.843 to 50.889	2.0017 to 2.0035	57.191 to 57.208	2.2516 to 2.2523	2.400	0.0945	63.500	2.5000

Designation

NSA8147
Number of Series
Number of Standard

08
Diameter Code

010
Length Code

Part Number Example
NSA8147 08 10

Bearing Materials:

Material
NSA8147: EN3490 / 1.4044.6 / AISI 431
NSA8148: EN2086 / 3.1924 / Alloy 2618A; Anodized

Liner
FRASLIP F per EN2311 / SAE AS81934

Technical Specification
MIL-B-8943

** Inch dimensions are for reference only. | * Permanently marked in non-functional area.*

Schematic Drawing

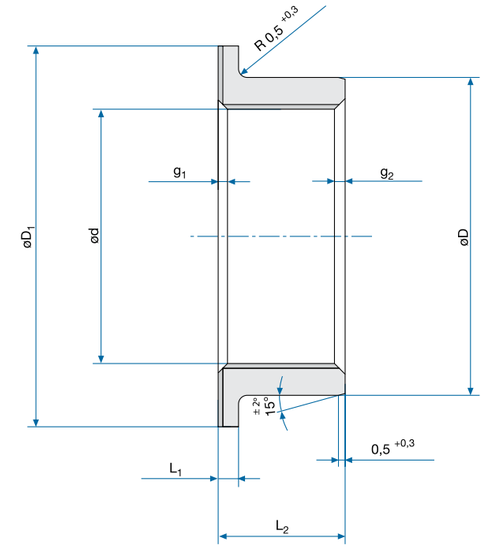

Specifications

NSA8147 / NSA8148

Diameter Code	g_1 x 45°		g_2 x 45°		Length L_2 -0.127 mm / -0.381 mm -0.0050 Inch / -0.0150 Inch											
	+0.250	+0.0098	+0.250	+0.0098	004		005		006		008		010		012	
	mm	Inch	mm	Inch	mm	Inch	mm	Inch	mm	Inch	mm	Inch	mm	Inch	mm	Inch
04	0.500	0.0197	0.250	0.0098	3.170	0.1248	3.9700	0.1563	4.760	0.1874	6.350	0.2500	7.940	0.3126	9.520	0.3748
05	0.500	0.0197	0.250	0.0098	3.170	0.1248	3.9700	0.1563	4.760	0.1874	6.350	0.2500	7.940	0.3126	9.520	0.3748
06	0.500	0.0197	0.250	0.0098	3.170	0.1248	3.9700	0.1563	4.760	0.1874	6.350	0.2500	7.940	0.3126	9.520	0.3748
07	0.500	0.0197	0.250	0.0098	3.170	0.1248	3.9700	0.1563	4.760	0.1874	6.350	0.2500	7.940	0.3126	9.520	0.3748
08	0.500	0.0197	0.250	0.0098	3.170	0.1248	3.9700	0.1563	4.760	0.1874	6.350	0.2500	7.940	0.3126	9.520	0.3748
10	0.500	0.0197	0.250	0.0098	3.170	0.1248	3.9700	0.1563	4.760	0.1874	6.350	0.2500	7.940	0.3126	9.520	0.3748
12	0.500	0.0197	0.250	0.0098	3.170	0.1248	3.9700	0.1563	4.760	0.1874	6.350	0.2500	7.940	0.3126	9.520	0.3748
14	1.000	0.0394	0.510	0.0201	3.170	0.1248	3.9700	0.1563	4.760	0.1874	6.350	0.2500	7.940	0.3126	9.520	0.3748
16	1.000	0.0394	0.510	0.0201	3.170	0.1248	3.9700	0.1563	4.760	0.1874	6.350	0.2500	7.940	0.3126	9.520	0.3748
18	1.000	0.0394	0.510	0.0201	-	-	-	-	-	-	-	-	-	-	9.520	0.3748
20	1.000	0.0394	0.510	0.0201	-	-	-	-	-	-	-	-	-	-	9.520	0.3748
22	1.000	0.0394	0.510	0.0201	-	-	-	-	-	-	-	-	-	-	9.520	0.3748
24	1.000	0.0394	0.510	0.0201	-	-	-	-	-	-	-	-	-	-	9.520	0.3748
28	1.000	0.0394	0.510	0.0201	-	-	-	-	-	-	-	-	-	-	-	-
32	1.000	0.0394	0.510	0.0201	-	-	-	-	-	-	-	-	-	-	-	-

NOTES

Static Radial Limit Loads C_s:

NSA8147: $C_s = 0.541 \cdot d \cdot (L_2 - 3.3)$ [kN]
NSA8148: $C_s = 0.345 \cdot d \cdot (L_2 - 3.3)$ [kN]

Static Axial Limit Loads C_a:

NSA8147: $C_a = 0.34 \cdot [(D_1 - 1.5)^2 - (d + 2.5)^2]$ [kN]
NSA8148: $C_a = 0.16 \cdot [(D_1 - 1.5)^2 - (d + 2.5)^2]$ [kN]

NSA8147 / NSA8148 continued on pg 336. ►

Specifications

NSA8147 / NSA8148

Diameter Code	Length L -0.127 mm / -0.381 mm -0.0050 Inch / -0.0150 Inch													
	014		016		018		020		024		026		028	
	mm	Inch	mm	Inch	mm	Inch	mm	Inch	mm	Inch	mm	Inch	mm	Inch
04	11.110	0.4374	-	-	-	-	-	-	-	-	-	-	-	-
05	11.110	0.4374	12.700	0.5000	14.290	0.5626	-	-	-	-	-	-	-	-
06	11.110	0.4374	12.700	0.5000	14.290	0.5626	15.870	0.6248	-	-	-	-	-	-
07	11.110	0.4374	12.700	0.5000	14.290	0.5626	15.870	0.6248	19.050	0.7500	20.640	0.8126	-	-
08	11.110	0.4374	12.700	0.5000	14.290	0.5626	15.870	0.6248	19.050	0.7500	20.640	0.8126	22.220	0.8748
10	11.110	0.4374	12.700	0.5000	14.290	0.5626	15.870	0.6248	19.050	0.7500	20.640	0.8126	22.220	0.8748
12	11.110	0.4374	12.700	0.5000	14.290	0.5626	15.870	0.6248	19.050	0.7500	20.640	0.8126	22.220	0.8748
14	11.110	0.4374	12.700	0.5000	14.290	0.5626	15.870	0.6248	19.050	0.7500	20.640	0.8126	22.220	0.8748
16	11.110	0.4374	12.700	0.5000	14.290	0.5626	15.870	0.6248	19.050	0.7500	20.640	0.8126	22.220	0.8748
18	11.110	0.4374	12.700	0.5000	14.290	0.5626	15.870	0.6248	19.050	0.7500	20.640	0.8126	22.220	0.8748
20	11.110	0.4374	12.700	0.5000	14.290	0.5626	15.870	0.6248	19.050	0.7500	20.640	0.8126	22.220	0.8748
22	11.110	0.4374	12.700	0.5000	14.290	0.5626	15.870	0.6248	19.050	0.7500	20.640	0.8126	22.220	0.8748
24	11.110	0.4374	12.700	0.5000	14.290	0.5626	15.870	0.6248	19.050	0.7500	20.640	0.8126	22.220	0.8748
28	-	-	12.700	0.5000	14.290	0.5626	15.870	0.6248	19.050	0.7500	20.640	0.8126	22.220	0.8748
32	-	-	12.700	0.5000	14.290	0.5626	15.870	0.6248	19.050	0.7500	20.640	0.8126	22.220	0.8748

Specifications

NSA8147 / NSA8148

Diameter Code	Length L -0.127 mm / -0.381 mm -0.0050 Inch / -0.0150 Inch													
	032		040		044		048		064		080		096	
	mm	Inch	mm	Inch	mm	Inch	mm	Inch	mm	Inch	mm	Inch	mm	Inch
04	-	-	-	-	-	-	-	-	-	-	-	-	-	-
05	-	-	-	-	-	-	-	-	-	-	-	-	-	-
06	-	-	-	-	-	-	-	-	-	-	-	-	-	-
07	-	-	-	-	-	-	-	-	-	-	-	-	-	-
08	-	-	-	-	-	-	-	-	-	-	-	-	-	-
10	25.400	1.0000	31.750	1.2500	-	-	-	-	-	-	-	-	-	-
12	25.400	1.0000	31.750	1.2500	-	-	-	-	-	-	-	-	-	-
14	25.400	1.0000	31.750	1.2500	34.920	1.3748	-	-	-	-	-	-	-	-
16	25.400	1.0000	31.750	1.2500	34.920	1.3748	-	-	-	-	-	-	-	-
18	25.400	1.0000	31.750	1.2500	34.920	1.3748	38.100	1.5000	50.800	2.0000	-	-	-	-
20	25.400	1.0000	31.750	1.2500	34.920	1.3748	38.100	1.5000	50.800	2.0000	-	-	-	-
22	25.400	1.0000	31.750	1.2500	34.920	1.3748	38.100	1.5000	50.800	2.0000	63.500	2.5000	-	-
24	25.400	1.0000	31.750	1.2500	34.920	1.3748	38.100	1.5000	50.800	2.0000	63.500	2.5000	76.200	3.0000
28	25.400	1.0000	31.750	1.2500	34.920	1.3748	38.100	1.5000	50.800	2.0000	63.500	2.5000	76.200	3.0000
32	25.400	1.0000	31.750	1.2500	34.920	1.3748	38.100	1.5000	50.800	2.0000	63.500	2.5000	76.200	3.0000

Contact

USA: KAMATICS CORPORATION 1330 Blue Hills Avenue Bloomfield, CT 06002 USA | **Tel:** +1 860 243 9704 | **Email:** KSB@kaman.com
GERMANY: RWG GERMANY GmbH Medbacher Weg 1 D-91315 Höchstadt a. d. Aisch | **Tel:** +49 (91 93) 50105 100 | **E-Mail:** RWG@kaman.com

Journal Bearings

EN2288

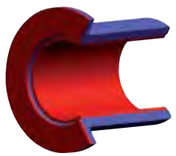

- Self-Lubricating
- CRES
- Flanged Type
- According to Specification EN2311 / SAE AS81934

Specifications

Diameter Code	d		Δ dmp		D		Δ Dmp		D_1	
									-0.250	-0.0098
	mm	Inch	mm	Inch	mm	Inch	mm	Inch	mm	Inch
06	6.000	0.2362	+0.004 to +0.022	+0.0002 to +0.0009	10.000	0.3937	+0.015 to +0.024	+0.0006 to +0.0009	12.000	0.4724
08	8.000	0.3150	+0.005 to +0.027	+0.0002 to +0.0011	12.000	0.4724	+0.018 to +0.029	+0.0007 to +0.0011	14.000	0.5512
10	10.000	0.3937	+0.005 to +0.027	+0.0002 to +0.0011	14.000	0.5512	+0.018 to +0.029	+0.0007 to +0.0011	16.000	0.6299
12	12.000	0.4724	+0.006 to +0.033	+0.0002 to +0.0013	16.000	0.6299	+0.018 to +0.029	+0.0007 to +0.0011	22.000	0.8661
15	15.000	0.5906	+0.006 to +0.033	+0.0002 to +0.0013	19.000	0.7480	+0.022 to +0.035	+0.0009 to +0.0014	25.000	0.9843
16	16.000	0.6299	+0.006 to +0.033	+0.0002 to +0.0013	20.000	0.7874	+0.022 to +0.035	+0.0009 to +0.0014	26.000	1.0236
18	18.000	0.7087	+0.006 to +0.033	+0.0002 to +0.0013	22.000	0.8661	+0.022 to +0.035	+0.0009 to +0.0014	28.000	1.1024
20	20.000	0.7874	+0.007 to +0.040	+0.0003 to +0.0016	25.000	0.9843	+0.022 to +0.035	+0.0009 to +0.0014	30.000	1.1811
22	22.000	0.8661	+0.007 to +0.040	+0.0003 to +0.0016	26.000	1.0236	+0.022 to +0.035	+0.0009 to +0.0014	32.000	1.2598
25	25.000	0.9843	+0.007 to +0.040	+0.0003 to +0.0016	30.000	1.1811	+0.022 to +0.035	+0.0009 to +0.0014	35.000	1.3780
28	28.000	1.1024	+0.007 to +0.040	+0.0003 to +0.0016	34.000	1.3386	+0.026 to +0.042	+0.0010 to +0.0017	40.000	1.5748
30	30.000	1.1811	+0.007 to +0.040	+0.0003 to +0.0016	36.000	1.4173	+0.026 to +0.042	+0.0010 to +0.0017	42.000	1.6535
32	32.000	1.2598	+0.009 to +0.048	+0.0004 to +0.0019	38.000	1.4961	+0.026 to +0.042	+0.0010 to +0.0017	44.000	1.7323
35	35.000	1.3780	+0.009 to +0.048	+0.0004 to +0.0019	42.000	1.6535	+0.026 to +0.042	+0.0010 to +0.0017	47.000	1.8504
36	36.000	1.4173	+0.009 to +0.048	+0.0004 to +0.0019	43.000	1.6929	+0.026 to +0.042	+0.0010 to +0.0017	48.000	1.8898
38	38.000	1.4961	+0.009 to +0.048	+0.0004 to +0.0019	45.000	1.7717	+0.026 to +0.042	+0.0010 to +0.0017	50.000	1.9685
40	40.000	1.5748	+0.009 to +0.048	+0.0004 to +0.0019	48.000	1.8898	+0.026 to +0.042	+0.0010 to +0.0017	52.000	2.0472
45	45.000	1.7717	+0.009 to +0.048	+0.0004 to +0.0019	52.000	2.0472	+0.032 to +0.051	+0.0013 to +0.0020	57.000	2.2441
50	50.000	1.9685	+0.009 to +0.048	+0.0004 to +0.0019	58.000	2.2835	+0.032 to +0.051	+0.0013 to +0.0020	62.000	2.4409

Designation

EN2288	12	08	A
Number of Standard	Diameter Code	Length Code	Bonded Liner Technology

Part Number Example
EN2288 12 08 A

Bearing Materials:

Material
EN3490 / 1.4044.6 / AISI 431

Liner
FRASLIP F per EN2311 / SAE AS81934

Technical Specification
EN2311 / SAE AS81934

** Inch dimensions are for reference only. | * Permanently marked in non-functional area.*

Schematic Drawing

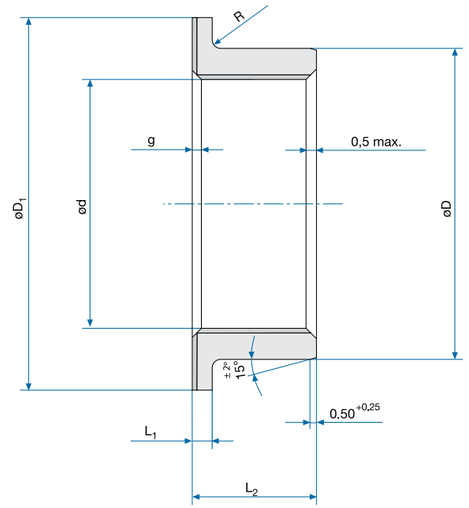

Specifications

EN2288

Diameter Code	g x 45°		L_1		R		Length L_2 -0.100 mm / -0.400 mm -0.0039 Inch / -0.0157 Inch					
			-0.150	-0.0059			06		08		10	
	mm	Inch	mm	Inch	mm	Inch	mm	Inch	mm	Inch	mm	Inch
06	0.650 to 0.900	0.0256 to 0.0354	1.500	0.0591	0.100 to 0.400	0.0039 to 0.0157	6.000	0.2362	-	-	-	-
08	0.650 to 0.900	0.0256 to 0.0354	1.500	0.0591	0.100 to 0.400	0.0039 to 0.0157	6.000	0.2362	8.000	0.3150	-	-
10	0.650 to 0.900	0.0256 to 0.0354	1.500	0.0591	0.100 to 0.400	0.0039 to 0.0157	6.000	0.2362	8.000	0.3150	10.000	0.3937
12	0.650 to 0.900	0.0256 to 0.0354	1.500	0.0591	0.500 to 0.800	0.0197 to 0.0315	6.000	0.2362	8.000	0.3150	10.000	0.3937
15	0.650 to 0.900	0.0256 to 0.0354	1.500	0.0591	0.500 to 0.800	0.0197 to 0.0315	-	-	8.000	0.3150	10.000	0.3937
16	0.650 to 0.900	0.0256 to 0.0354	1.500	0.0591	0.500 to 0.800	0.0197 to 0.0315	-	-	8.000	0.3150	10.000	0.3937
18	0.650 to 0.900	0.0256 to 0.0354	1.500	0.0591	0.500 to 0.800	0.0197 to 0.0315	-	-	-	-	10.000	0.3937
20	0.950 to 1.200	0.0374 to 0.0472	1.500	0.0591	0.500 to 0.800	0.0197 to 0.0315	-	-	-	-	10.000	0.3937
22	0.950 to 1.200	0.0374 to 0.0472	1.500	0.0591	0.500 to 0.800	0.0197 to 0.0315	-	-	-	-	-	-
25	0.950 to 1.200	0.0374 to 0.0472	1.500	0.0591	0.500 to 0.800	0.0197 to 0.0315	-	-	-	-	-	-
28	0.950 to 1.200	0.0374 to 0.0472	2.500	0.0984	0.500 to 0.800	0.0197 to 0.0315	-	-	-	-	-	-
30	0.950 to 1.200	0.0374 to 0.0472	2.500	0.0984	0.500 to 0.800	0.0197 to 0.0315	-	-	-	-	-	-
32	0.950 to 1.200	0.0374 to 0.0472	2.500	0.0984	0.500 to 0.800	0.0197 to 0.0315	-	-	-	-	-	-
35	0.950 to 1.200	0.0374 to 0.0472	2.500	0.0984	0.500 to 0.800	0.0197 to 0.0315	-	-	-	-	-	-
36	0.950 to 1.200	0.0374 to 0.0472	2.500	0.0984	0.500 to 0.800	0.0197 to 0.0315	-	-	-	-	-	-
38	0.950 to 1.200	0.0374 to 0.0472	2.500	0.0984	0.500 to 0.800	0.0197 to 0.0315	-	-	-	-	-	-
40	0.950 to 1.200	0.0374 to 0.0472	2.500	0.0984	0.500 to 0.800	0.0197 to 0.0315	-	-	-	-	-	-
45	0.950 to 1.200	0.0374 to 0.0472	2.500	0.0984	0.500 to 0.800	0.0197 to 0.0315	-	-	-	-	-	-
50	0.950 to 1.200	0.0374 to 0.0472	2.500	0.0984	0.500 to 0.800	0.0197 to 0.0315	-	-	-	-	-	-

NOTES

Static Radial Limit Load:
$C_s = 0.43 \cdot d \cdot (L_2 - 1.2 - R_{max.} - L_1)$ [kN]

Static Axial Limit Load:
$C_a = 0.34 \cdot (D_1 - 1.5)^2 - (d + 2.5)^2$ [kN]

EN2288 continued on pg 340. ►

Specifications

EN2288

Diameter Code	Length L -0.100 mm / -0.400 mm -0.0039 Inch / -0.0157 Inch															
	012		015		016		018		020		022		025		028	
	mm	Inch	mm	Inch	mm	Inch	mm	Inch	mm	Inch	mm	Inch	mm	Inch	mm	Inch
06	-	-	-	-	-	-	-	-	-	-	-	-	-	-	-	-
08	-	-	-	-	-	-	-	-	-	-	-	-	-	-	-	-
10	-	-	-	-	-	-	-	-	-	-	-	-	-	-	-	-
12	12.000	0.4724	-	-	-	-	-	-	-	-	-	-	-	-	-	-
15	12.000	0.4724	15.000	0.5906	16.000	0.6299	-	-	-	-	-	-	-	-	-	-
16	12.000	0.4724	15.000	0.5906	16.000	0.6299	18.000	0.7087	-	-	-	-	-	-	-	-
18	12.000	0.4724	15.000	0.5906	16.000	0.6299	18.000	0.7087	20.000	0.7874	-	-	-	-	-	-
20	12.000	0.4724	15.000	0.5906	16.000	0.6299	18.000	0.7087	20.000	0.7874	22.000	0.8661	-	-	-	-
22	12.000	0.4724	15.000	0.5906	16.000	0.6299	18.000	0.7087	20.000	0.7874	22.000	0.8661	-	-	-	-
25	12.000	0.4724	15.000	0.5906	16.000	0.6299	18.000	0.7087	20.000	0.7874	22.000	0.8661	25.000	0.9843	-	-
28	-	-	15.000	0.5906	16.000	0.6299	18.000	0.7087	20.000	0.7874	22.000	0.8661	25.000	0.9843	28.000	1.1024
30	-	-	15.000	0.5906	16.000	0.6299	18.000	0.7087	20.000	0.7874	22.000	0.8661	25.000	0.9843	28.000	1.1024
32	-	-	15.000	0.5906	16.000	0.6299	18.000	0.7087	20.000	0.7874	22.000	0.8661	25.000	0.9843	28.000	1.1024
35	-	-	-	-	16.000	0.6299	18.000	0.7087	20.000	0.7874	22.000	0.8661	25.000	0.9843	28.000	1.1024
36	-	-	-	-	-	-	18.000	0.7087	20.000	0.7874	22.000	0.8661	25.000	0.9843	28.000	1.1024
38	-	-	-	-	-	-	-	-	20.000	0.7874	22.000	0.8661	25.000	0.9843	28.000	1.1024
40	-	-	-	-	-	-	-	-	20.000	0.7874	22.000	0.8661	25.000	0.9843	28.000	1.1024
45	-	-	-	-	-	-	-	-	-	-	22.000	0.8661	25.000	0.9843	28.000	1.1024
50	-	-	-	-	-	-	-	-	-	-	-	-	25.000	0.9843	28.000	1.1024

Specifications

EN2288

Diameter Code	Length L -0.100 mm / -0.400 mm -0.0039 Inch / -0.0157 Inch															
	030		032		035		036		038		040		045		050	
	mm	Inch	mm	Inch	mm	Inch	mm	Inch	mm	Inch	mm	Inch	mm	Inch	mm	Inch
06	-	-	-	-	-	-	-	-	-	-	-	-	-	-	-	-
08	-	-	-	-	-	-	-	-	-	-	-	-	-	-	-	-
10	-	-	-	-	-	-	-	-	-	-	-	-	-	-	-	-
12	-	-	-	-	-	-	-	-	-	-	-	-	-	-	-	-
15	-	-	-	-	-	-	-	-	-	-	-	-	-	-	-	-
16	-	-	-	-	-	-	-	-	-	-	-	-	-	-	-	-
18	-	-	-	-	-	-	-	-	-	-	-	-	-	-	-	-
20	-	-	-	-	-	-	-	-	-	-	-	-	-	-	-	-
22	-	-	-	-	-	-	-	-	-	-	-	-	-	-	-	-
25	-	-	-	-	-	-	-	-	-	-	-	-	-	-	-	-
28	-	-	-	-	-	-	-	-	-	-	-	-	-	-	-	-
30	30.000	1.1811	-	-	-	-	-	-	-	-	-	-	-	-	-	-
32	30.000	1.1811	32.000	1.2598	-	-	-	-	-	-	-	-	-	-	-	-
35	30.000	1.1811	32.000	1.2598	35.000	1.3780	-	-	-	-	-	-	-	-	-	-
36	30.000	1.1811	32.000	1.2598	35.000	1.3780	36.000	1.4173	-	-	-	-	-	-	-	-
38	30.000	1.1811	32.000	1.2598	35.000	1.3780	36.000	1.4173	38.000	1.4961	-	-	-	-	-	-
40	30.000	1.1811	32.000	1.2598	35.000	1.3780	36.000	1.4173	38.000	1.4961	40.000	1.5748	-	-	-	-
45	30.000	1.1811	32.000	1.2598	35.000	1.3780	36.000	1.4173	38.000	1.4961	40.000	1.5748	45.000	1.7717	-	-
50	30.000	1.1811	32.000	1.2598	35.000	1.3780	36.000	1.4173	38.000	1.4961	40.000	1.5748	45.000	1.7717	50.000	1.9685

Contact

USA: KAMATICS CORPORATION 1330 Blue Hills Avenue Bloomfield, CT 06002 USA | **Tel:** +1 860 243 9704 | **Email:** KSB@kaman.com
GERMANY: RWG GERMANY GmbH Medbacher Weg 1 D-91315 Höchstadt a. d. Aisch | **Tel:** +49 (91 93) 50105 100 | **E-Mail:** RWG@kaman.com

Journal Bearings

EN2286

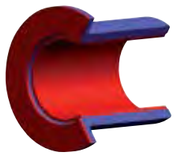

- Self-Lubricating
- Aluminum
- Flanged Type
- According to Specification EN2311 / SAE AS81934

Specifications

Diameter Code	d		Δ dmp		D		Δ Dmp		D_1	
									-0.250	-0.0098
	mm	Inch	mm	Inch	mm	Inch	mm	Inch	mm	Inch
06	6.000	0.2362	-0.004 to -0.022	-0.0002 to -0.0009	10.000	0.3937	-0.015 to -0.024	-0.0006 to -0.0009	12.000	0.4724
08	8.000	0.3150	-0.005 to -0.027	-0.0002 to -0.0011	12.000	0.4724	-0.018 to -0.029	-0.0007 to -0.0011	14.000	0.5512
10	10.000	0.3937	-0.005 to -0.027	-0.0002 to -0.0011	14.000	0.5512	-0.018 to -0.029	-0.0007 to -0.0011	16.000	0.6299
12	12.000	0.4724	-0.006 to -0.033	-0.0002 to -0.0013	16.000	0.6299	-0.018 to -0.029	-0.0007 to -0.0011	22.000	0.8661
15	15.000	0.5906	-0.006 to -0.033	-0.0002 to -0.0013	19.000	0.7480	-0.022 to -0.035	-0.0009 to -0.0014	25.000	0.9843
16	16.000	0.6299	-0.006 to -0.033	-0.0002 to -0.0013	20.000	0.7874	-0.022 to -0.035	-0.0009 to -0.0014	26.000	1.0236
18	18.000	0.7087	-0.006 to -0.033	-0.0002 to -0.0013	22.000	0.8661	-0.022 to -0.035	-0.0009 to -0.0014	28.000	1.1024
20	20.000	0.7874	-0.007 to -0.040	-0.0003 to -0.0016	25.000	0.9843	-0.022 to -0.035	-0.0009 to -0.0014	30.000	1.1811
22	22.000	0.8661	-0.007 to -0.040	-0.0003 to -0.0016	26.000	1.0236	-0.022 to -0.035	-0.0009 to -0.0014	32.000	1.2598
25	25.000	0.9843	-0.007 to -0.040	-0.0003 to -0.0016	30.000	1.1811	-0.022 to -0.035	-0.0009 to -0.0014	35.000	1.3780
28	28.000	1.1024	-0.007 to -0.040	-0.0003 to -0.0016	34.000	1.3386	-0.026 to -0.042	-0.0010 to -0.0017	40.000	1.5748
30	30.000	1.1811	-0.007 to -0.040	-0.0003 to -0.0016	36.000	1.4173	-0.026 to -0.042	-0.0010 to -0.0017	42.000	1.6535
32	32.000	1.2598	-0.009 to -0.048	-0.0004 to -0.0019	38.000	1.4961	-0.026 to -0.042	-0.0010 to -0.0017	44.000	1.7323
35	35.000	1.3780	-0.009 to -0.048	-0.0004 to -0.0019	42.000	1.6535	-0.026 to -0.042	-0.0010 to -0.0017	47.000	1.8504
36	36.000	1.4173	-0.009 to -0.048	-0.0004 to -0.0019	43.000	1.6929	-0.026 to -0.042	-0.0010 to -0.0017	48.000	1.8898
38	38.000	1.4961	-0.009 to -0.048	-0.0004 to -0.0019	45.000	1.7717	-0.026 to -0.042	-0.0010 to -0.0017	50.000	1.9685
40	40.000	1.5748	-0.009 to -0.048	-0.0004 to -0.0019	48.000	1.8898	-0.026 to -0.042	-0.0010 to -0.0017	52.000	2.0472
45	45.000	1.7717	-0.009 to -0.048	-0.0004 to -0.0019	52.000	2.0472	-0.032 to -0.051	-0.0013 to -0.0020	57.000	2.2441
50	50.000	1.9685	-0.009 to -0.048	-0.0004 to -0.0019	58.000	2.2835	-0.032 to -0.051	-0.0013 to -0.0020	62.000	2.4409

Designation

EN2286	-12	08	A
Number of Standard	Diameter Code	Length Code	Bonded Liner Technology

Part Number Example
EN2286 12 08 A

Bearing Materials:

Material
EN2086 / 3.1924/ Alloy 2618A; Anodized

Liner
FRASLIP F per EN2311 / SAE AS81934

Technical Specification
EN2311 / SAE AS81934

** Inch dimensions are for reference only. | * Permanently marked in non-functional area.*

Schematic Drawing

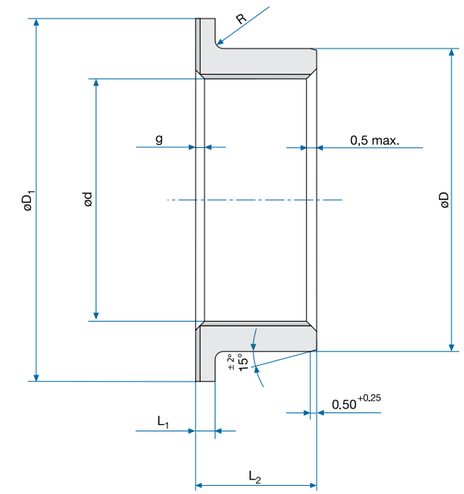

Specifications

EN2286

Diameter Code	g x 45°		L_1		R		Length L_2 -0.100 mm / -0.400 mm -0.0039 Inch / -0.0157 Inch					
							06		08		10	
	mm	Inch	mm	Inch	mm	Inch	mm	Inch	mm	Inch	mm	Inch
06	0.650 to 0.900	0.0256 to 0.0354	1.500	0.0591	0.100 to 0.400	0.0039 to 0.0157	6.000	0.2362	-	-	-	-
08	0.650 to 0.900	0.0256 to 0.0354	1.500	0.0591	0.100 to 0.400	0.0039 to 0.0157	6.000	0.2362	8.000	0.3150	-	-
10	0.650 to 0.900	0.0256 to 0.0354	1.500	0.0591	0.100 to 0.400	0.0039 to 0.0157	6.000	0.2362	8.000	0.3150	10.000	0.3937
12	0.650 to 0.900	0.0256 to 0.0354	1.500	0.0591	0.500 to 0.800	0.0197 to 0.0315	6.000	0.2362	8.000	0.3150	10.000	0.3937
15	0.650 to 0.900	0.0256 to 0.0354	1.500	0.0591	0.500 to 0.800	0.0197 to 0.0315	-	-	8.000	0.3150	10.000	0.3937
16	0.650 to 0.900	0.0256 to 0.0354	1.500	0.0591	0.500 to 0.800	0.0197 to 0.0315	-	-	8.000	0.3150	10.000	0.3937
18	0.650 to 0.900	0.0256 to 0.0354	1.500	0.0591	0.500 to 0.800	0.0197 to 0.0315	-	-	-	-	10.000	0.3937
20	0.950 to 1.200	0.0374 to 0.0472	1.500	0.0591	0.500 to 0.800	0.0197 to 0.0315	-	-	-	-	10.000	0.3937
22	0.950 to 1.200	0.0374 to 0.0472	1.500	0.0591	0.500 to 0.800	0.0197 to 0.0315	-	-	-	-	-	-
25	0.950 to 1.200	0.0374 to 0.0472	1.500	0.0591	0.500 to 0.800	0.0197 to 0.0315	-	-	-	-	-	-
28	0.950 to 1.200	0.0374 to 0.0472	2.500	0.0984	0.500 to 0.800	0.0197 to 0.0315	-	-	-	-	-	-
30	0.950 to 1.200	0.0374 to 0.0472	2.500	0.0984	0.500 to 0.800	0.0197 to 0.0315	-	-	-	-	-	-
32	0.950 to 1.200	0.0374 to 0.0472	2.500	0.0984	0.500 to 0.800	0.0197 to 0.0315	-	-	-	-	-	-
35	0.950 to 1.200	0.0374 to 0.0472	2.500	0.0984	0.500 to 0.800	0.0197 to 0.0315	-	-	-	-	-	-
36	0.950 to 1.200	0.0374 to 0.0472	2.500	0.0984	0.500 to 0.800	0.0197 to 0.0315	-	-	-	-	-	-
38	0.950 to 1.200	0.0374 to 0.0472	2.500	0.0984	0.500 to 0.800	0.0197 to 0.0315	-	-	-	-	-	-
40	0.950 to 1.200	0.0374 to 0.0472	2.500	0.0984	0.500 to 0.800	0.0197 to 0.0315	-	-	-	-	-	-
45	0.950 to 1.200	0.0374 to 0.0472	2.500	0.0984	0.500 to 0.800	0.0197 to 0.0315	-	-	-	-	-	-
50	0.950 to 1.200	0.0374 to 0.0472	2.500	0.0984	0.500 to 0.800	0.0197 to 0.0315	-	-	-	-	-	-

NOTES

Static Radial Limit Load:
$C_s = 0.206 \cdot d \cdot (L_2 - 1.2 - R_{max.} - L_1)$ [kN]

Static Axial Limit Load:
$C_a = 0.16 \cdot (D_1 - 1.5)^2 - (d + 2.5)^2$ [kN]

EN2286 continued on pg 344. ►

Specifications

EN2286

Diameter Code	Length L -0.100 mm / -0.400 mm -0.0039 Inch / -0.0157 Inch															
	012		015		016		018		020		022		025		028	
	mm	Inch	mm	Inch	mm	Inch	mm	Inch	mm	Inch	mm	Inch	mm	Inch	mm	Inch
06	-	-	-	-	-	-	-	-	-	-	-	-	-	-	-	-
08	-	-	-	-	-	-	-	-	-	-	-	-	-	-	-	-
10	-	-	-	-	-	-	-	-	-	-	-	-	-	-	-	-
12	12.000	0.4724	-	-	-	-	-	-	-	-	-	-	-	-	-	-
15	12.000	0.4724	15.000	0.5906	16.000	0.6299	-	-	-	-	-	-	-	-	-	-
16	12.000	0.4724	15.000	0.5906	16.000	0.6299	18.000	0.7087	-	-	-	-	-	-	-	-
18	12.000	0.4724	15.000	0.5906	16.000	0.6299	18.000	0.7087	20.000	0.7874	-	-	-	-	-	-
20	12.000	0.4724	15.000	0.5906	16.000	0.6299	18.000	0.7087	20.000	0.7874	22.000	0.8661	-	-	-	-
22	12.000	0.4724	15.000	0.5906	16.000	0.6299	18.000	0.7087	20.000	0.7874	22.000	0.8661	-	-	-	-
25	12.000	0.4724	15.000	0.5906	16.000	0.6299	18.000	0.7087	20.000	0.7874	22.000	0.8661	25.000	0.9843	-	-
28	-	-	15.000	0.5906	16.000	0.6299	18.000	0.7087	20.000	0.7874	22.000	0.8661	25.000	0.9843	28.000	1.1024
30	-	-	15.000	0.5906	16.000	0.6299	18.000	0.7087	20.000	0.7874	22.000	0.8661	25.000	0.9843	28.000	1.1024
32	-	-	15.000	0.5906	16.000	0.6299	18.000	0.7087	20.000	0.7874	22.000	0.8661	25.000	0.9843	28.000	1.1024
35	-	-	-	-	16.000	0.6299	18.000	0.7087	20.000	0.7874	22.000	0.8661	25.000	0.9843	28.000	1.1024
36	-	-	-	-	-	-	18.000	0.7087	20.000	0.7874	22.000	0.8661	25.000	0.9843	28.000	1.1024
38	-	-	-	-	-	-	-	-	20.000	0.7874	22.000	0.8661	25.000	0.9843	28.000	1.1024
40	-	-	-	-	-	-	-	-	20.000	0.7874	22.000	0.8661	25.000	0.9843	28.000	1.1024
45	-	-	-	-	-	-	-	-	-	-	22.000	0.8661	25.000	0.9843	28.000	1.1024
50	-	-	-	-	-	-	-	-	-	-	-	-	25.000	0.9843	28.000	1.1024

Specifications

EN2286

Diameter Code	Length L -0.100 mm / -0.400 mm -0.0039 Inch / -0.0157 Inch															
	030		032		035		036		038		040		045		050	
	mm	Inch	mm	Inch	mm	Inch	mm	Inch	mm	Inch	mm	Inch	mm	Inch	mm	Inch
06	-	-	-	-	-	-	-	-	-	-	-	-	-	-	-	-
08	-	-	-	-	-	-	-	-	-	-	-	-	-	-	-	-
10	-	-	-	-	-	-	-	-	-	-	-	-	-	-	-	-
12	-	-	-	-	-	-	-	-	-	-	-	-	-	-	-	-
15	-	-	-	-	-	-	-	-	-	-	-	-	-	-	-	-
16	-	-	-	-	-	-	-	-	-	-	-	-	-	-	-	-
18	-	-	-	-	-	-	-	-	-	-	-	-	-	-	-	-
20	-	-	-	-	-	-	-	-	-	-	-	-	-	-	-	-
22	-	-	-	-	-	-	-	-	-	-	-	-	-	-	-	-
25	-	-	-	-	-	-	-	-	-	-	-	-	-	-	-	-
28	-	-	-	-	-	-	-	-	-	-	-	-	-	-	-	-
30	30.000	1.1811	-	-	-	-	-	-	-	-	-	-	-	-	-	-
32	30.000	1.1811	32.000	1.2598	-	-	-	-	-	-	-	-	-	-	-	-
35	30.000	1.1811	32.000	1.2598	35.000	1.3780	-	-	-	-	-	-	-	-	-	-
36	30.000	1.1811	32.000	1.2598	35.000	1.3780	36.000	1.4173	-	-	-	-	-	-	-	-
38	30.000	1.1811	32.000	1.2598	35.000	1.3780	36.000	1.4173	38.000	1.4961	-	-	-	-	-	-
40	30.000	1.1811	32.000	1.2598	35.000	1.3780	36.000	1.4173	38.000	1.4961	40.000	1.5748	-	-	-	-
45	30.000	1.1811	32.000	1.2598	35.000	1.3780	36.000	1.4173	38.000	1.4961	40.000	1.5748	45.000	1.7717	-	-
50	30.000	1.1811	32.000	1.2598	35.000	1.3780	36.000	1.4173	38.000	1.4961	40.000	1.5748	45.000	1.7717	50.000	1.9685

Contact

USA: KAMATICS CORPORATION 1330 Blue Hills Avenue Bloomfield, CT 06002 USA | **Tel:** +1 860 243 9704 | **Email:** KSB@kaman.com
GERMANY: RWG GERMANY GmbH Medbacher Weg 1 D-91315 Höchstadt a. d. Aisch | **Tel:** +49 (91 93) 50105 100 | **E-Mail:** RWG@kaman.com

Journal Bearings

KRJ Series / MIL-B-81934

- Sleeve
- Non-Flanged
- Lined Bore
- Qualified to SAE AS81934/1 with KAron B
- AS8943 with KAron V

Schematic Drawing

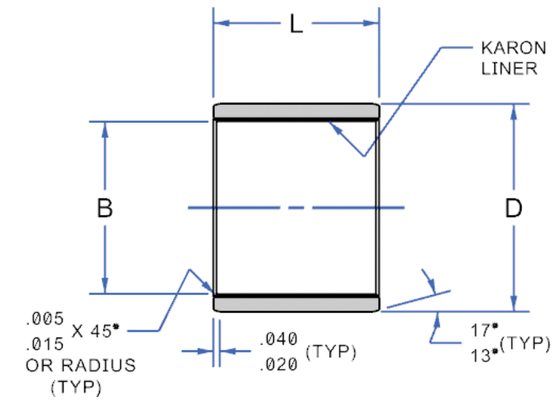

Specifications

Bearing Numbers	B Bore Dia		D Outer Dia		T 0.010 O' Size Dia D		U 0.020 O' Size Dia D	
	+0.0000 –0.0010	+0.000 –0.025	See Note 1		See Note 1		See Note 1	
	Inch	mm	Inch	mm	Inch	mm	Inch	mm
KRJ4	0.2515	6.388	0.3760	9.550	0.3860	9.804	0.3960	10.058
KRJ5	0.3140	7.976	0.4386	11.140	0.4486	11.394	0.4586	11.648
KRJ6	0.3765	9.563	0.5012	12.730	0.5112	12.984	0.5212	13.238
KRJ7	0.4390	11.151	0.5638	14.321	0.5738	14.575	0.5838	14.829
KRJ8	0.5015	12.738	0.6265	15.913	0.6365	16.167	0.6465	16.421
KRJ9	0.5640	14.326	0.6892	17.506	0.6992	17.760	0.7092	18.014
KRJ10	0.6265	15.913	0.8142	20.681	0.8242	20.935	0.8342	21.189
KRJ11	0.6890	17.501	0.8767	22.268	0.8867	22.522	0.8967	22.776
KRJ12	0.7515	19.088	0.9393	23.858	0.9493	24.112	0.9593	24.366
KRJ14	0.8765	22.263	1.0645	27.038	1.0745	27.292	1.0845	27.546
KRJ16	1.0015	25.438	1.1898	30.221	1.1998	30.475	1.2098	30.729
KRJ18	1.1265	28.613	1.3148	33.396	1.3248	33.650	1.3348	33.904
KRJ20	1.2515	31.788	1.4398	36.571	1.4498	36.825	1.4598	37.079
KRJ22	1.3765	34.963	1.5648	39.746	1.5748	40.000	1.5848	40.254
KRJ24	1.5015	38.138	1.7523	44.508	1.7623	44.762	1.7723	45.016
KRJ26	1.6265	41.313	1.8773	47.683	1.8873	47.937	1.8973	48.191
KRJ28	1.7515	44.488	2.0023	50.858	2.0123	51.112	2.0223	51.366
KRJ32	2.0015	50.838	2.2523	57.208	2.2623	57.462	2.2723	57.716

Specifications

KRJ Series / MIL-B-81934

Bearing Numbers	L Mil Spec Length Limits (Suggested)		Weight AL		Weight CRES	
	Min	Max	Lbs/inch	grams/mm	Lbs/inch	grams/mm
KRJ4	005	014	0.0060	0.107	0.0160	0.286
KRJ5	005	018	0.0070	0.125	0.0190	0.339
KRJ6	005	022	0.0080	0.143	0.0220	0.393
KRJ7	005	028	0.0090	0.161	0.0250	0.447
KRJ8	005	028	0.0110	0.196	0.0280	0.500
KRJ9	005	036	0.0120	0.214	0.0310	0.554
KRJ10	005	044	0.0210	0.375	0.0560	1.000
KRJ11	008	052	0.0220	0.393	0.0600	1.072
KRJ12	008	052	0.0240	0.429	0.0650	1.161
KRJ14	008	052	0.0280	0.500	0.0750	1.340
KRJ16	008	060	0.0310	0.554	0.0840	1.500
KRJ18	010	060	0.0350	0.625	0.0940	1.679
KRJ20	012	068	0.0380	0.679	0.1030	1.840
KRJ22	012	068	0.0410	0.732	0.1130	2.018
KRJ24	012	088	0.0620	1.107	0.1710	3.054
KRJ26	016	096	0.0670	1.197	0.1830	3.268
KRJ28	016	096	0.0710	1.268	0.1960	3.501
KRJ32	016	096	0.0810	1.447	0.2220	3.965

NOTES:

1. Tolerance: CRES ("S") = +.0000, -.0005 Aluminum ("Y") = +.0005, -.0005
2. For Load Ratings See Page (TBD)
3. 3. Aluminum Bearings Anodized per MIL-A 8625 or Chem Film per MIL-C-5541

KRJ Series continued on pg 348. ►

KRJ Series / MIL-B-81934

Code	Length Suffix	
	+0.0000 −0.0100	+0.000 −0.254
	Inch	mm
-005	0.156	3.962
-006	0.187	4.750
-007	0.218	5.537
-008	0.2500	6.350
-009	0.2810	7.137
-010	0.3120	7.925
-011	0.3440	8.738
-012	0.3750	9.525
-014	0.4370	11.100
-016	0.5000	12.700
-018	0.5620	14.275
-020	0.6250	15.875
-022	0.6870	17.450
-024	0.7500	19.050
-026	0.8120	20.625
-028	0.8750	22.225
-030	0.9370	23.800
-032	1.0000	25.400
-034	1.0620	26.975
-036	1.1250	28.575
-038	1.1870	30.150
-040	1.2500	31.750
-042	1.3120	33.325
-044	1.3750	34.925
-046	1.4370	36.500
-048	1.5000	38.100
-050	1.5620	39.675
-052	1.6250	41.275
-054	1.6870	42.850
-056	1.7500	44.450
-058	1.8120	46.025
-060	1.8750	47.625
-062	1.9370	49.200
-064	2.0000	50.800
-066	2.0620	52.375
-068	2.1250	53.975
-070	2.1870	55.550
-072	2.2500	57.150
-074	2.3120	58.725
-076	2.3750	60.325
-078	2.4370	61.900
-080	2.5000	63.500
-082	2.5620	65.075
-084	2.6250	66.675
-086	2.6870	68.250
-088	2.7500	69.850
-096	3.0000	76.200

Designation

KRJ
Number of Series
Basic Journal Part Number Prefix

8
0.5000" ID
(ID in 1/16 Inch Increments)

S
"S" for 17-4PH CRES Outer Housing ("Y" for Aluminum)

B
KAron B Liner
(See Table 2 For Liner Options)

C
Cad Plate
"C" for Cad Plate Per AMS-QQ-P-416 Type I CL 2 (For 17-4PH Only)

E
"E" for Zinc-Nickel Plate Per AMS 2417 Type 2 (For 17-4PH Only)

032
1.000" Long
(Length in 1/32 Inch Increments)

L
Undersize
"L" for .010± .001 Undersized
"B" Diameter for Reaming at Assy

T
Add "T" for .010 or "U" for .020 Oversize DIA "D"

Bearing Materials:

Outer Housing

Material
AMS 5643
17-4PH CRES

Condition
H1150

Surface Finish
Passivate Per Per AMS 2700 Cad Plate Per AMS-QQ-P-416 or Zinc-Nickel Plate per AMS 2417

P/N Symbol
S

Material
QQ-A-200/3 Or QQ-A-225/6
2024 Aluminum

Condition
T851/T8511

Surface Finish
Andozie Per MIL-A-8625 TYPE I Or II Or Chem Film Per MIL-C-5541

P/N Symbol
Y

Liner

Material
KAron

Condition
N/A

Surface Finish
N/A

P/N Symbol
See Table 2 for Liner Options

Part Number Example
KRJ 8-S B C - 032 - L T

** Millimeter dimensions are for reference only. | * Permanently marked in non-functional area.*

Contact

USA: KAMATICS CORPORATION 1330 Blue Hills Avenue Bloomfield, CT 06002 USA | **Tel:** +1 860 243 9704 | **E-mail:** KSB@kaman.com
GERMANY: RWG GERMANY GmbH Medbacher Weg 1 D-91315 Höchstadt a. d. Aisch | **Tel:** +49 (91 93) 50105 100 | **E-mail:** RWG@kaman.com

Journal Bearings

KRJ-U (D) Series / MIL-B-81934

- Sleeve
- Flanged
- Lined Bore (Optional Lined Flange)
- Qualified to SAE AS81934/2 with KAron B
- AS8943 with KAron V

Schematic Drawing

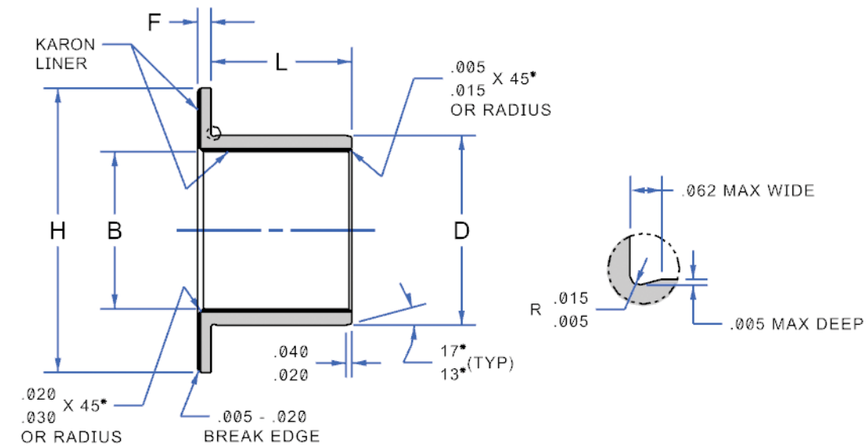

Specifications

Bearing Numbers	B Bore Dia		D Outer Dia		H Flange Dia		F Flange Width	
	+0.0000 –0.0010	+0.000 –0.025	See Note 1		+0.0000 –0.0200	+0.000 –0.508	+0.0000 –0.0050	+0.000 –0.127
	Inch	mm	Inch	mm	Inch	mm	Inch	mm
KRJ4-UD	0.2515	6.388	0.3760	9.550	0.7500	19.050	0.0625	1.588
KRJ5-UD	0.3140	7.976	0.4386	11.140	0.8120	20.625	0.0625	1.588
KRJ6-UD	0.3765	9.563	0.5012	12.730	0.8750	22.225	0.0625	1.588
KRJ7-UD	0.4390	11.151	0.5638	14.321	0.9370	23.800	0.0625	1.588
KRJ8-UD	0.5015	12.738	0.6265	15.913	1.0000	25.400	0.0625	1.588
KRJ9-UD	0.5640	14.326	0.6892	17.506	1.1250	28.575	0.0625	1.588
KRJ10-UD	0.6265	15.913	0.8142	20.681	1.2500	31.750	0.0625	1.588
KRJ11-UD	0.6890	17.501	0.8767	22.268	1.3750	34.925	0.0625	1.588
KRJ12-UD	0.7515	19.088	0.9393	23.858	1.5000	38.100	0.0625	1.588
KRJ14-UD	0.8765	22.263	1.0645	27.038	1.6250	41.275	0.0625	1.588
KRJ16-UD	1.0015	25.438	1.1898	30.221	1.7500	44.450	0.0625	1.588
KRJ18-UD	1.1265	28.613	1.3148	33.396	1.8750	47.625	0.0937	2.380
KRJ20-UD	1.2515	31.788	1.4398	36.571	2.0000	50.800	0.0937	2.380
KRJ22-UD	1.3765	34.963	1.5648	39.746	2.1250	53.975	0.0937	2.380
KRJ24-UD	1.5015	38.138	1.7523	44.508	2.2500	57.150	0.0937	2.380
KRJ26-UD	1.6265	41.313	1.8773	47.683	2.3750	60.325	0.0937	2.380
KRJ28-UD	1.7515	44.488	2.0023	50.858	2.5000	63.500	0.0937	2.380
KRJ32-UD	2.0015	50.838	2.2523	57.208	2.7500	69.850	0.0937	2.380

NOTES

1. Tolerance: CRES ("S") = +.0000, -.0005 Aluminum ("Y") = +.0005, -.0005
2. For Load Ratings See Page (TBD)
3. Aluminum Bearings Anodized per MIL-A 8625 or Chem Film per MIL-C-5541
4. Add this Weight to Journal Weight on page (TBD)

Specifications

KRJ Series / MIL-B-81934

Bearing Numbers	T 0.010 0' Size Dia D		U 0.020 0' Size Dia D		L		Flange Weight (Ref) Note 4			
	See Note 1		See Note 1		Mil Spec Length Limits (Suggested)		AL		CRES	
	Inch	mm	Inch	mm	Min	Max	Inch-lbs	grams	Inch-lbs	grams
KRJ4-UD	0.3860	9.804	0.3960	10.058	005	014	0.0020	0.907	0.0060	2.722
KRJ5-UD	0.4486	11.394	0.4586	11.648	005	018	0.0030	1.361	0.0070	3.175
KRJ6-UD	0.5112	12.984	0.5212	13.238	005	022	0.0030	1.361	0.0070	3.175
KRJ7-UD	0.5738	14.575	0.5838	14.829	005	028	0.0030	1.361	0.0080	3.629
KRJ8-UD	0.6365	16.167	0.6465	16.421	005	028	0.0030	1.361	0.0090	4.082
KRJ9-UD	0.6992	17.760	0.7092	18.014	005	036	0.0040	1.814	0.0110	4.990
KRJ10-UD	0.8242	20.935	0.8342	21.189	005	044	0.0050	2.268	0.0140	6.350
KRJ11-UD	0.8867	22.522	0.8967	22.776	008	052	0.0060	2.722	0.0160	7.258
KRJ12-UD	0.9493	24.112	0.9593	24.366	008	052	0.0070	3.175	0.0200	9.072
KRJ14-UD	1.0745	27.292	1.0845	27.546	008	052	0.0080	3.629	0.0220	9.979
KRJ16-UD	1.1998	30.475	1.2098	30.729	008	060	0.0090	4.082	0.0240	10.886
KRJ18-UD	1.3248	33.650	1.3348	33.904	010	060	0.0150	6.804	0.0410	18.598
KRJ20-UD	1.4498	36.825	1.4598	37.079	012	068	0.0160	7.258	0.0450	20.412
KRJ22-UD	1.5748	40.000	1.5848	40.254	012	068	0.0170	7.711	0.0480	21.773
KRJ24-UD	1.7623	44.762	1.7723	45.016	012	088	0.0180	8.165	0.0510	23.134
KRJ26-UD	1.8873	47.937	1.8973	48.191	016	096	0.0200	9.072	0.0550	24.948
KRJ28-UD	2.0123	51.112	2.0223	51.366	016	096	0.0210	9.526	0.0580	26.309
KRJ32-UD	2.2623	57.462	2.2723	57.716	016	096	0.0230	10.433	0.0650	29.484

KRJ-U (D) Series continued on pg 352. ►

KRJ–U (D) Series / MIL-B-81934

Code	Length Suffix	
	+0.0000 –0.0100	+0.000 –0.254
	Inch	mm
-005	0.1560	3.962
-006	0.1870	4.750
-007	0.2180	5.537
-008	0.2500	6.350
-009	0.2810	7.137
-010	0.3120	7.925
-011	0.3440	8.738
-012	0.3750	9.525
-014	0.4370	11.100
-016	0.5000	12.700
-018	0.5620	14.275
-020	0.6250	15.875
-022	0.6870	17.450
-024	0.7500	19.050
-026	0.8120	20.625
-028	0.8750	22.225
-030	0.9370	23.800
-032	1.0000	25.400
-034	1.0620	26.975
-036	1.1250	28.575
-038	1.1870	30.150
-040	1.2500	31.750
-042	1.3120	33.325
-044	1.3750	34.925
-046	1.4370	36.500
-048	1.5000	38.100
-050	1.5620	39.675
-052	1.6250	41.275
-054	1.6870	42.850
-056	1.7500	44.450
-058	1.8120	46.025
-060	1.8750	47.625
-062	1.9370	49.200
-064	2.0000	50.800
-066	2.0620	52.375
-068	2.1250	53.975
-070	2.1870	55.550
-072	2.2500	57.150
-074	2.3120	58.725
-076	2.3750	60.325
-078	2.4370	61.900
-080	2.5000	63.500
-082	2.5620	65.075
-084	2.6250	66.675
-086	2.6870	68.250
-088	2.7500	69.850
-096	3.0000	76.200

Designation

KRJ
Number of Series
Basic Journal Part
Number Prefix

8
0.5000" ID
(ID in 1/16 Inch Increments)

U
"U" Designates Flanged Journal Bearing

D
"D" for KAron Lined Flange

S
"S" for 17-4PH CRES Outer Housing ("Y" for Aluminum)

B
KAron B Liner
(See Table 2 For Liner Options)

C
Cad Plate
"C" for Cad Plate Per QQ-P-35 Type I CL 2 (For 17-4PH Only)

E
"E" for Zinc-Nickel Plate Per AMS 2417 Type 2 (For 17-4PH Only)

032
1.000" Long
(Length in 1/32 Inch Increments)

L
"L" for .010± .001 Undersized "B" Diameter for Reaming at Assy

T
Add "T" for .010 or "U" for .020 Oversize DIA "D"

Bearing Materials:

Outer Housing

Material
AMS 5643
17-4PH CRES

Condition
H1150

Surface Finish
Passivate Per AMS 2700 Cad Plate Per AMS-QQ-P-416 or Zinc-Nickel Plate per AMS 2417

P/N Symbol
S

Material
QQ-A-200/3 Or QQ-A-225/6
2024 Aluminum

Condition
T851/T8511

Surface Finish
Andozie Per MIL-A-8625 TYPE I Or II Or Chem Film Per MIL-C-5541

P/N Symbol
Y

Liner

Material
KAron

Condition
N/A

Surface Finish
N/A

P/N Symbol
See Table 2 for Liner Options

Part Number Example
KRJ 8- U D S B C - 032 - L T

** Millimeter dimensions are for reference only. | * Permanently marked in non-functional area.*

Contact

USA: KAMATICS CORPORATION 1330 Blue Hills Avenue Bloomfield, CT 06002 USA | **Tel:** +1 860 243 9704 | **E-mail:** KSB@kaman.com
GERMANY: RWG GERMANY GmbH Medbacher Weg 1 D-91315 Höchstadt a. d. Aisch | **Tel:** +49 (91 93) 50105 100 | **E-mail:** RWG@kaman.com

KAMATICS·RWG

Kaman Corporation
1330 Blue Hills Avenue
Bloomfield, Connecticut 06002
USA
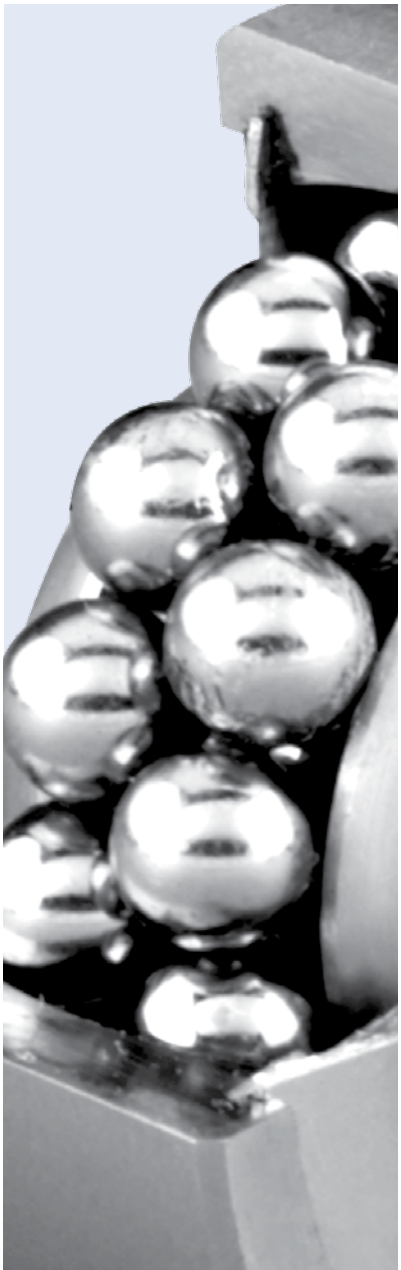
+1 860.243.9704
www.kaman.com/engineered